SL-HF950ES/E
RMT-223

SERVICE MANUAL

AEP Model
E Model

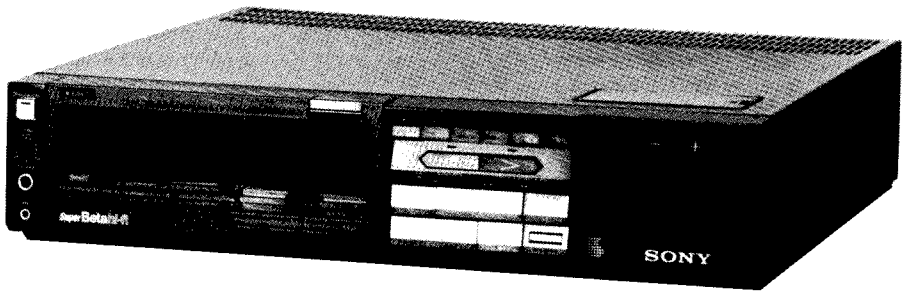

SuperBetahi-fi

September, 1985

CX CHASSIS

SPECIFICATIONS

System

Video recording system
Rotary two-head helical scanning

Audio recording system
Beta hi-fi PAL system (2 channels)
(Recording on the conventional audio track is monaural.)

Video signal
SL-HF950ES
CCIR standards, PAL and DDR SECAM colour
SL-HF950E
CCIR standards, PAL colour

Aerial input
75-ohm, asymmetrical aerial socket

Stereo/bilingual system (SL-HF950ES only)
West-German two-carrier system

Channel coverage
SL-HF950ES
VHF: Western European channels E2 - U20
UHF: Western European channels E21 - E68
(Up to 30 programmes can be preset.)
SL-HF950E
VHF: Western European channels E2 - E12
UHF: Western European channels E21 - E68
(Up to 30 programmes can be preset.)

RF output signal
UHF channels E30 to E39 (variable)
75 ohms, unbalanced

Video

Horizontal resolution
280 lines (Super Beta PRO mode)

Beta hi-fi PAL sound

Frequency response
20 Hz to 20 kHz (MPX FILTER OFF)

Wow and flutter
Less than 0.005 % WRMS

Dynamic range
More than 80 dB

Inputs and outputs

Video input
VIDEO IN: BNC connector
1.0 V (p-p) $^{+1.0}_{-0.5}$ V (p-p)
75 ohms, unbalanced, sync negative

Video output
VIDEO OUT: BNC connector
1.0 V (p-p) ±0.1 V (p-p)
75 ohms, unbalanced, sync negative

Audio inputs
AUDIO IN: 2 phono jacks
47 kilohms, −10 dBs
(0 dBs = 0.775 V rms)
Microphone: −60 dBs, for low-impedance microphone

— Continued on page 2 —

Beta
VIDEO CASSETTE RECORDER

SONY

MC-Service

Audio outputs AUDIO OUT : 2 phono jacks
Load impedance less than 10 kilohms
−10 dBs with 47 kilohms load, unbalanced
Headphones : Stereo phone jack
−26 dBs, 8 ohms
Video/audio output
21-pin EUROCONNECTOR
CONTROL S input
Minijack
CONTROL L input/output
5-pin connector

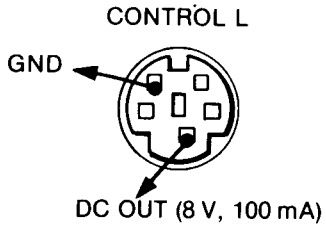

Tape transport
Tape speed 18.73 mm/sec.
Maximum recording time
2 hours 10 min. (with Sony L-500 cassette)
3 hours 15 min. (with L-750)
Fast forward/rewind time
Within 5 min. (with L-500)

Timer
Clock Crystal lock
Time indication
24-hour cycle
Timer setting Only for recording
6 events/3 weeks, adjustable for any day or for all 7 days of the week or for every week

General
Power requirements
110 - 240 V AC ± 10 %, 50/60 Hz
Power consumption
SL-HF950ES : 39 W
SL-HF950E : 36 W
Storage temperature
−20° C to +60° C (−4° F to +140° F)
Operating temperature
5° C to 40° C (41° F to 104° F)
Dimensions Approx. 430 × 95 × 405 mm (w/h/d)
(17 × 3 3/4 × 16 inches)
including projecting parts and controls
Weight Approx. 10.5 kg (23 lbs) net

Accessories supplied
Video cassette tape (1)
75-ohm coaxial cable for recorder to TV connection (1)
Remote Commander RMT-223 with two IEC designation R6 batteries (1)
RF channel adjustment screwdriver (1)

Design and specifications subject to change without notice.

Note
This appliance conforms with EEC Directives 76/889 and 82/499 regarding interference suppression.

SAFETY CHECK-OUT

After correcting the original service problem, perform the following safety checks before releasing the set to the customer:

1. Check the area of your repair for unsoldered or poorly-soldered connections. Check the entire board surface for solder splashes and bridges.
2. Check the interboard wiring to ensure that no wires are "pinched" or contact high-wattage resistors.
3. Look for unauthorized replacement parts, particularly transistors, that were installed during a previous repair. Point them out to the customer and recommend their replacement.
4. Look for parts which, though functioning, show obvious signs of deterioration. Point them out to the customer and recommend their replacement.
5. Check the B+ voltage to see it is at the values specified.

SAFETY-RELATED COMPONENT WARNING !!

COMPONENTS IDENTIFIED BY SHADING AND MARK ⚠ ON THE SCHEMATIC DIAGRAMS, EXPLODED VIEWS AND IN THE PARTS LIST ARE CRITICAL TO SAFE OPERATION. REPLACE THESE COMPONENTS WITH SONY PARTS WHOSE PART NUMBERS APPEAR AS SHOWN IN THIS MANUAL OR IN SUPPLEMENTS PUBLISHED BY SONY. CIRCUIT ADJUSTMENTS THAT ARE CRITICAL TO SAFE OPERATION ARE IDENTIFIED IN THIS MANUAL. FOLLOW THESE PROCEDURES WHENEVER CRITICAL COMPONENTS ARE REPLACED OR IMPROPER OPERATION IS SUSPECTED.

TABLE OF CONTENTS

Section	Title	Page
1.	**GENERAL**	
1-1.	Precautions	5
1-2.	Technical Information	6
1-3.	Location and Function of Controls	8
1-4.	On-Screen Display	13
1-5.	Cassette Insertion	15
1-6.	TV Programme Recording (Beta hi-fi recording)	16
1-7.	Playback	18
1-8.	Use of the Time Counter	21
1-9.	Index Function	22
1-10.	Timer-Activated Recording	25
1-11.	Tape Editing	28
1-12.	TV Station Programming	31
1-13.	Clock Setting	32
2.	**DISASSEMBLY**	
2-1.	Disassembly of Cabinet	35
2-2.	Removal of the TA-36/37 Board	36
2-3.	Removal of the SS-50 Board	36
2-4.	Removal of the YC-40 Board	37
2-5.	Removal of the FR-20 Board	37
2-6.	Removal of the FL-8, FL-9 Boards	38
2-7.	Removal of the RP-31 Board	38
2-8.	Removal of the Power Block	39
2-9.	Removal of the Reel Block Assembly	39
2-10.	Removal of the LS Block Assembly (1)	40
2-11.	Removal of the LS Block Assembly (2)	40
2-12.	Internal Views	41
3.	**DIAGRAMS**	
3-1.	Circuit Boards Location	42
3-2.	Overall Block Diagram	43
3-3.	Video Block Diagram	46
3-4.	Servo Block Diagram	49
3-5.	System Control Block Diagram	52
3-6.	System Control Interface	55
3-7.	Audio Block Diagram	61
3-8.	Audio Level Diagram	67
3-9.	Timer Block Diagram	69
3-10.	Tuner Block Diagram	71
3-11.	Power Block Diagram	75
4.	**SCHEMATIC DIAGRAM AND PRINTED WIRING BOARDS**	
4-1.	Frame Schematic Diagram	77
4-2.	ES Model; YC-40, RP-31, TA-36, DH-4 Boards	82
4-3.	E Model; YC-40, RP-31, TA-37, DH-4 Boards	92
4-4.	SS-50, DR-33, RD-17, LM-17, R STATOR, CAPSTAN MOTOR Boards	102
4-5.	SS-50, QV-1, OC-1 US-1, LS-11 Boards	110
4-6.	AF-14, PJ-3, FL-8, DH-4, PW-15, DR-33, MC-10, HP-18 Boards	118
4-7.	FL-8, FL-9, FR-20 Boards	127
4-8.	TA-36 Board	134
4-9.	TA-37 Board	140
4-10.	M, CN, C, D, F Boards	145
4-11.	Semiconductors	149
5.	**EXPLODED VIEWS**	
5-1.	Cabinet Assembly	151
5-2.	Front Panel Assembly	152
5-3.	Main Board Assembly	153
5-4.	Frame Assembly	154
5-5.	Power Assembly	155
5-6.	LS Assembly	156
5-7.	Chassis Assembly 1	157
5-8.	Reel Table Assembly	158
5-9.	Chassis Assembly 2	159
5-10.	S Loading Assembly	160
5-11.	Drum Assembly	161
5-12.	Hardware List	162
6.	**ELECTRICAL PARTS LIST**	163
	REMOTE COMMANDER (RMT-223)	203
1.	Remote Control Operation	204
2.	Schematic Diagram	206
3.	Printed Wiring Board	207
4.	Exploded View	208
5.	Electrical Parts List	209

SECTION 1
GENERAL

WARNING

To prevent fire or shock hazard, do not expose the unit to rain or moisture.

To avoid electrical shock, do not open the cabinet. Refer servicing to qualified personnel only.

NOTE ON THE SL-HF950ES AND SL-HF950E

This instruction manual covers the SL-HF950ES and SL-HF950E.
The principal differences between the models are indicated in the following table. The differences are clearly mentioned in the text required.

	SL-HF950ES	SL-HF950E
Colour system	PAL and SECAM DDR	PAL
TV channel coverage	VHF E2 - U20 UHF E21 - E68	VHF E2 - E12 UHF E21 - E68
Stereo/bilingual TV programme reception	Provided	Not provided

The illustrations used in this manual are of the SL-HF950ES.

1-1. PRECAUTIONS

On safety
- This unit operates on 110 - 240 V ac, 50/60 Hz.
- Should any solid object or liquid fall into the cabinet, turn off the unit and have it checked by qualified personnel before operating it any further.
- To disconnect the mains lead (ac power cord), pull it out by the plug. Never pull the lead itself.
- The unit is not disconnected from the mains (ac power source) as long as it is connected to the mains outlet, even if the unit itself has been turned off.

On installation
- Allow adequate air circulation to prevent internal heat build-up. Do not place the unit on surfaces (rugs, blankets, etc.) or near materials (curtains, draperies) that may block the ventilation grille.
- Do not install the unit near heat sources such as radiators or air ducts or in a place subject to direct sunlight, excessive dust, mechanical vibration or shock.
- The unit is designed for operation in a horizontal position. Do not install it in an inclined position.
- Keep the unit and cassette tapes away from equipment with strong magnets, such as a microwave oven, large loudspeakers, etc.

On operation
- When the unit is not to be used for a long period, turn the unit off to conserve energy and to extend the useful life of your unit.
- Remove and store video cassettes after recording or playback. Always store the cassette in its case to keep the tape away from dust.

On cleaning
Clean the cabinet, panel and controls with a dry soft cloth. Do not use a moistened cloth or any type of solvent, such as alcohol or benzine, which might damage the finish.

On repacking
Do not throw away the carton and packing materials. They make an ideal container in which to transport the unit. When shipping the unit to another location, repack it as illustrated on the carton.

On colour broadcasting systems
This machine is designed to record and play back using the PAL colour system (SL-HF950E) or the PAL and DDR SECAM colour systems (SL-HF950ES). Recording and playback of video sources based on other colour systems cannot be guaranteed.

If you have any questions about this unit, contact your Sony dealer.

REMOVAL OF THE TRANSIT SCREWS

The cassette compartment is secured with three transit screws to prevent it from sliding out while the unit is being transported.
Before operating the unit, be sure to remove the transit screws, using a screwdriver. Store the screws in the screw holes at the rear, and put them back in the original positions when transporting the unit.

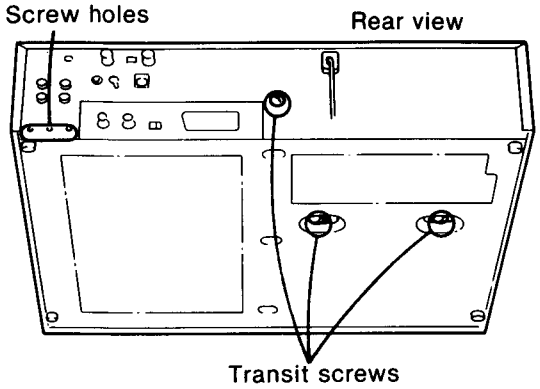

1-2. TECHNICAL INFORMATION

HIGH QUALITY SOUND

What is Beta hi-fi PAL recording?
In conventional recording, audio signals are recorded on the audio track and the video signals on the video track. On Beta hi-fi recording, audio signals are recorded on the video track together with the video signals.
In this recorder's Beta hi-fi PAL system, audio signals are recorded first, using the 2 audio heads, then video signals are recorded over the audio signals with an azimuth offset, using the 2 video heads.
Beta hi-fi audio signals are frequency-modulated and recorded on 2 channels, so you can record a stereo or bilingual programme with sound clearly superior to that of a conventional audio recording.

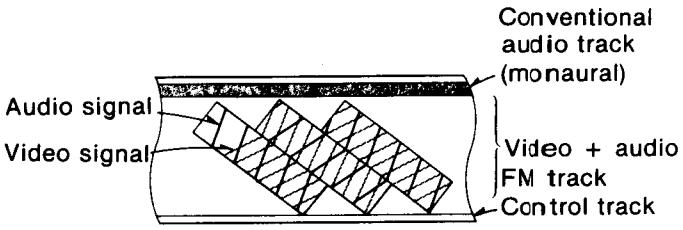

Video heads
For recording/playback of video signals

Audio heads
For recording/playback of Beta hi-fi audio signals

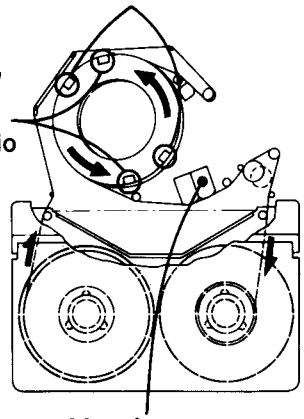

Audio/control heads
For recording/playback of conventional audio signals and control signals

Beta hi-fi recording on this recorder
This recorder simultaneously records audio signals on the video track (Beta hi-fi recording) and on the conventional audio track (in monaural), so that tapes recorded with this recorder can be played back on an ordinary video cassette recorder without a Beta hi-fi system.

HIGH QUALITY PICTURE

—Technology behind Super Beta (PAL)

Super Beta standard mode

Betamax provides a high-resolution picture thanks to its high relative tape-to-head speed produced with the large diameter head drum.

Super Beta standard mode offers even sharper and detailed picture reproduction by improving the emphasis characteristics of video signals in recording and the noise canceller characteristics in playback.

Super Beta PRO mode

In addition to the technology mentioned above, with the use of the highest-grade tape, the FM carrier frequency of the luminance signal is shifted up by 500 kHz. The results are higher resolution of the picture and improved signal-to-noise ratio of the chrominance signal. (Fig. 1)

Other technical extras

This SL-HF950ES/E employs a compression circuit for recording current of the chrominance signal for better signal-to-noise ratio. (Fig. 2) In addition, the newly developed "DA (Double Azimuth) PRO 4 HEAD" reduces interference between adjacent video tracks resulting in higher quality picture reproduction. These technologies contributes to overall picture quality of the SL-HF950ES/E.

Notes

- Super Beta PRO mode must be used with highest-grade tapes such as Sony PRO-X or equivalent tapes from other tape manufacturers.
- The tapes recorded in Super Beta should be played back in Super Beta mode.

Fig. 1 Frequency response

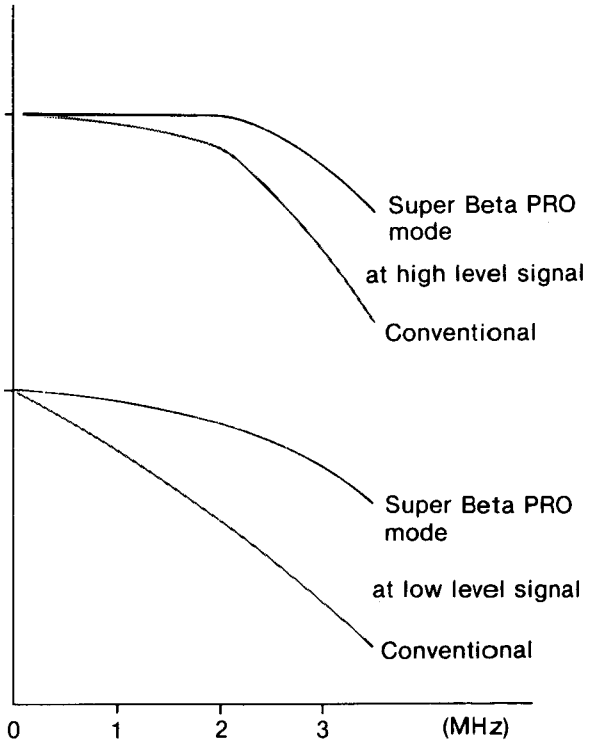

Fig. 2 Chrominance signal-to-noise ratio

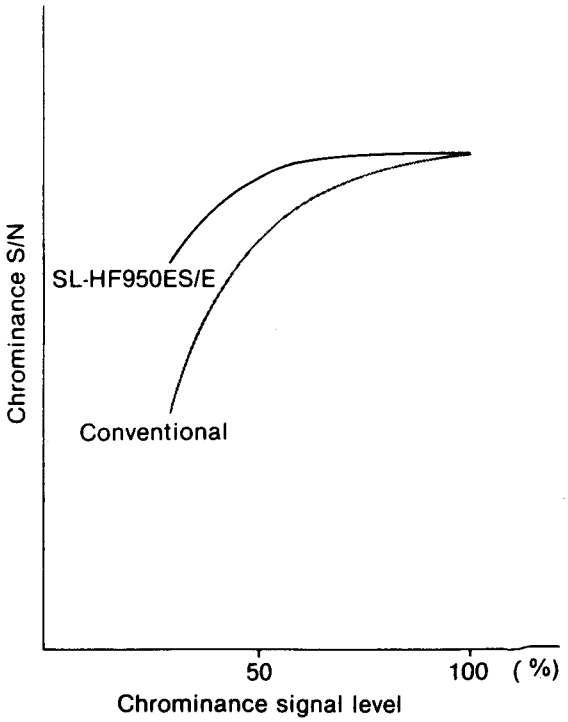

1-3. LOCATION AND FUNCTION OF CONTROLS

Front

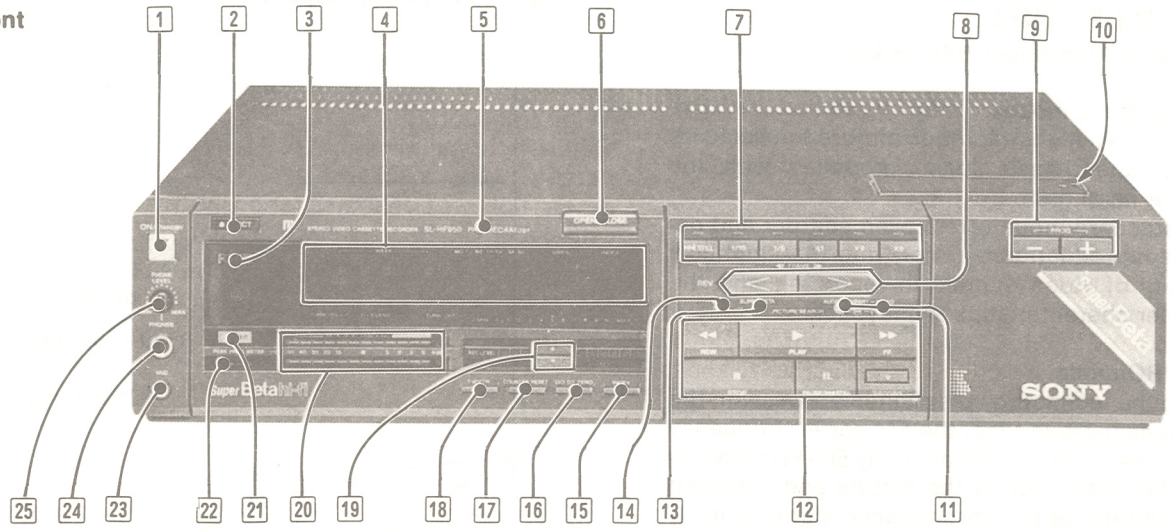

1 ON/STANDBY switch and indicator
Press to turn on the unit. The indicator will light up. Press again to turn it off.
The timer section will continue to operate and the time will be displayed even if the ON/STANDBY switch is off.

2 ⏏ EJECT button
Press to remove the cassette. This button does not function when the recorder is turned off.

3 REMOTE SENSOR
Detects the remote control signal transmitted from the supplied Remote Commander.

4 Display window

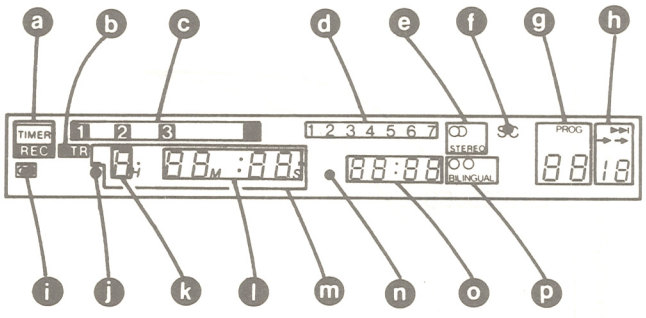

- ⓐ **TIMER REC indicator:** Shows the recorder is in timer standby mode. It is also displayed during timer recording including quick timer recording.
- ⓑ **VTR indicator:** Shows the recorder is in VTR mode.
- ⓒ **Week indicators:** Show the week in which the timer recording will take place. See page 25.
- ⓓ **Day of the week indicators**
- ⓔ **STEREO indicator (SL-HF950ES only):** Shows a stereo broadcast is being received.
- ⓕ **SC (simulcast) indicator:** Shows the INPUT SELECT switch is set to SIMUL.
- ⓖ **PROG (programme) number:** Shows the programme number selected with the PROG +/– buttons. When the INPUT SELECT switch is set to LINE/PCM, the indication will change to "AU".
- ⓗ **Index indicators:** Appear when the index function is activated. See page 22.
- ⓘ **Cassette indicator:** Shows a cassette is inserted.
- ⓙ **Turn-on time setting indicator**
- ⓚ **Event number**
- ⓛ **Turn-on time** of a timer recording
- ⓜ **Time counter:** Shows the approximate tape running time.
- ⓝ **Turn-off time setting indicator**
- ⓞ **Clock/turn-off time:** Normally shows the current time. Shows the turn-off time of a timer recording during timer setting and checking.
- ⓟ **BILINGUAL indicator (SL-HF950ES only):** Shows a bilingual broadcast is being received.

5 Cassette compartment
The compartment slides out when the ⏏ EJECT button or the ▼ OPEN/CLOSE button is pressed. To slide it in, press the ▼ OPEN/CLOSE button.

6 ▼OPEN/CLOSE button
Press to slide out the cassette compartment regardless of whether the tape is running or not. Press again to slide in the cassette compartment.

[7] **Variable speed playback buttons and indicators**
During playback (in normal, still, fast motion or slow motion picture mode), press one of these buttons to select the desired playback speed. The indicator on the button lights. When the indicator of the > FWD FRAME button lights, the picture advances. When the indicator of the REV < FRAME button lights, the picture moves in the reverse direction.
▶|◀ STILL button: For still picture
1/10 button: For slow motion picture at 1/10 normal speed
1/5 button: For slow motion picture at 1/5 normal speed
× 1 button: For normal speed picture
× 2 button: For double-speed picture
× 9 button: For fast motion picture at 9 times normal speed

[8] **FRAME buttons**
During normal or variable speed playback, these buttons are used to select the direction of playback. Press the > FWD button for forward picture, or the REV < button for reverse picture.
These buttons are also used for frame-by-frame playback. During pause of playback or in still picture mode, press the > FWD button to advance the picture by one frame, or the REV < button to reverse the picture by one frame. If either button is kept depressed, the picture moves frame by frame continuously.

[9] **PROG (programme) +/– buttons**
Press + to advance or – to reverse the programme numbers. Also used for clock setting and timer setting.

[10] **Tuning compartment**
All the switches and buttons for programming stations are in this compartment.

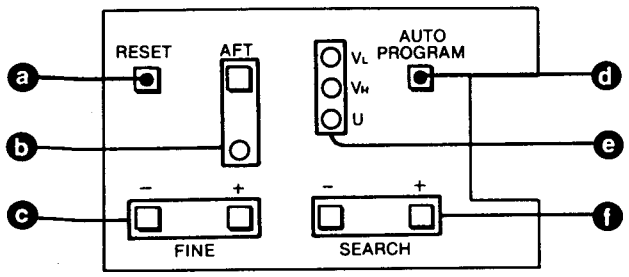

ⓐ **RESET button:** To clear the programmed station, press this button.
ⓑ **AFT button and lamp:** The AFT circuit activates automatically after the stations are tuned and memorized with automatic and manual programming. The AFT lamp will illuminate. If you wish to restore the AFT on the station which has been fine-tuned manually with the FINE buttons, press the AFT button.
ⓒ **FINE + and – buttons:** Press to fine-tune the station.
ⓓ **AUTO PROGRAM (automatic programming) button:** To preset the receivable stations automatically, press this button.
ⓔ **Tuning lamps:** Lights to indicate the tuning band.
ⓕ **SEARCH + and – buttons:** Press to tune in a station. Press the – button to get a station of lower frequency and the + button to get a station of higher frequency.

[11] **INSERT indicators**
The AUDIO indicator lights when the AUDIO INSERT button is pressed, and the VIDEO indicator lights when the VIDEO INSERT button is pressed.

[12] **Function buttons**
◀◀ REW button: Press to rewind the tape.
▶ PLAY button: Press to play the tape back.
▶▶ FF button: Press to advance the tape rapidly.
■ STOP button: Press to stop the tape.
❚❚ PAUSE/▶|◀ STILL button: Press to stop the tape for a moment during recording or playback. Press again to release the pause mode.
● RECORD button: Press to start recording.

[13] **SUPER BETA indicator**
This indicator lights when the SUPER BETA selector is set to the SUPER BETA (STD or PRO) position.

[14] **EDIT indicator**
This indicator lights when the EDIT switch is set to the lower position.

[15] **INDEX button**
This button is used for the index search or index scan operation. See page 23.

[16] **GO TO ZERO button**
In stop mode, press this button to advance or rewind the tape to approximately the "0H00M00S" point on the time counter.

[17] **COUNTER RESET button**
Press to reset the time counter to "0H00M00S".

[18] **TV/VTR select button**
This button is operable when a TV is connected to the recorder's 21-pin EUROCONNECTOR.
To view a TV programme selected by the PROG buttons on the recorder or to monitor the picture being recorded, press this button so that the VTR indicator appears in the display window. When the ▶ PLAY button on the recorder is pressed, the recorder is automatically set in the VTR mode. To view a TV programme in the usual manner, press this button so that the indicator goes off. When the recorder is turned off, the recorder is automatically set in the TV mode.

Inside the front panel

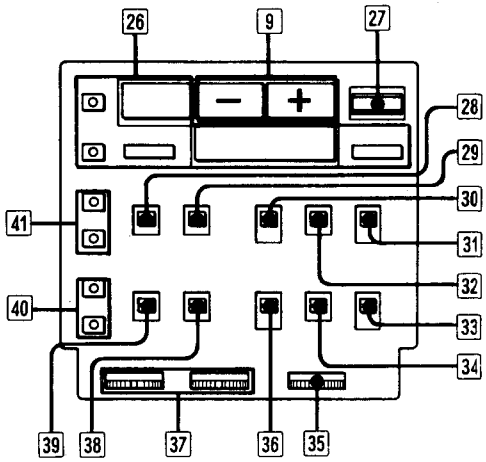

19 REC LEVEL (recording level) controls
Used to adjust the audio recording level of Beta hi-fi recording. Normally set these controls to 5 (green position) for recording TV programmes.

20 PEAK PROG (programme) METER/BETA HI-FI TRACKING meters
When the LEVEL METER selector is set to ON, these meters show the peak input levels of the left and right channels during Beta hi-fi recording, and recorded levels during playback.
When the LEVEL METER selector is set to BETA HI-FI TRACKING, the meters show the audio tracking adjustment. Adjust the audio tracking for optimum sound reproduction of a tape on which only the sound has been recorded in Beta hi-fi.

21 Beta hi-fi lamp
Lights to show Beta hi-fi recording, or playback of a Beta hi-fi recorded tape regardless of the BETA HI-FI selector's position.

22 SOUND lamp
When the RECORD mode selector is set to SOUND, this lamp lights to show audio recording. It also lights when a tape with audio signals only is being played back.

23 MIC (microphone) jack (minijack)
Connect a microphone to record the sound from it on the conventional audio track.

24 PHONES jack (stereo phone jack)
Connect headphones to monitor the sound.

25 PHONE LEVEL control
Adjust the sound volume of the headphones.

26 Buttons for clock and timer setting

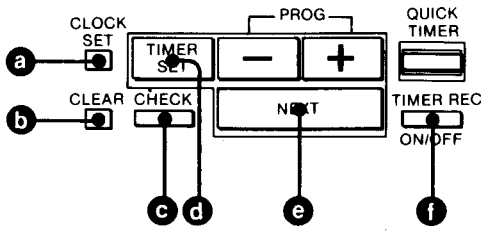

- **a CLOCK SET button:** Press to initiate clock setting.
- **b CLEAR button:** Press to erase the memory of the timer setting.
- **c CHECK button:** Press to check timer settings.
- **d TIMER SET button:** Press to initiate timer setting.
- **e NEXT button:** Press to advance to the next item to be set during clock or timer setting.
- **f TIMER REC ON/OFF button:** Press to activate timer recording. Press it again to deactivate timer recording or quick timer recording in timer standby mode or while recording.

27 QUICK TIMER button
Press to set the recording duration up to 4 hours in units of 30 minutes.

28 TONE selector
Normally set to HIGH. If the high frequencies of the playback sound recorded on the conventional audio track seem exaggerated, set to LOW.

[29] BETA HI-FI selector

Selects the video track or the conventional audio track for sound playback.

AUTO: Normally, set to this position. The recorder will automatically select the video track for Beta hi-fi recorded tapes or the conventional audio track for tapes recorded without the Beta hi-fi system.

NORMAL: Set to this position when you wish to listen to the sound recorded on the conventional audio track of a Beta hi-fi recorded tape.

[30] AUDIO MONITOR selector

When the BETA HI-FI selector is set to AUTO, select the sound to be listened to. See page 18.

When the BETA HI-FI selector is set to NORMAL, the sound being recorded or already recorded on the conventional audio track is heard, regardless of the position of this selector.

[31] LEVEL METER selector

Set to ON to turn on the PEAK PROG METER.

Set to OFF to turn the meter off. Set to BETA HI-FI TRACKING to adjust the audio tracking of a tape on which the sound only has been recorded in Beta hi-fi.

[32] DISPLAY switch

Normally set to ON. To turn off the on-screen display on the TV or monitor, set to OFF.

[33] SUPER BETA selector

Normally keep this selector at NORMAL. To record or play back in Super Beta, set to STD or PRO. See page 16.

[34] EDIT switch

Normally keep this switch at the upper position. When editing a tape onto another recorder, set to the lower position.

[35] SHARPNESS control

Used to adjust the sharpness of the playback picture if necessary. Normally set the control at the center detent position.

[36] INPUT SELECT switch

Select the programme to be recorded.

TUNER: For recording TV programmes

SIMUL: For recording FM simulcast programmes

LINE/PCM: For recording signals connected to the VIDEO IN and AUDIO IN jacks

[37] TRACKING controls

Normally keep these controls at the center detent position. Turning either of the controls may help clear possible streaks or noise bands on the screen. See "Picture adjustment for variable speed playback" on page 20.

The NORMAL control is also used for Beta hi-fi tracking adjustment.

[38] MPX FILTER (multiplex filter) switch

Normally set to ON for Beta hi-fi recording. The multiplex filter cuts off the high-frequency signals which sometimes grate on the ear. If you wish to record without cutting the high frequencies, set to OFF.

[39] RECORD mode selector

VIDEO: Normally, set to this position. Sound and picture are recorded in Beta hi-fi.

SOUND: Set to this position to record sound only in Beta hi-fi.

[40] INSERT buttons

Use these buttons to " insert " a new recording onto a part of a recorded tape. Press the AUDIO button to insert sound on the conventional audio track. Press the VIDEO button to insert picture and/or Beta hi-fi sound on the video track.

[41] INDEX buttons

Press the MARK button to mark an index signal at the desired point during recording or playback. To erase a prerecorded index signal, locate the index signal and press the ERASE button.

Rear

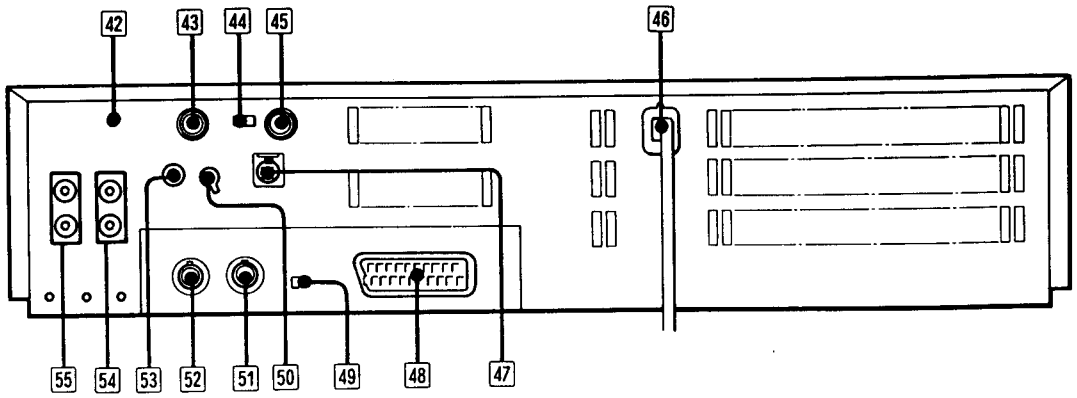

42 RF CHANNEL screw
If there is interference on the factory-preset channel for RF output and the signal of this recorder cannot be displayed clearly on the TV screen, adjust this screw with the supplied screwdriver.

43 AERIAL OUT socket
Connect the aerial input of the TV receiver using the supplied cable.

44 DX/LOCAL switch
Normally set this switch to DX. If the TV signal is very strong, set the switch to LOCAL.

45 AERIAL IN socket
Connect the aerial cable.

46 AC mains lead

47 CONTROL L connector (5 pin)
Connect to the CONTROL L connector of other Sony products for various system operations.

48 EUROCONNECTOR (21 pin)
Connect to the 21-pin EUROCONNECTOR of another recorder, TV or video monitor.

49 TEST SIGNAL switch
Set to ON to obtain the test pattern for adjusting the TV so that it can receive the signal from the recorder.

50 STILL ADJ (still picture adjustment) knob
If the still or slow motion picture appears to shake, turn this knob until it stabilizes.

51 VIDEO IN jack (BNC type)
Connect to the video output of a camera, another video cassette recorder, a PCM digital audio processor, etc.

52 VIDEO OUT jack (BNC type)
Connect to the video input of another video cassette recorder, a video monitor or a PCM digital audio processor.

53 CONTROL S input jack (minijack)
Connect to the CONTROL S output jack of other Sony products for various system operations.

54 AUDIO IN jacks (phono type)
Connect to the audio outputs of a camera or another video cassette recorder, or to the recording outputs of a stereo amplifier.

55 AUDIO OUT jacks (phono type)
Connect to the audio inputs of a video monitor or another video cassette recorder, or to the auxiliary inputs or tape inputs of a stereo amplifier.

1-4. ON-SCREEN DISPLAY

The various operation modes of this recorder are displayed on the screen of the connected TV or monitor.

Note
The on-screen display does not appear when there is no picture on the screen.

WHEN A TV PROGRAMME IS SELECTED

The programme number is displayed when the INPUT SELECT switch is set to TUNER or SIMUL and the +/– PROG button is pressed.
The programme number will be turned off in several seconds.

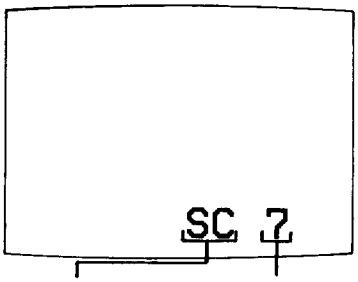

Simulcast indicator* Programme number or AU

*The SC indicator appears when the INPUT SELECT switch is set to SIMUL.

WHEN THE TAPE IS IN OPERATION

The time counter and the tape operation mode are displayed.

Most of the tape operation mode indicators will be automatically turned off in several seconds.
The time counter normally remains displayed. To turn off the counter, press the COUNTER DISPLAY button on the Remote Commander. To recall the counter display, press the same button again.

Note
Once the on-screen time counter is turned off with the COUNTER DISPLAY button, it will not appear even when the recorder is turned off and on again.

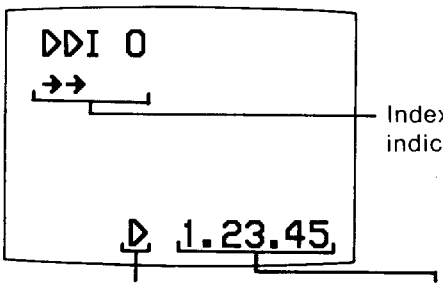

Tape operation mode indicators

◁◁	Rewind	D I◁	Still picture
D	Playback	II D	Forward frame-by-frame picture
DD	Fast-forward	◁II	Reverse frame-by-frame picture
(◁◁)	Reverse picture search	V●	Video insert
(DD)	Forward picture search	V●II	Video insert pause
DII	Playback pause	A●	Audio insert
O	Recording	A●II	Audio insert pause
OII	Recording pause	A/V●	Audio/video insert
X9 –X9	Variable speed playback "–" indicates the reverse direction.	A/V●II	Audio/video insert pause
X2 –X2		–DD I–	Manual index signal mark or erase
X1 –X1		_ DDI _	Index scan
1/ 5 –1/ 5			
1/10 –1/10		DD I	Index search

DISPLAY FOR TIMER

When the TIMER SET button is pressed, the preset events and the event in setting are displayed. The blinking item is what you are setting.

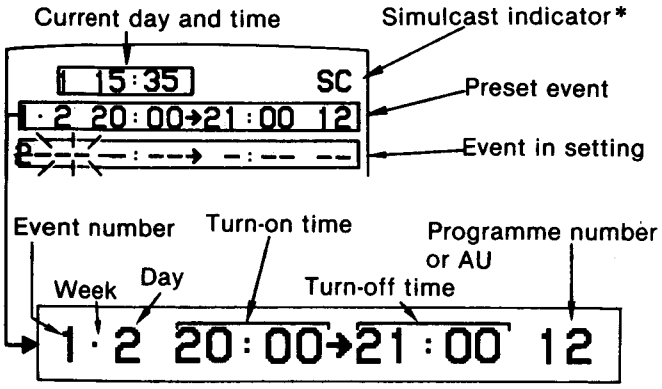

Week indicators		Day indicators	
1→7	Every day	1	Monday
·	This week	2	Tuesday
:	Next week	3	Wednesday
⋮	The week after next	4	Thursday
■	Every week	5	Friday
		6	Saturday
		7	Sunday

When the CHECK button or the TIMER DISPLAY button on the Remote Commander is pressed, the list of all preset events appears.
Every time the CHECK button is pressed, the event number blinks in sequence to show that the setting of that particular event can be changed or cleared.

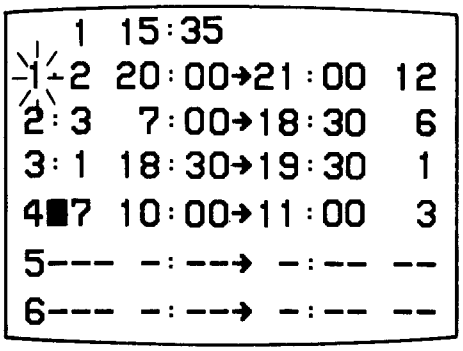

When the CLEAR button is pressed, the event will be erased from the memory.

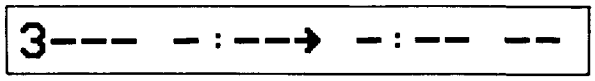

The timer display will be turned off when the TIMER DISPLAY button is pressed again or when the CHECK button is pressed with the last event number blinking.

WHEN THE QUICK TIMER IS ACTIVATED

The recording duration and the programme number are displayed. The display will be automatically turned off in several seconds.

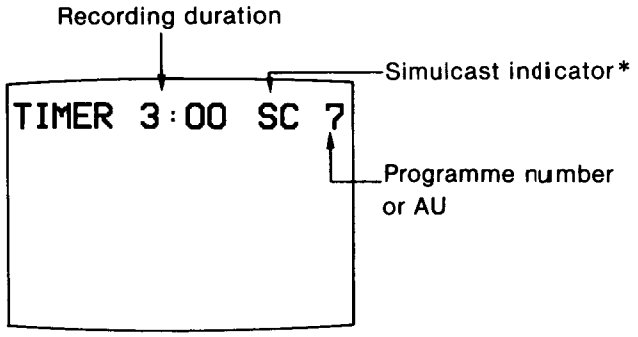

*The SC indicator appears when the INPUT SELECT switch is set to SIMUL.

BASIC OPERATIONS

1-5. CASSETTE INSERTION

1 Press the ON/STANDBY switch. The indicator on the switch and the Beta hi-fi lamp will light.
2 Press the ⏏ EJECT button. The cassette compartment slides out and the cassette holder is raised.
3 Insert a cassette with the arrow on the cassette towards the front.

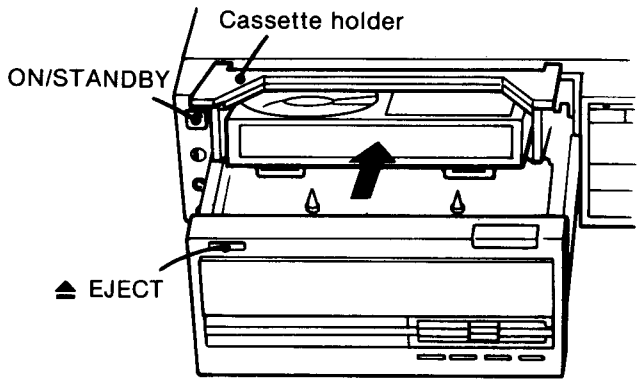

4 Press the ▼ OPEN/CLOSE button. The cassette compartment slides in and the ⊡ indication appears in the display window.

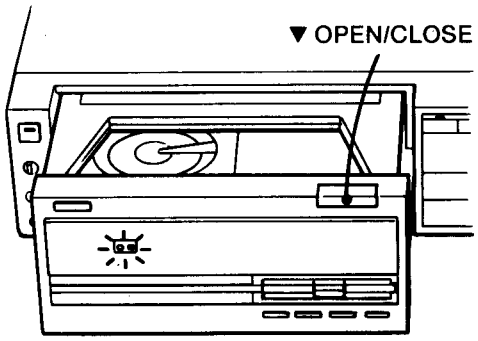

In place of Step 4, you may press any of the function buttons. The cassette compartment slides in and the recorder directly goes into the selected tape operation mode.

To eject the cassette
Press the ⏏ EJECT button. The cassette compartment slides out and the cassette holder is raised. Take out the cassette by hand.

Note
The ⏏ EJECT button does not function when the recorder is turned off or during recording or audio/video inserting.

To open/close the cassette compartment
By pressing the ▼ OPEN/CLOSE button, the cassette compartment can be slid out or in even while the tape is running, allowing check of the remaining tape amount.

Notes on the cassette compartment
- Be careful not to trap your hand between the cassette compartment and the cabinet when the compartment is moving. If you should do so, the cassette compartment will automatically stop and move in the opposite direction in several seconds.
- Do not insert anything other than a cassette inside the cassette holder and compartment.
- Do not push down on the cassette holder forcibly when it is raised. If excessive force is applied, the protective device is activated to stop the cassette compartment movement and recorder operation. In this case, press the ▼ OPEN/CLOSE button.
- Frequent moving of the cassette compartment during recording is not recommended, since this may affect the recording.

1-6. TV PROGRAMME RECORDING (Beta hi-fi recording)

Check before recording
The green position is the standard setting position for Beta hi-fi recording.

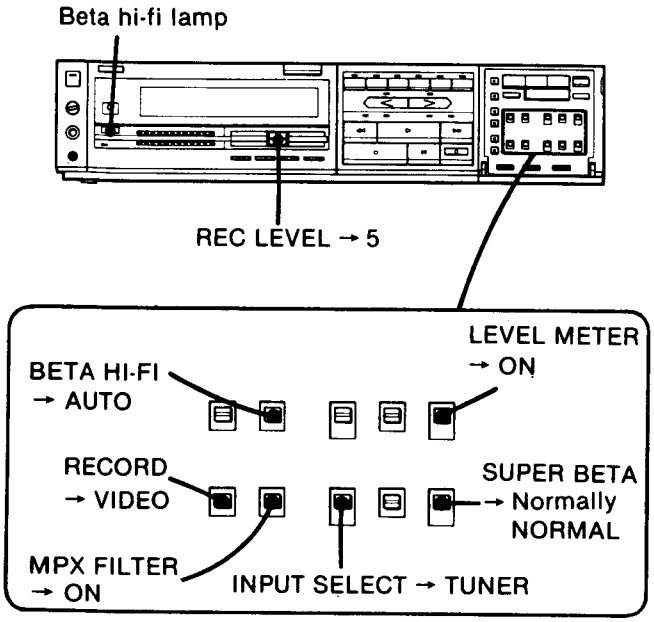

Recording will be made both on the video track (Beta hi-fi recording) and on the conventional audio track.

TO RECORD

Numbers in the illustration show the sequence of operation.

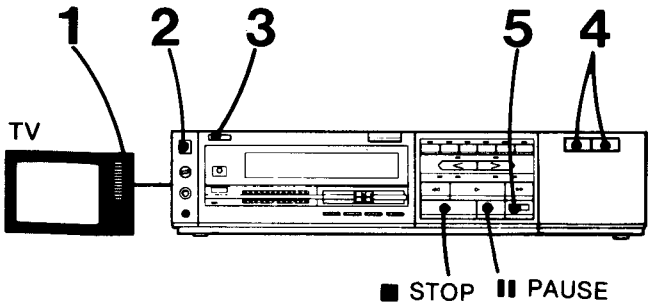

1 Turn on the TV and select the programme position for the recorder.
2 Press the ON/STANDBY switch. The indicator on the switch and the Beta hi-fi lamp will light up.
3 Insert the cassette. See page 15.
4 Select the programme to be recorded with the +/– PROG buttons.
5 Press the ● RECORD button. The indicator on the button will light and recording will begin.
- If the inserted cassette does not have the safety tab, the cassette will be automatically ejected.

To stop recording momentarily, press the II PAUSE button. The indicator on the button will light. The TV programme can be seen on the TV, but the picture will not be recorded.
To resume recording, press the II PAUSE button again.
To protect the video heads and the tape, the pause mode will be automatically released after about 8 minutes and recording will stop.

To stop recording, press the ■ STOP button.

To eject the cassette, press the ⏏ EJECT button after stopping the recording.

To view another TV programme while recording, simply select the programme you want to view with the TV's programme selector.

When the tape reaches the end during recording, it will be automatically rewound.

CAUTION
Television programmes, films, video tapes and other materials may be copyrighted.
Unauthorized recording of such material may be contrary to the provision of the copyright laws.

SUPER BETA selector
NORMAL position: Normally keep the selector in this position. When playing back tapes recorded on other non-Super Beta recorders or tapes recorded on this recorder by setting this selector to the NORMAL position, set the selector in this position.
SUPER BETA STD (standard) position: In this position, high quality recording and playback picture are obtained.
SUPER BETA PRO position: If you use the highest-grade tape such as Sony PRO-X or equivalent tapes from other tape manufacturers, further enhanced picture quality is attained. With lower-grade tapes, however, the picture quality will suffer somewhat.
When the SUPER BETA selector is set to the SUPER BETA STD or PRO position, the SUPER BETA indicator lights.

Note
The picture quality will suffer somewhat, if a tape recorded in the SUPER BETA PRO or STD position is played back on other non-Super Beta recorders, or on this recorder with this selector set to NORMAL.

TO KEEP A RECORDED PROGRAMME FROM BEING ACCIDENTALLY ERASED

When a new recording is made on a previously recorded cassette, the previous recording will be automatically erased.

To avoid erasing a recording
Break off the safety tab using a screwdriver or similar object.

To re-record on a cassette which has had the safety tab removed
Cover the slot with a piece of plastic tape.

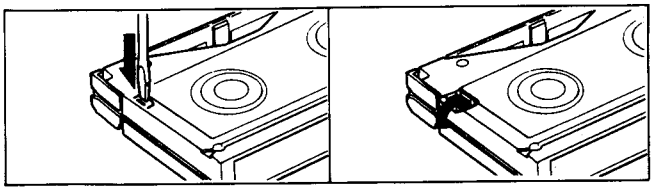

If you activate the ● RECORD, TIMER REC ON/OFF, VIDEO INSERT or AUDIO INSERT button with a cassette with its safety tab removed inserted, the cassette will be automatically ejected.

RECORDING A STEREO OR BILINGUAL TV PROGRAMME (SL-HF950ES only)

When the ∞ STEREO indication appears in the display window, a stereo programme is being received. The recording procedure is the same as in " TV programme recording ". The sound is recorded both on the video track (stereo) and on the conventional audio track (monaural).

Conventional audio track	Monaural recording
Video track	Stereo recording

When the OOBILINGUAL indication appears in the display window, a bilingual programme is being received. The recording procedure is the same as in "TV programme recording".
Both the local language (usually broadcast on channel 1) and the original language (usually broadcast on channel 2) are recorded on the video track, and only the language on channel 1 is recorded on the conventional audio track.

Conventional audio track	Language on channel 1
Video track	Languages on channels 1 and 2

The sound of a stereo or bilingual programme can be monitored by selecting the desired sound with the AUDIO MONITOR selector. See page 18.

1-7. PLAYBACK

Check before playback

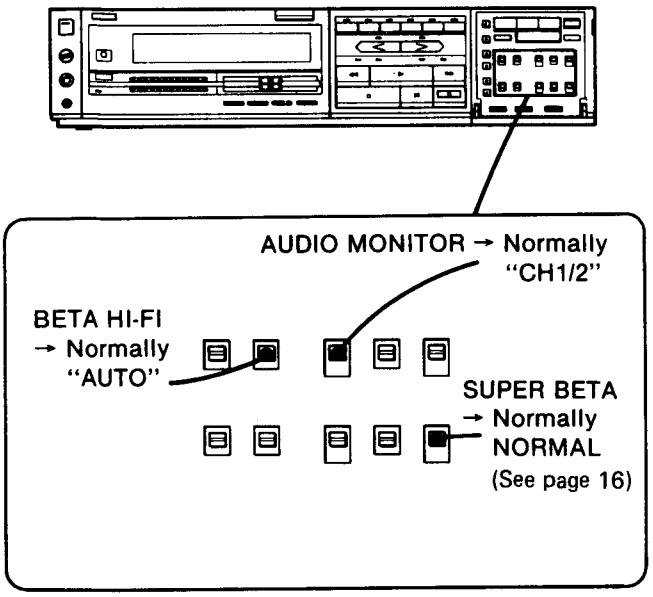

Numbers in the illustration show the sequence of operation.

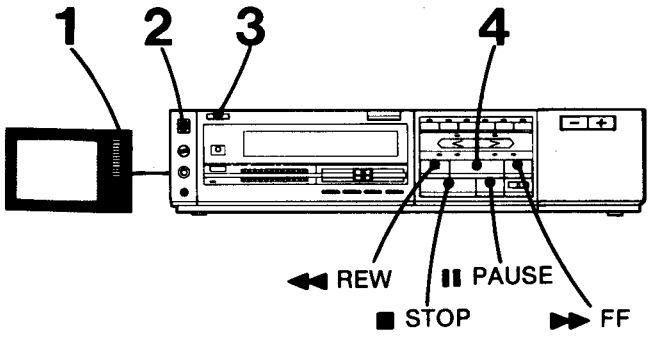

1 Turn on the TV and select the programme position for the recorder.
2 Press the ON/STANDBY switch. The indicator on the switch and the Beta hi-fi lamp will light up.
3 Insert the cassette. See page 15.
4 Press the ▶ PLAY button. The indicator on the button will light and playback will begin.

To stop playback, press the ■ STOP button.

To rewind the tape, press the ◀◀ REW button.

To advance the tape rapidly, press the ▶▶ FF button.

To eject the cassette, press the ⏏ EJECT button.

When the tape reaches the end during playback, it will be automatically rewound.

To stop playback momentarily, press the ❚❚ PAUSE button. A still picture will be seen on the TV screen. To resume playback, press the ❚❚ PAUSE button again or press the ▶ PLAY button.
The pause mode will be automatically released after about 8 minutes and the playback will resume.

SELECTION OF PLAYBACK/RECORDING MONITOR SOUND

For Beta hi-fi recorded tapes
Normally set the BETA HI-FI selector to AUTO. The sound on the video track will be heard. To listen to the sound on the conventional audio track, set the selector to NORMAL.
Return the selector to AUTO after playing back the tape.

During normal playback, the Beta hi-fi lamp lights to show that the tape is Beta hi-fi recorded. Therefore, the lamp also lights when the sound on the conventional audio track of a Beta hi-fi recorded tape is being played back.

For Beta hi-fi recorded stereo or bilingual tapes
Set the BETA HI-FI selector to AUTO and select the sound to be listened to through the speakers or headphones with the AUDIO MONITOR selector. Set to CH1/2 to listen to the stereo sound or both languages. If you want to listen only to the left or right channel of stereo programmes or either language of bilingual programmes, set to CH1 or CH2, referring to the following table.

AUDIO MONITOR selector	Sound to be listened to through :	
	Left speaker	Right speaker
CH1/2	Left channel (Language on channel 1)	Right channel (Language on channel 2)
CH1	Left channel (Language on channel 1)	
CH2	Right channel (Language on channel 2)	

( ) for bilingual programmes

Note
If this recorder is connected to a monaural TV or it is connected to the aerial input of a TV, the sound will be always heard in monaural.

For non-Beta hi-fi recorded tapes
A tape recorded on another recorder without Beta hi-fi system is played back in the conventional way, regardless of the position of the BETA HI-FI and AUDIO MONITOR selectors.

PICTURE AND SOUND ADJUSTMENT

- To adjust the sharpness of the playback picture, turn the SHARPNESS control.
- If streaks or snow appear during playback of a tape recorded on another recorder, adjust the NORMAL TRACKING control for the best possible picture. Return the control to the centre position after playing back that particular tape.
- If the sound of a tape recorded on another Beta hi-fi recorder is noisy or cannot be heard, adjust the NORMAL TRACKING control.
- If the high frequencies of the playback sound recorded on the conventional audio track seem exaggerated, set the TONE selector to LOW. Return it to HIGH after playing back that particular tape.
- When playing back a tape with only the sound recorded in Beta hi-fi (that is, a tape recorded with the RECORD mode selector set to SOUND), set the LEVEL METER selector to BETA HI-FI TRACKING and adjust the NORMAL TRACKING control so that the meters deflect to the right as far as possible.

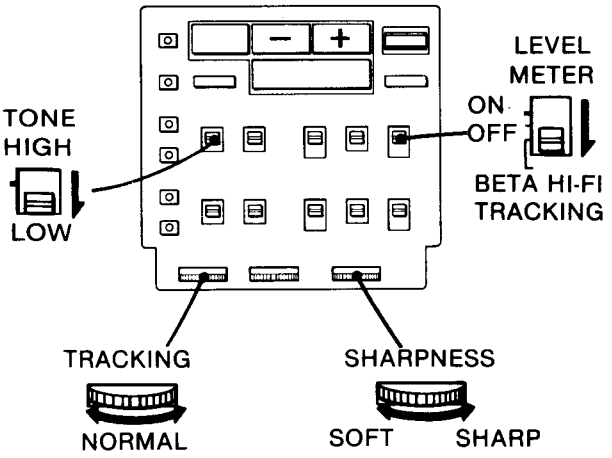

Note
The BETA HI-FI TRACKING meters function properly only when a tape recorded with the RECORD mode selector set to SOUND is being played back. For tapes recorded with the selector in the VIDEO position, the meters do not deflect at all or deflect minimally.

VARIOUS PLAYBACK MODES

PICTURE SEARCH

—Viewing the picture at high speed to find a particular scene

During playback, keep the ◀◀ REW or ▶▶ FF button pressed to reverse or advance the picture at high speed. Release the button at the desired point. Normal playback will resume. The picture search mode can also be assured directly from the pause mode.

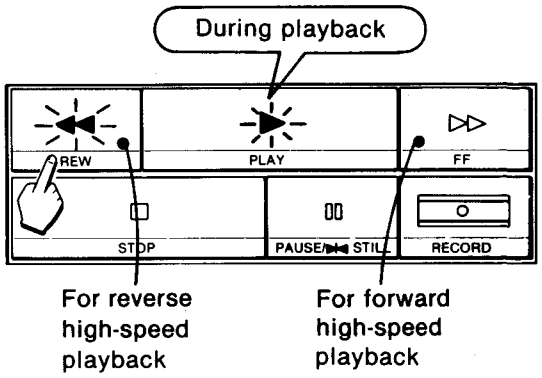

SKIP SCAN

—Viewing the picture momentarily in the fast-forward or rewind mode

During rewind or fast-forward mode, keep the ◀◀ REW button pressed for high-speed picture reverse, or keep the ▶▶ FF button pressed for high-speed picture advance. The picture appears momentarily while either of the buttons is pressed. Release the button at the desired point. Normal rewind or fast forward mode will resume.

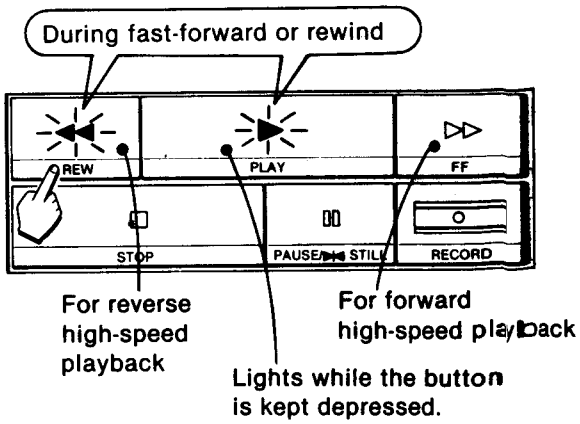

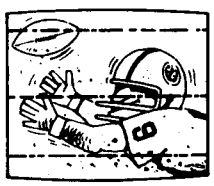

Streaks will appear during the picture search and the skip scan modes.

AUTO PLAY

—To rewind the tape and automatically play it back

Press the ▶ PLAY button and ◀◀ REW button simultaneously in stop mode. After the tape is rewound to the beginning, it will be automatically played back.

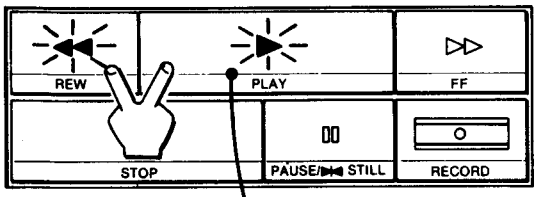

Blinks while rewinding

VARIABLE SPEED PLAYBACK

During playback or pause of playback, press one of the variable speed playback buttons. The indicator on the button lights.
The sound will be muted during variable speed playback.

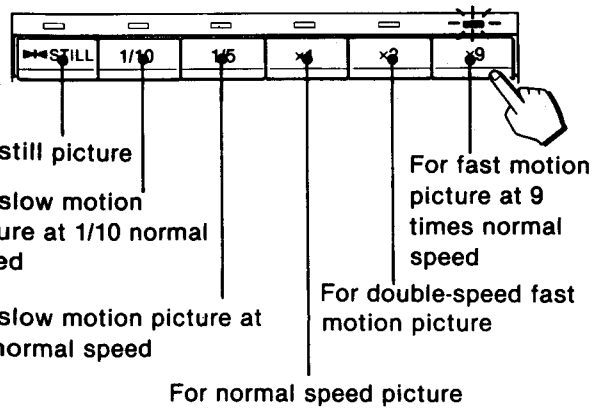

To resume normal playback, press the ▶ PLAY button.

To change the playback speed, simply press the desired variable speed playback button.

To reverse the direction of the variable speed playback, press the REV < button. The indicator on the button lights. To resume forward playback, press the > FWD button.

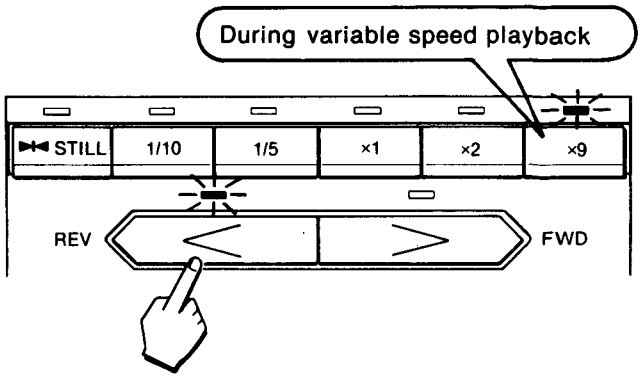

Frame-by-frame playback
Play back the tape and press the ❚❚ PAUSE/▶◀ STILL button or the ▶◀ STILL button. Then press the > FWD or REV < button momentarily. Each time the button is pressed, the picture advances or reverses by one frame. If the > FWD or REV < button is kept depressed, the picture advances or reverses frame by frame continuously.

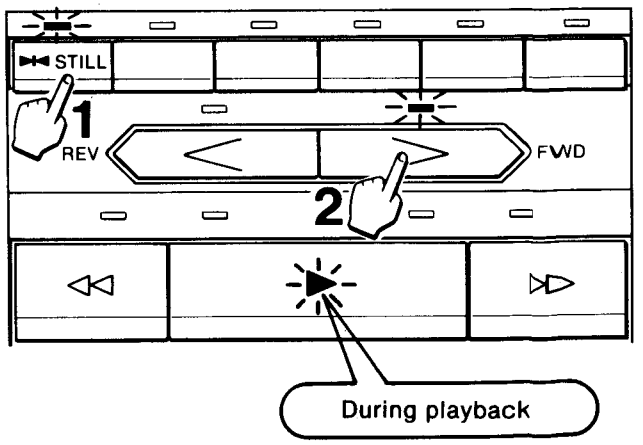

Picture adjustment for variable speed playback

- If the still picture appears to shake, turn the STILL ADJ knob on the rear panel until the picture stabilizes. As long as the same TV is used with this recorder, this adjustment should not be needed so frequently.
- If streaks or noise bands appear in still picture or slow motion (1/5 or 1/10) forward picture or in frame-by-frame playback, adjust the SLOW TRACKING control.
- If streaks or noise bands appear in normal (×1) or double speed (×2) forward picture, adjust the NORMAL TRACKING control.

Note
The Beta hi-fi lamp and the SOUND lamp do not light during variable speed playback.

1-8. USE OF THE TIME COUNTER

The time counter indicates the approximate running time of the tape and the relative position of programmes on the tape.

TO INDEX THE TAPE CONTENTS

Before starting recording or playback, press the COUNTER RESET button to set the counter to "0H00M00S". By noting the counter reading at the desired point, you can easily find that point later by referring to the counter. Use the label on the cassette to list the programmes and their counter readings.

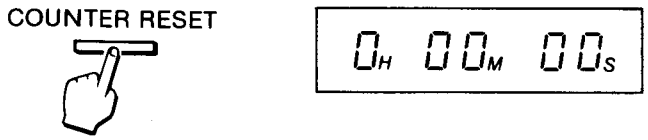

Notes

- The counter reading is automatically reset to zero when a cassette is newly inserted.
- The counter reading will be retained in the memory even after the power is turned off, as long as the cassette is in the cassette compartment.
- The counter will not advance during any portion of a tape that is blank or unrecorded. So the counter can be used to find unrecorded sections on a tape.

"GO TO ZERO" FUNCTION

—To stop the tape at a particular point or play back from a particular point

1 During recording or playback, press the COUNTER RESET button at the point you later want to locate.
2 When recording or playback is finished, stop the tape and press the GO TO ZERO button.
The tape will be rewound or advance close to the point where the counter reads "0H00M00S".
During rewinding or fast-forward mode, the indicator on the ◀◀ REW or ▶▶ FF button lights, depending on the tape movement direction.

To start playback automatically from the "0H00M00S" point

Press the ▶ PLAY button after pressing the GO TO ZERO button.

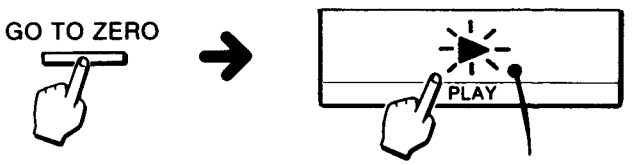

Blinks during rewind or fast-forward mode.

Note

The "go to zero" function cannot be activated when the counter reading is within ± 0H00M10S.

1-9. INDEX FUNCTION

The desired programme can be easily located by the index signal marked on the tape.

TO MARK INDEX SIGNALS

An index signal is automatically marked on the tape when the ● RECORD button is pressed or when a timer recording starts.

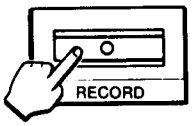

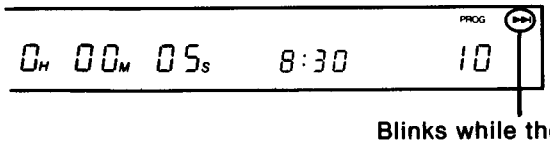

Blinks while the index signal is being marked.

Notes

- Index signals will not be marked on the tape when the recording is started by releasing the recording pause mode.
- The index function operates also with the index signals marked using the index function of other recorders.

Index signals can be marked at any desired point on the tape during recording, timer recording or normal playback.

At the point where an index signal is to be marked, press the INDEX MARK button.

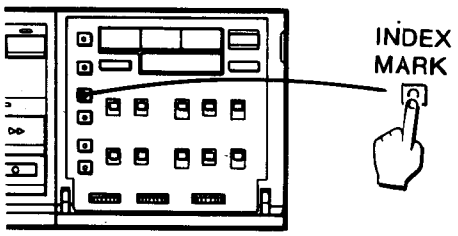

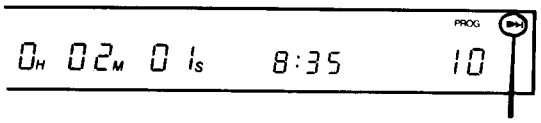

Blinks while the index signal is being marked.

Notes

- During playback, the sound recorded on the tape will be muted while the index signal is being marked, but the recording will not be affected.
- Index signals can be marked on cassette tapes without a safety tab (including commercially available prerecorded video tapes).

MC-Service

INDEX SCAN

—To play back the beginning of each programme in sequence

1 Insert a cassette that has index signals marked.
2 Press the INDEX button once. The ▶▶| and →→ indicators will blink alternately, and the index number 0 is displayed.

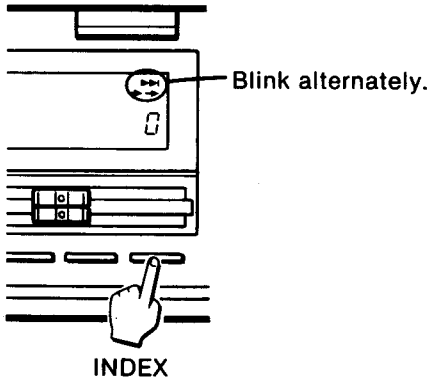

3 To scan the previous programmes, press the ◀◀ REW button.
To scan the programmes ahead, press the ▶▶ FF button.
The ▶▶| and →→ indicators will blink simultaneously and the tape will be rewound or rapidly advanced to the next index signal marked.
Whenever an index signal is detected, the tape will be played back for approximately 10 seconds, and then rewound or rapidly advanced to the next index signal.
Every time an index signal is detected and playback begins, the displayed index number increases.
4 At the desired programme, press the the ▶ PLAY button. Normal playback of that programme will begin.

INDEX SEARCH

—To locate the desired programme

You can locate the desired programme and play it back automatically by designating the number of its index signal. Up to the 15th index signal from the present position on the tape can be located.

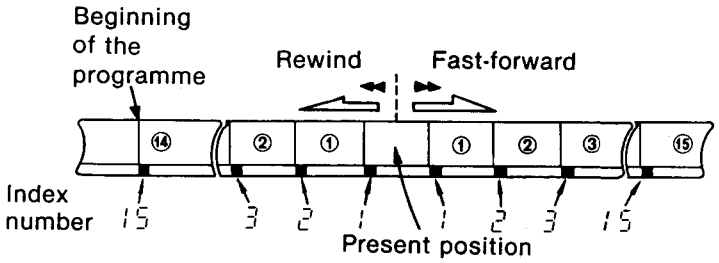

1 Insert a cassette that has index signals marked.
2 Press the INDEX button several times until the index number of the desired programme is displayed.
For instance, to locate the second programme ahead, two index signals should be detected, so press the INDEX button until " 2 " is displayed. On the other hand, to locate the second programme behind, three signals should be detected, so press the button until " 3 " is displayed.

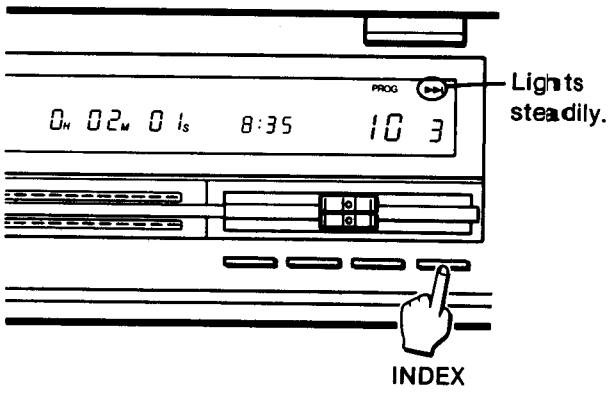

- If you enter an incorrect index number, press the ■ STOP button to reset the display.

3 To locate a previous programme on the tape, press the ◀◀ REW button.
To locate a programme ahead, press the ▶▶ FF button.

The tape will be rewound or rapidly advanced. Every time an index signal is detected, the displayed index number will decrease. When the number reaches 0, play back of your desired programme will begin.

Notes

- The index function can be activated during playback, as well as from stop mode.
- While the index signals are being scanned or located, there will be no picture or sound.
- If the tape is rewound to the beginning during index scan or index search, playback will begin automatically.
- If the tape reaches the end during index scan or index search, the tape will be rewound automatically.

When the desired programme cannot be played back with the index function, check the following:

- The nearest index signal may not have been counted. If the point where you pressed the ◀◀ REW or ▶▶ FF button is fairly close (within 2 minutes of the normal tape-run) to the nearest index signal, that signal will not be counted. In such a case, designate one number less than the actual number.
- Is there a space of more than 2 minutes between two index signals? If there is more than one index signal marked within an interval of 2 minutes of the normal tape-run, the mechanism may not function properly.

TO ERASE INDEX SIGNALS

Erasing while index scanning—To erase the index signals in sequence

1 Stop the tape with the ■ STOP button.
2 Press the INDEX button once.
3 To erase the previous index signals on the tape, press the ◀◀ REW button. To erase the index signals ahead, press the ▶▶ FF button.
The tape will be rewound or rapidly advanced to the next index signal and playback will begin.
4 **With the tape played back** for approx. 10 seconds, press the INDEX ERASE button. The → indicator will stop blinking while the ▶▶| indicator continues blinking and the index signal will be erased.

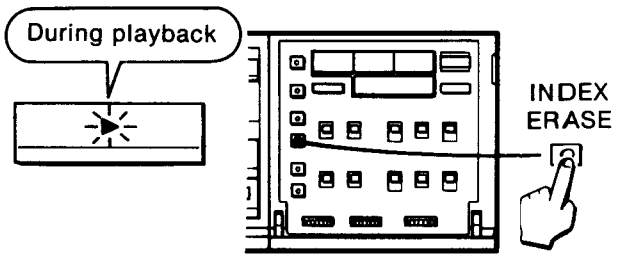

After the erasure, index scan will resume. At each index signal located, press the INDEX ERASE button to erase the signal.
To stop index scanning, press the ■ STOP button.

Erasing while index searching—To erase a particular index signal

1 Stop the tape with the ■ STOP button.
2 Press the INDEX button several times until the number of the index signal to be erased is displayed.
3 To locate and erase the previous index signal, press the ◀◀ REW button. To locate and erase the index signal ahead, press the ▶▶ FF button.
4 **With the tape played back** for approx. 10 seconds, press the INDEX ERASE button. The ▶▶| indicator will blink and the index signal will be erased.

After the erasure, normal playback will begin.

1-10. TIMER-ACTIVATED RECORDING

Using the built-in timer, you can make six recordings on any day or every day, this week, next week or the week after next, or on the same day every week.

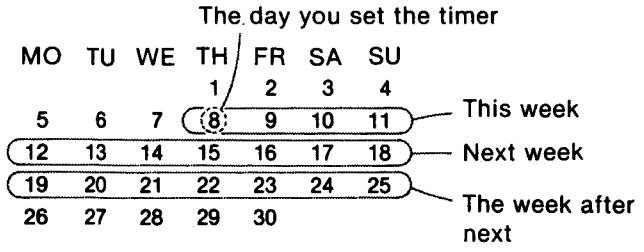

Check before setting the timer

- Is the clock set to the correct day and correct time? Timer setting can only be made after the clock has been set.
- Is a cassette inserted in the recorder?
- Is the cassette long enough to record the programmes?
- Does the cassette have a safety tab on the bottom?
- Is the INPUT SELECT switch set to TUNER for recording TV programmes?

Note: The timer cannot be set during playback.

TO SET THE TIMER

Example: To record a PROGRAM 2 broadcast from 9:00 AM to 11:25 AM on Saturday next week.

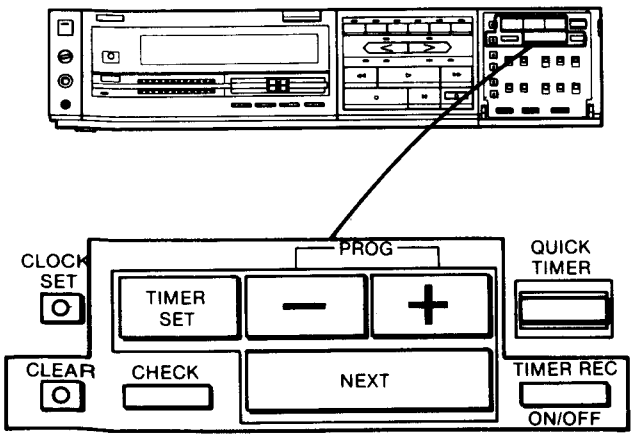

NEXT button
Every time you press the NEXT button, the item to be preset will blink and you will be setting the item.

PROG +/– buttons
To set the day of the week, the time and the programme number, press the + button to advance, and the – button to go back.

Week and day indicators
By pressing the + PROG button, the week and day indicators change as follows:
Ex. Today is Saturday.

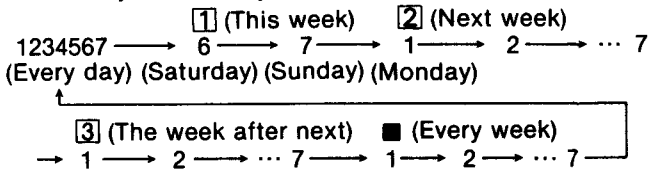

To record at the same time every day, select "1234567". To record at the same time and day every week, select the desired day indicator together with "■ (every week)" indicator.

Setting procedure

1 Press the TIMER SET button. (If the recorder is off, it will be turned on automatically.) An empty event number for which no timer setting has been made will appear.

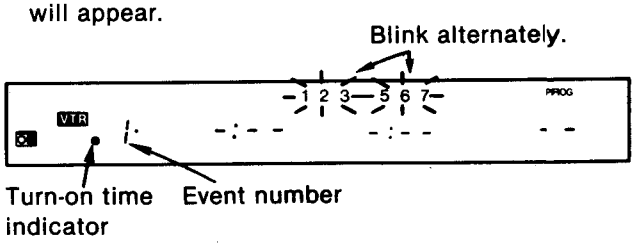

2 Set the week and day by pressing the + or – PROG button.

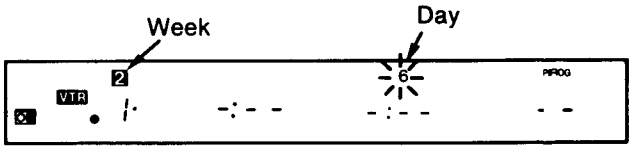

3 Press the NEXT button and set the turn-on hour by pressing the + or – PROG button.

4 Press the NEXT button and set the minute by pressing the + or – PROG button.

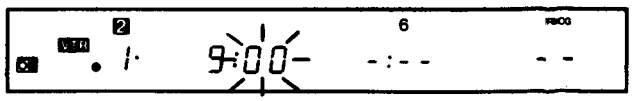

5 Press the NEXT button and set the turn-off hour and minute as in turn-on time setting.

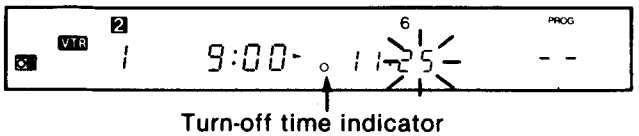

Turn-off time indicator

6 Press the NEXT button and select the programme to be recorded with the + or – PROG button.
To record the signals from the equipment connected to the VIDEO IN and AUDIO IN jacks, set the INPUT SELECT switch to LINE/PCM so that "AU" indication appears.

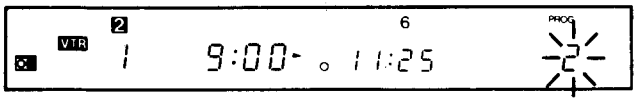

7 Press the NEXT button.
The display reverts to the time counter and the current time.

To set more events, press the TIMER SET button again to display the next event number. Repeat steps 2 to 7 above.

8 Press the TIMER REC ON/OFF button. The TIMER REC indicator appears and the recorder is turned off.

Appears.

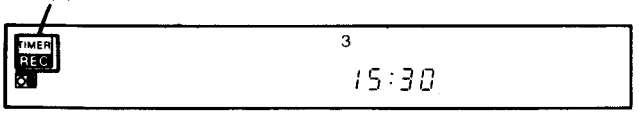

At the preset turn-on time, recording will start automatically and will stop at the preset turn-off time.

Note
If the inserted cassette does not have the safety tab, the cassette will be automatically ejected when the TIMER REC ON/OFF button is pressed.

ONCE THE TIMER REC INDICATOR HAS BEEN DISPLAYED, NO FUNCTION OF THE RECORDER CAN BE ACTIVATED, except for checking the timer setting.
To operate the recorder after setting the timer for recording, press the TIMER REC ON/OFF button so that the TIMER REC indicator goes off. To reactivate the timer recording standby mode, be sure to press the TIMER REC ON/OFF button again.

WHILE SETTING THE TIMER

To change the preset item
Press the CLEAR button and repeat the timer setting procedure from Step 1.

To record to the end of the tape
Set the turn-off time to a time after the tape will reach its end.

BEFORE OR DURING TIMER RECORDING

To check the timer settings
Press the CHECK button. Each time the CHECK button is pressed, the preset events are displayed in sequence.

To change the settings
1 Press the TIMER REC ON/OFF button if the TIMER REC indicator is diplayed.
2 Press the CHECK button sufficient times to display the event to be changed in the display window.
3 Press the TIMER SET button.
4 Press the NEXT button sufficient times until the item to be changed blinks.
5 Change the setting with the + or – PROG button.
6 Press the NEXT button until the time counter and the current time appear.
7 Press the TIMER REC ON/OFF button again to reactivate the timer.

To erase the timer setting of an event
1 Press the TIMER REC ON/OFF button if the TIMER REC indicator is displayed.
2 Press the CHECK button sufficient times to display the event to be erased.
3 Press the CLEAR button.
The event will be erased from the memory.
4 If other events have been preset for recording, press the TIMER REC ON/OFF button again to reactivate.

Note: When the TIMER REC indicator is displayed, the timer setting cannot be erased.

MC-Service

If the tape reaches the end during timer recording
The recording will stop and the tape will be rewound to the beginning. Then after about a second, the recorder will be turned off.

To stop the on-going timer recording
Press the TIMER REC ON/OFF button so that the TIMER REC indicator goes off. The unit will be turned off automatically after about a second.

When two timer settings overlap
If two timer settings are preset as in the following example, the recording of the event 2 will begin before the first recording is completely finished. Consequently, the event 1 will be cut off in the middle of its recording.

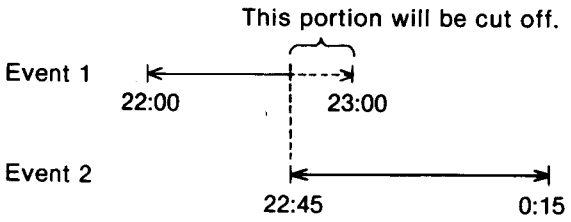

AFTER TIMER RECORDING

When a timer recording is finished, the setting (except the everyday or every week setting) will be eliminated and the next timer settings will move up one event position each. For example, if you have preset 4 events, when the first timer recording is finished, the fourth event position will be vacant. If the TIMER SET button is pressed. "4" will appear in the window.

When a power interruption occurs

If the clock shows "0 : 00" blinking, the power has been interrupted for more than 30 minutes (when the built-in battery has been charged at least 48 hours) and all the timer settings will have been erased. Reset the clock and the timer settings.

If the power has been interrupted for less than 30 minutes, the timer settings are retained in the memory and the on-going timer recording will resume when the power is resupplied.

QUICK TIMER RECORDING

—To set the recording duration and to turn off the unit automatically

During recording, you can set the recording duration for up to 4 hours in units of 30 minutes by pressing the QUICK TIMER button. After the preset timer has elapsed, recording stops and recorder is turned off automatically.

1 Start recording.
2 Press the QUICK TIMER button to set the recording duration.
The TIMER REC indicator will appear.

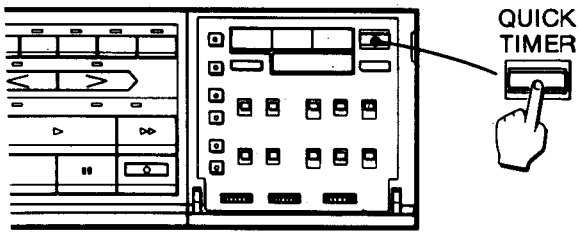

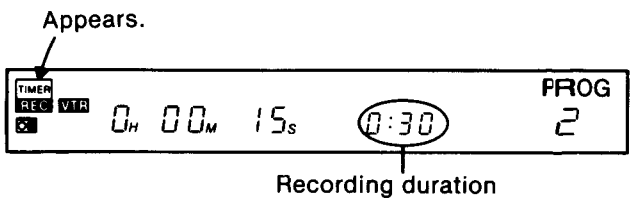

Each time you press the QUICK TIMER button, the indication changes :
0 : 30 → 1 : 00 → 1 : 30 → 2 : 00 → ... 3 : 30 → 4 : 00

As the recording continues, the duration indication decreases minute by minute to 0 : 00 and the recording stops. The recorder is turned off automatically.

To extend the recording duration
The on-going recording duration can be extended simply by pressing the QUICK TIMER button.
The duration will be extended in units of 30 minutes with each pressing.
Example: When 2 : 25 is indicated,
2 : 25 → 2 : 30 → 3 : 00

To cancel the quick timer function
Press the TIMER REC ON/OFF button so that the TIMER REC indicator goes off. The recorder will be turned off automatically after about a second.

To stop quick timer recording momentarily
Press the ▮▮ PAUSE button. To resume recording, press the same button again.

Note
During quick timer recording, only the QUICK TIMER, ▮▮ PAUSE and TIMER REC ON/OFF buttons can be activated. To activate the other buttons, press the TIMER REC ON/OFF button so that the TIMER REC indicator goes off.

1-11. TAPE EDITING

To edit a tape, you will need two video recorders: one is to play back the original tape and the other is to record. To make the most of this unit's excellent editing performance, using this unit for playback is recommended.

CONNECTIONS

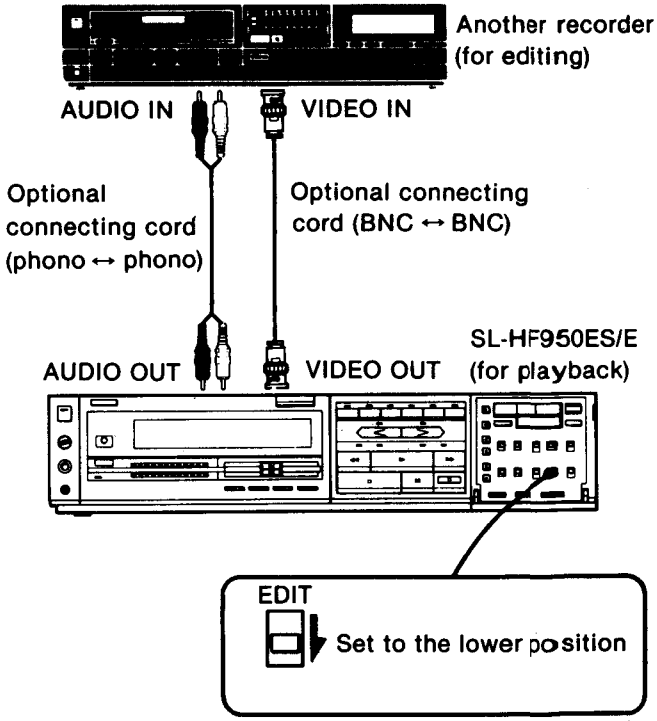

OPERATION

Set the INPUT SELECT switch of the recorder for editing to LINE (line input), if provided.
Set the recorder for playback to playback mode, and the recorder for editing to record mode.

EDIT switch
Generally, a recorder electrically rectifies the original signals recorded on a tape for optimum viewing on a TV or monitor. However, this rectification is not needed and even result in over-rectification, when the signal is being recorded onto a tape in another recorder. When the EDIT switch is set to the lower position, the rectification circuit is cancelled. This allows direct recording of the original signal onto the tape in another recorder.

CAUTION
Television programmes, films, video tapes and other materials may be copyrighted. Unauthorized duplication of such material may be contrary to the provision of the copyright laws.

AUDIO AND VIDEO INSERT

By using the INSERT buttons, you can easily "insert" (re-record) new sound or picture onto a pre-recorded tape.

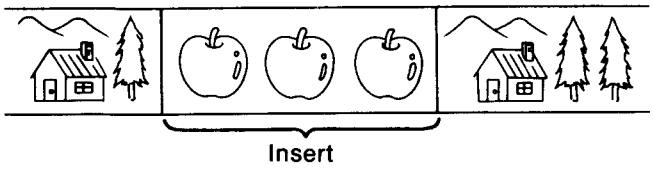

Audio insert—Inserting new sound (monaural) on the conventional audio track without erasing the original picture and Beta hi-fi sound on the video track

Video insert—Inserting new picture and/or Beta hi-fi sound without erasing the original sound on the conventional audio track

Audio and video insert—Inserting new sound and picture onto both the video and conventional audio tracks

The recording after audio, video or audio/video insertion

Audio insert	Conventional audio track Newly inserted monaural sound Video track
Video insert	Newly inserted picture and/or Beta hi-fi sound
Audio and video insert	Newly inserted monaural sound Newly inserted picture and/or Beta hi-fi sound

AUDIO AND VIDEO SOURCE CONNECTION

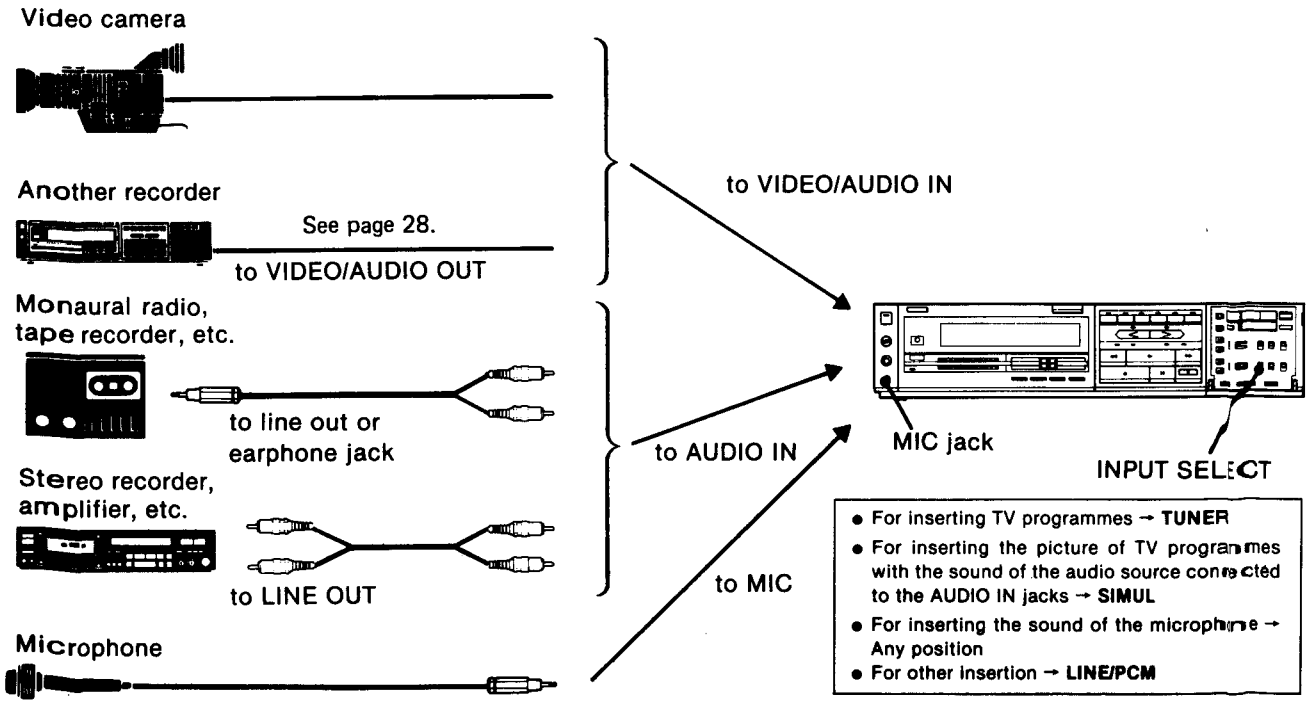

OPERATION

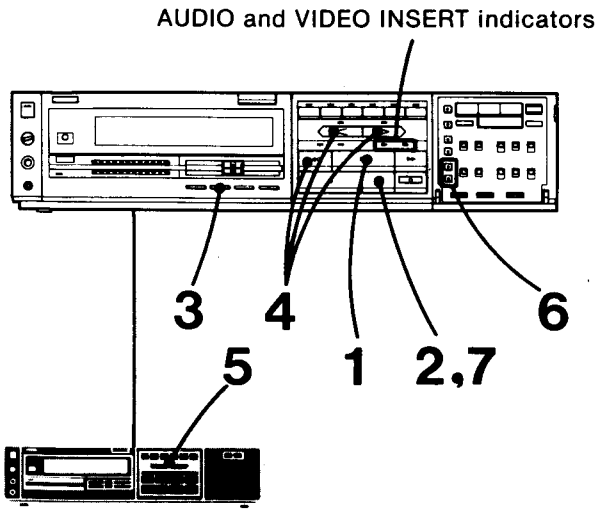

1 Play back the original tape on which you want to make insertion.
2 At the point where you want to stop the insertion, press the ▮▮ PAUSE button.

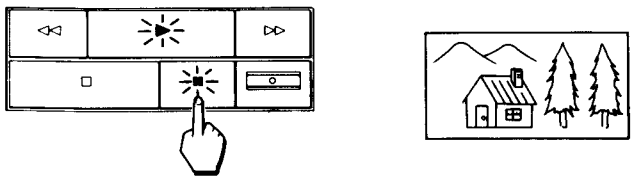

If necessary, press the > FWD or REV < button to locate the point accurately, then press the ▮▮ PAUSE button.

3 Press the COUNTER RESET button.
The time counter will be reset to "0H00M00S".
4 Using the ◀◀ REW button and the > FWD and REV < buttons, locate the point where you want to start the insertion, and set the recorder to playback pause mode.

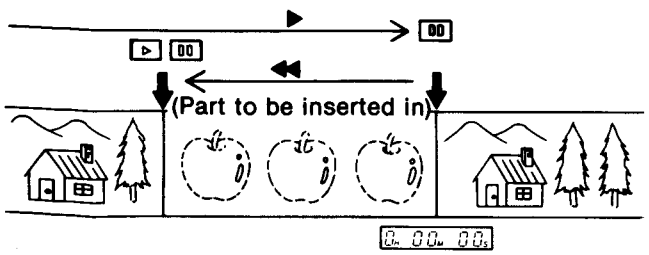

5 Play the audio and/or video source.
6 For "Audio insert", press the AUDIO INSERT button.
For "Video insert", press the VIDEO INSERT button.
For "Audio and video insert", press the AUDIO and VIDEO INSERT buttons.
The corresponding AUDIO and/or VIDEO INSERT indicators will light.

7 Press the ▮▮ PAUSE button. The audio and/or video insert will start.

At the "0H00M00S" point on the counter, the insertion will stop.

To stop insertion momentarily, press the ▮▮ PAUSE button. To resume insertion, press the same button again.

To stop the on-going insertion, press the ■ STOP button.

Monitoring the sound being inserted

- During audio/video insertion, the sound to be listened to can be selected by setting the BETA HI-FI selector and the AUDIO NONITOR selector to the desired position.
- For the sound from the microphone, set the BETA HI-FI selector to NORMAL and listen to the sound through headphones.

Notes

- During insertion, the ● RECORD, ▶ PLAY, ◀◀ REW, ▶▶ FF, FRAME and variable speed playback buttons will not function.
- If a microphone is connected to the MIC jack, the sound from the microphone will always be recorded on the conventional audio track.
- If the safety tab of the cassette has been removed, the cassette will be ejected automatically when the INSERT button is pressed.
- If the video and/or audio insertions are made on the blank space on the original tape, this part will be muted in normal or double-speed playback mode, as there is no control signal recorded.

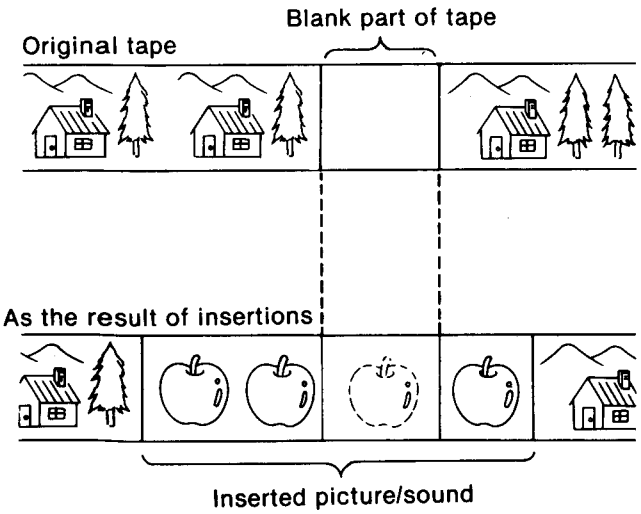

1-12. TV STATION PROGRAMMING

Automatic and manual programming are available. Automatic programming automatically presets receivable stations from the lowest frequency to the highest. Manual programming is useful for presetting selected stations in any desired sequence.

To start programming, turn on the recorder by pressing the ON/STANDBY switch and set the INPUT SELECT switch to TUNER.

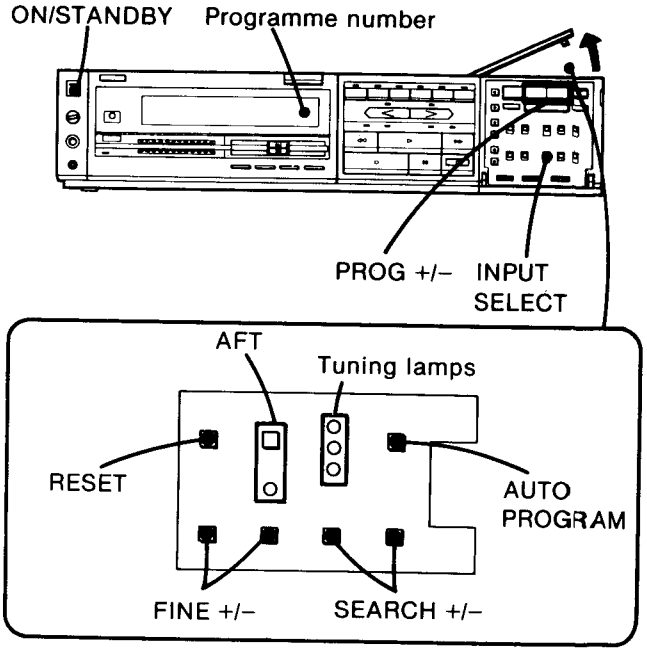

AUTOMATIC PROGRAMMING

Press the AUTO PROGRAM button. Up to 30 receivable stations will be preset one by one from programme position 1. When no more stations can be located, programme number " 1 " will light on the programme indicator and automatic programming will stop.

MANUAL PROGRAMMING

1 Press the + or – PROG button to select the programme position.
  + for a higher-numbered programme position
  – for a lower-numbered programme position

2 Press the + SEARCH button to locate a station with higher frequency and the – SEARCH button to locate a station with lower frequency.
When a station has been received, the search will stop. Press the + or – SEARCH button again, until the desired station is received.

Repeat these steps for all desired stations.

MC-Service

FINE TUNING OF A WEAK STATION

If the picture on a particular programme position is not acceptable, keep the + or – FINE button pressed until the picture becomes clearer. When either of the FINE buttons is pressed, the AFT of the selected station is deactivated and the AFT lamp goes off. To view this particular station, keep the AFT deactivated. (Do not press the AFT button.)
When other memorized stations are selected, the AFT automatically activates.

ELIMINATING NOISE ON UNUSED PROGRAMME POSITIONS

Simply press the RESET button. The annoying noise will be eliminated.

Tuning lamps
The tuning lamp lights to show the current tuning band.
V_L : E2 - E4, E5 - E12 and Cable TV S1 and S2
V_H : Cable TV S3, M1 - M10 and U11 - U20 channels
U : E21 - E68 channels

Note : Cable TV channels are receivable on the SL-HF950ES only.

1-13. CLOCK SETTING

When you connect the mains lead to a mains outlet, the clock indicates "0 : 00" with the two dots blinking.

Time indication

AM			
12 : 00 (midnight)	1 : 00		11 : 00
↓	↓		↓
0:00	1:00	.....	11:00

PM					
12 : 00 (noon)	1 : 00	2 : 00		10 : 00	11 : 00
↓	↓	↓		↓	↓
12:00	13:00	14:00	.....	22:00	23:00

Day indication

MO (Monday)	TU (Tuesday)	WE (Wednesday)	TH (Thursday)	FR (Friday)	SA (Saturday)	SU (Sunday)
↓	↓	↓	↓	↓	↓	↓
1	2	3	4	5	6	7

NEXT button
Each time the NEXT button is pressed, the item to be set blinks to let you know the setting order.

+/– buttons
The + and – PROG buttons can be pressed in two ways.

When you hold a button down, the digits will advance continuosly until the button is released.

When you press and immediately release a button, the digits will advance by one.

Example: To set the clock to 7:35 p.m. (19:35) on Tuesday

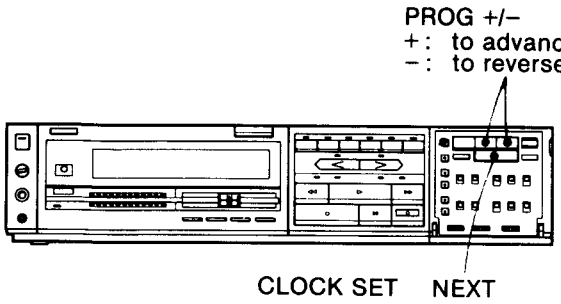

1 Press CLOCK SET for more than a second.

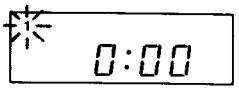

2 Set the day by pressing + or – PROG.

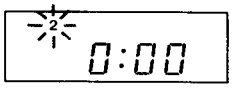

3 Press NEXT and set the hour by pressing + or – PROG.

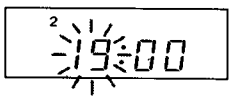

4 Press NEXT and set the minute by pressing + or – PROG.

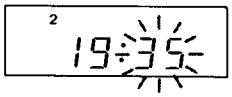

5 With an announced time signal, press NEXT.
The clock now starts operating, showing the correct time.

The dots of the colon alternately blink every 30 seconds.

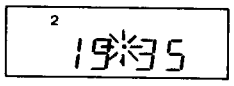

Zero second adjustment
Press the CLOCK SET button quickly (for less than a second).
While the upper dot is blinking, the clock is set to the time displayed 00 second. For example, if the clock time is 19:35, it is set to 19:35, 00 second.
While the lower dot is blinking, the clock advances one minute and is set to the time displayed 00 second. For example, if the clock time is 19:35, it is set to 19:36, 00 second.

To change the actual clock setting
Press the CLOCK SET button for more than a second and repeat the clock setting procedure from step 1.

Note
If you have pressed the CLOCK SET button inadvertently, press the NEXT button enough times until the dots of the colon blink.

When the power has been interrupted for more than 30 minutes, the time indication " 0:00 " blinks, showing that the clock must be reset.
If the power has been interrupted for less than 30 minutes, the displayed time remains correct.

MC-Service

SECTION 2
DISASSEMBLY

2-1. DISASSEMBLY OF CABINET

1) Remove the four case set screws ❶.
2) Remove the upper case ❷ in the direction shown by the arrow Ⓐ.
3) Loosen the seven screws ❸.
4) Remove the plate bottom ❹ in the direction shown by the arrow Ⓑ.
5) Remove the two screws (BVTP3 x 8) ❺.
6) Remove the LS front panel ❻ in the direction shown by the arrow Ⓒ.
7) Remove the four screws ❼.
8) Remove the four claws ❽ in the direction shown by the arrow Ⓓ, then remove the front panel ❾ in the direction shown by the arrow Ⓔ.

Note: Follow the disassembly procedure in the numerical order given.

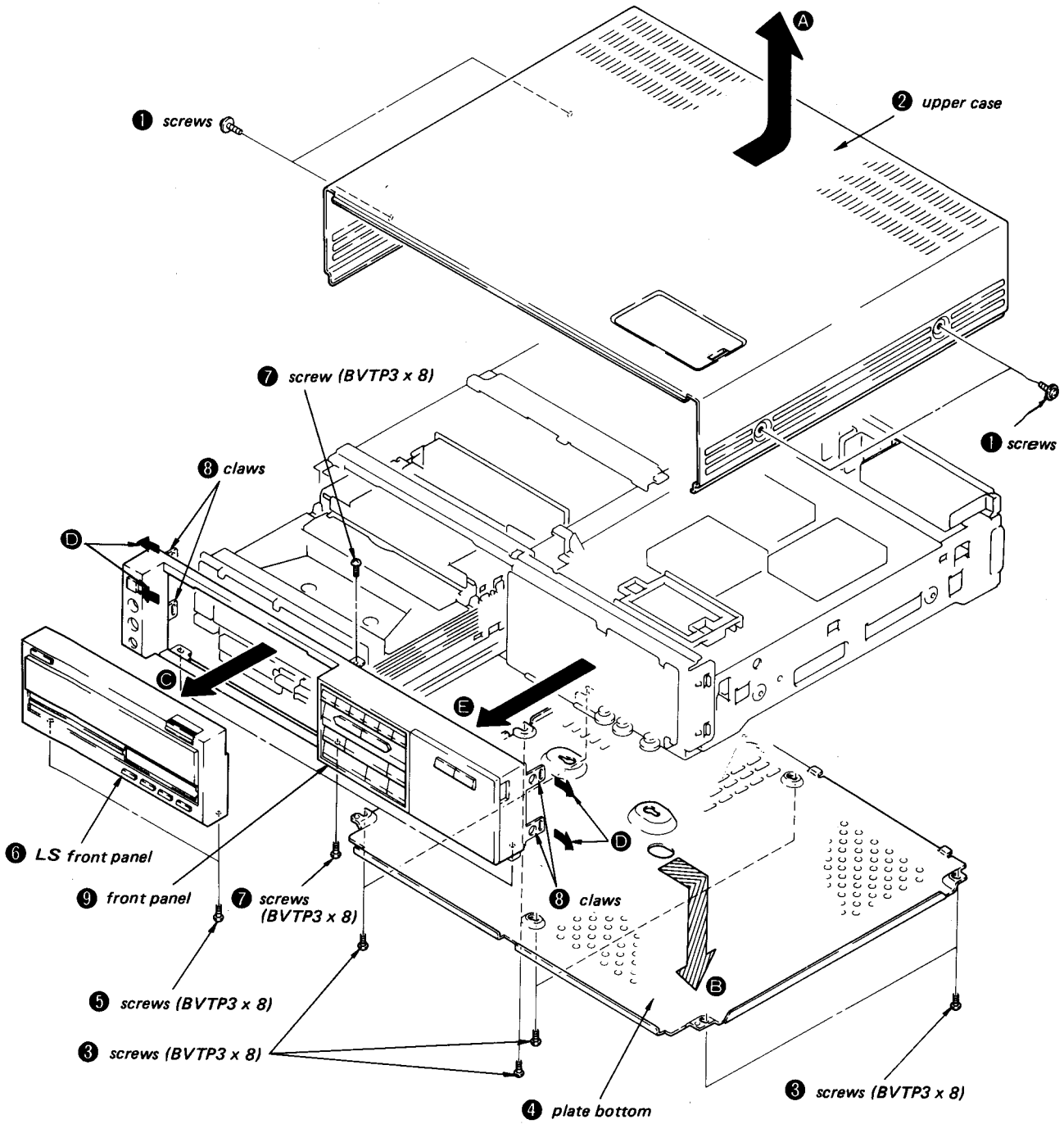

2-2. REMOVAL OF THE TA-36/37 BOARD

1) Remove the three screws (BVTP3 x 8) ❶.
2) Remove the TA-36/37 board ❷ in the direction shown by arrow.

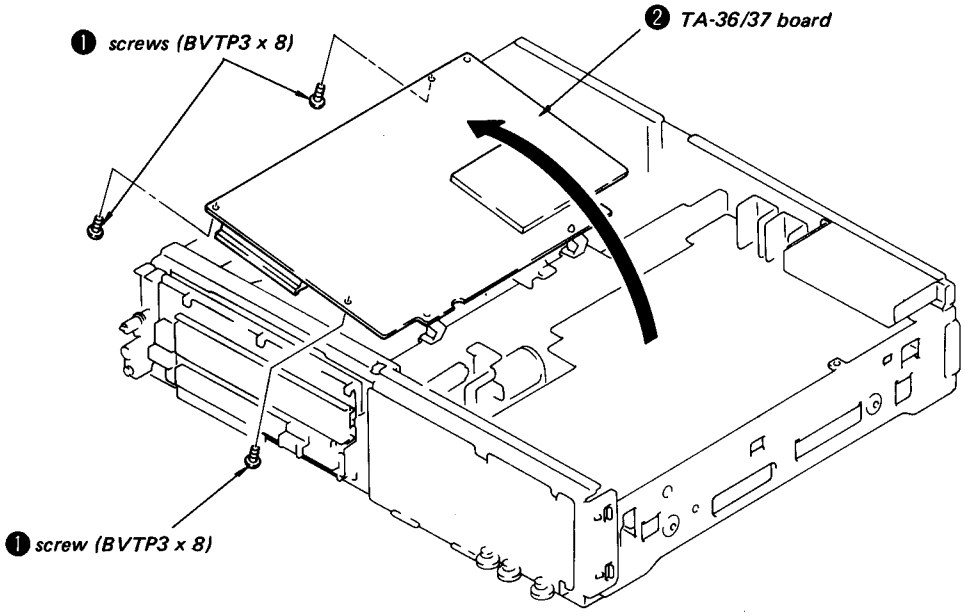

2-3. REMOVAL OF THE SS-50 BOARD

1) Remove the TA-36/37 board.
(Refer to section 2-2. REMOVAL OF THE TA-36/37 BOARD.)
2) Remove the two screws (BVTP3 x 8) ❶.
3) Remove the RF modulator ❷.
4) Remove the four screws ❸.
5) Remove the SS-50 board ❹ in the direction shown by the arrow.

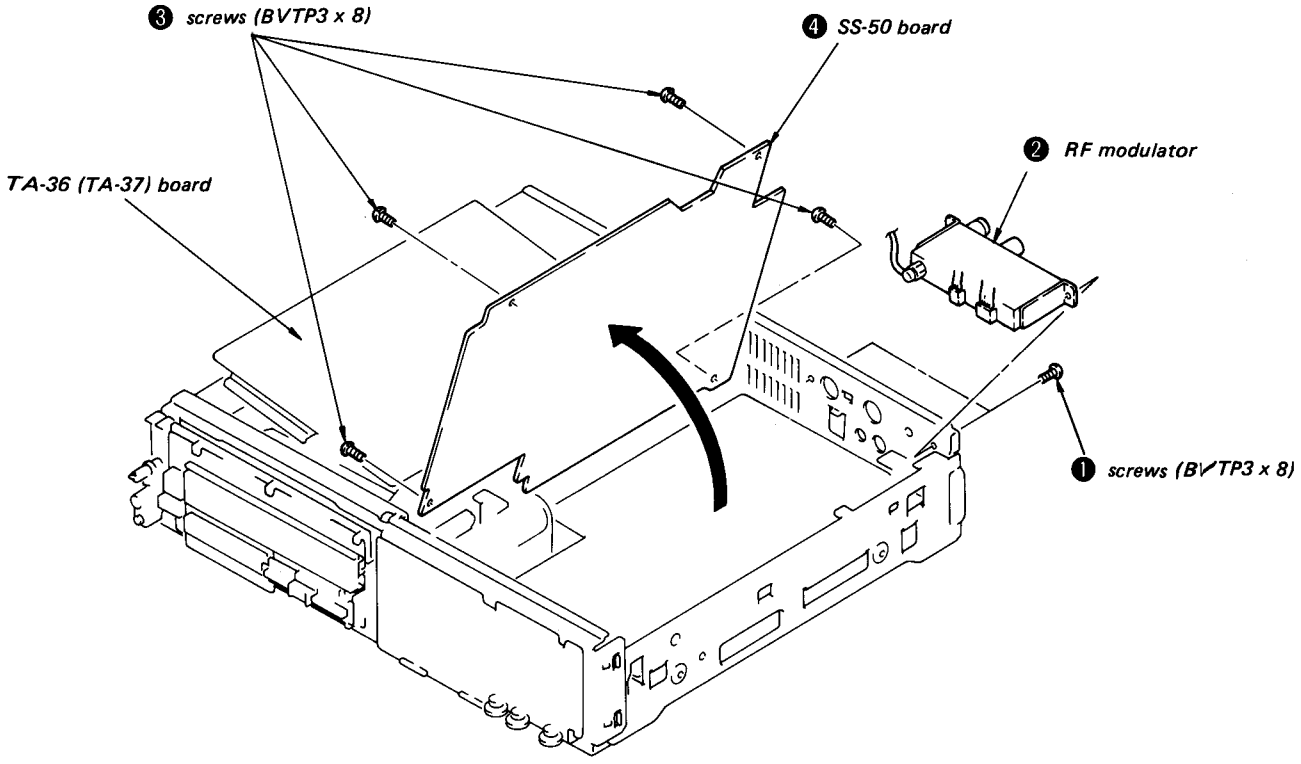

2-4. REMOVAL OF THE YC-40 BOARD

1) Stand the set with the left side panel on the bottom.
2) Remove the two screws (BVTP3 x 8) ❶.
3) Remove the four screws (BVTP3 x 8) ❷.
4) Remove the YC-40 board ❸ in the direction shown by the arrow.

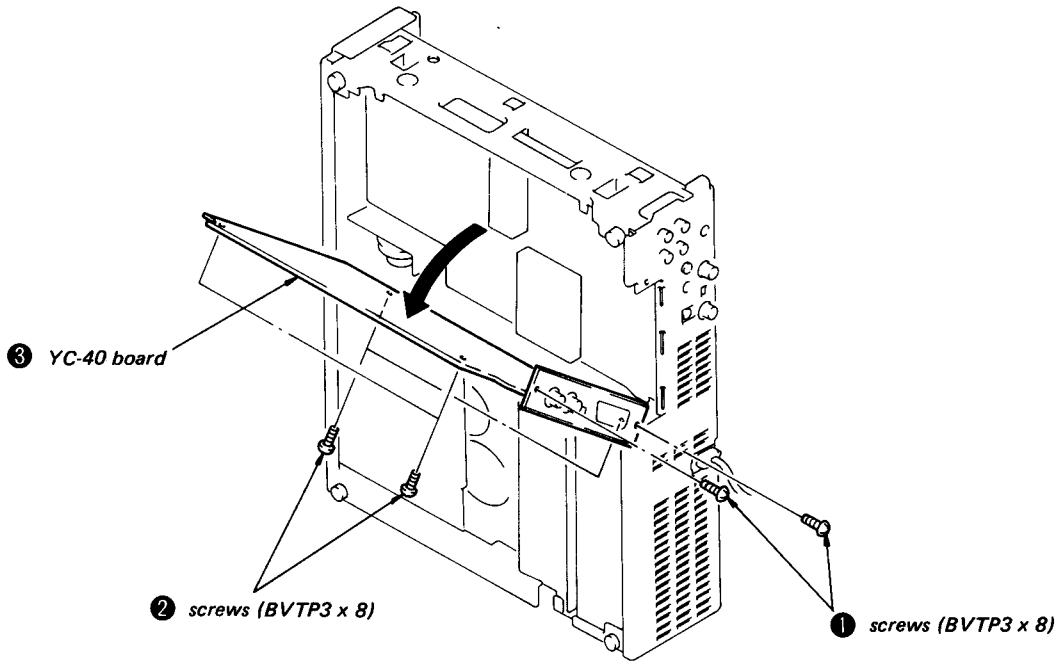

2-5. REMOVAL OF THE FR-20 BOARD

1) Remove the two screws (BVTP3 x 8) ❶.
2) Pull out the two connectors ❷.
3) Pull out the connector ❸.
4) Remove the FR-20 board ❹ in the direction shown by the arrow Ⓐ.

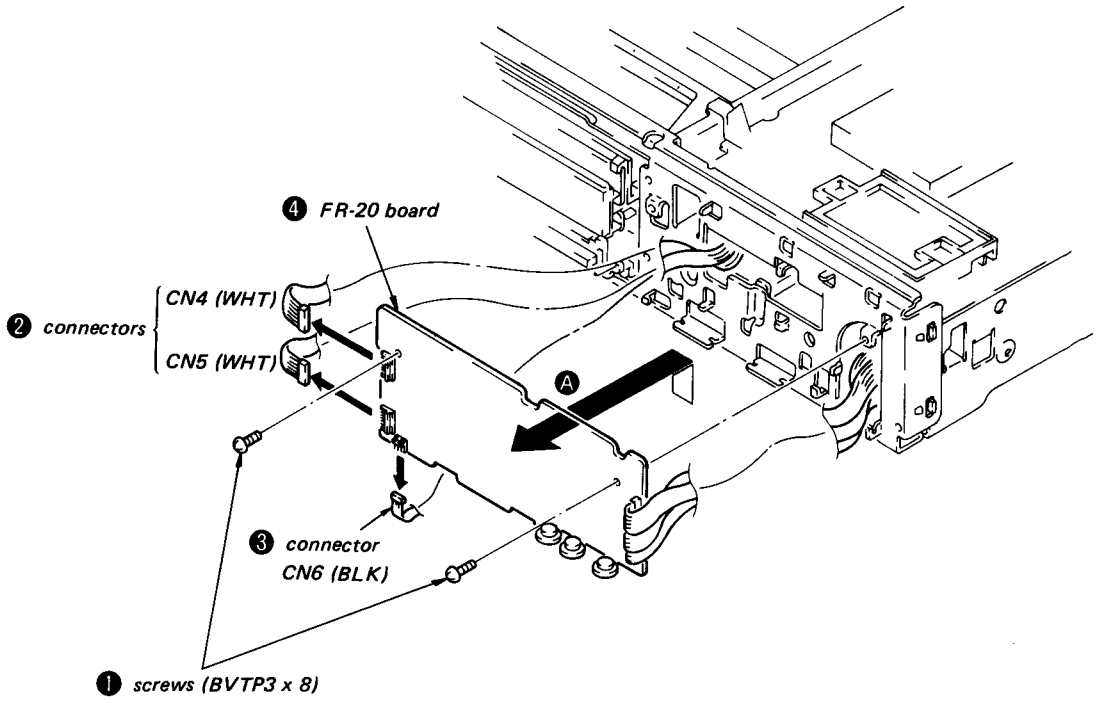

2-6. REMOVAL OF THE FL-8, FL-9 BOARD

1) Remove the one screw (BVTP3 x 8) ❶.
2) Remove the level meter board ❷.
3) Pull out the connector ❸.
4) Remove the one screw (BVTP3 x 8) ❹.
5) Pull out the connector ❺.
6) Remove the three claws ❻ in the direction shown by the arrow Ⓐ, then remove the FL-8 board ❼ in the direction shown by the arrow Ⓑ.
7) Remove the two screws (BVTP3 x 8) ❽.
8) Remove the FL-9 board ❾.
9) Pull out the two connectors ❿.

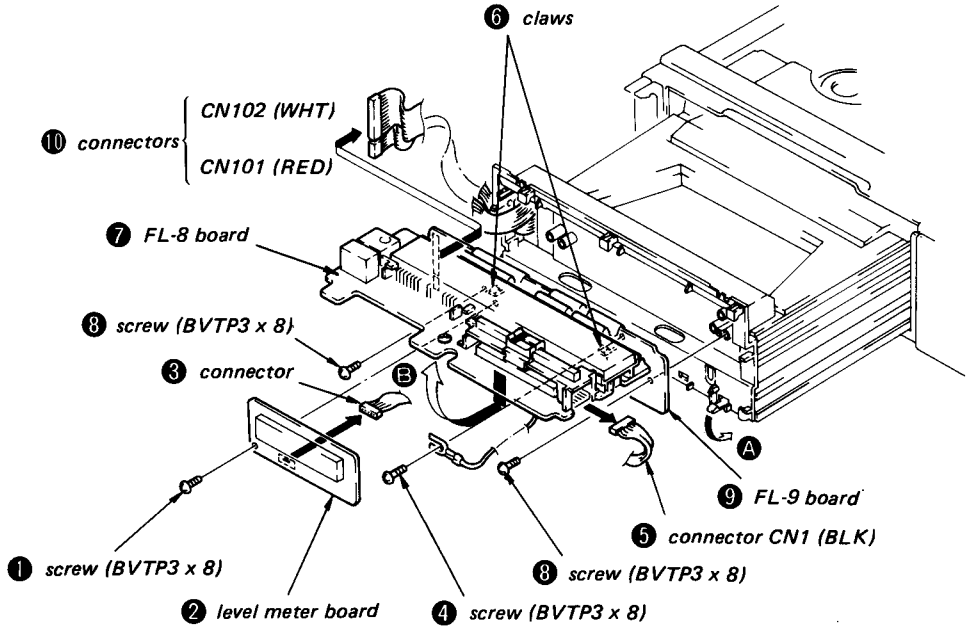

2-7. REMOVAL OF THE RP-31 BOARD

1) Remove the two screws (BVTP3 x 8) ❶.
2) Remove the RP-31 board block ❷ in the direction shown by the arrow Ⓐ.
3) Pull out the three connectors ❸.
4) Remove the two shield cases ❹.

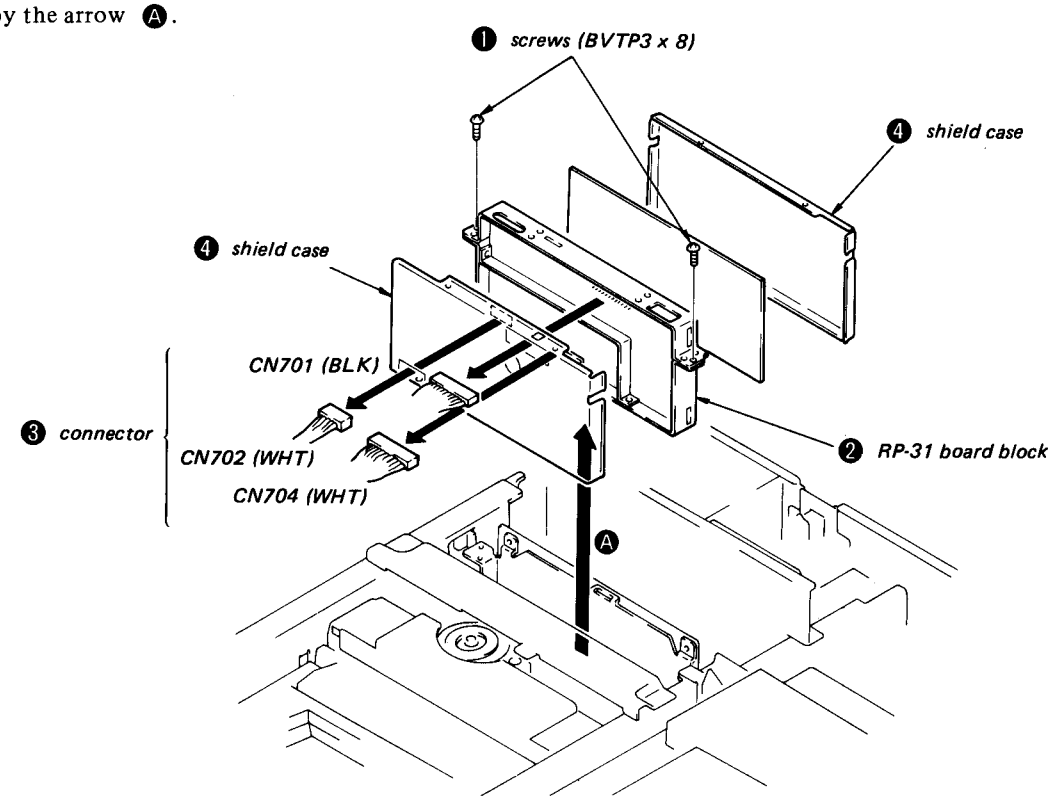

2-8. REMOVAL OF THE POWER BLOCK

1) Remove the two screws (BVTP3 x 8) ❶.
2) Remove the cord stopper ❷.
3) Remove the five screws (BVTP3 x 8) ❸.
4) Pull out the five connectors ❹.
5) Remove the power block ❺ in the direction shown by the arrow Ⓐ.

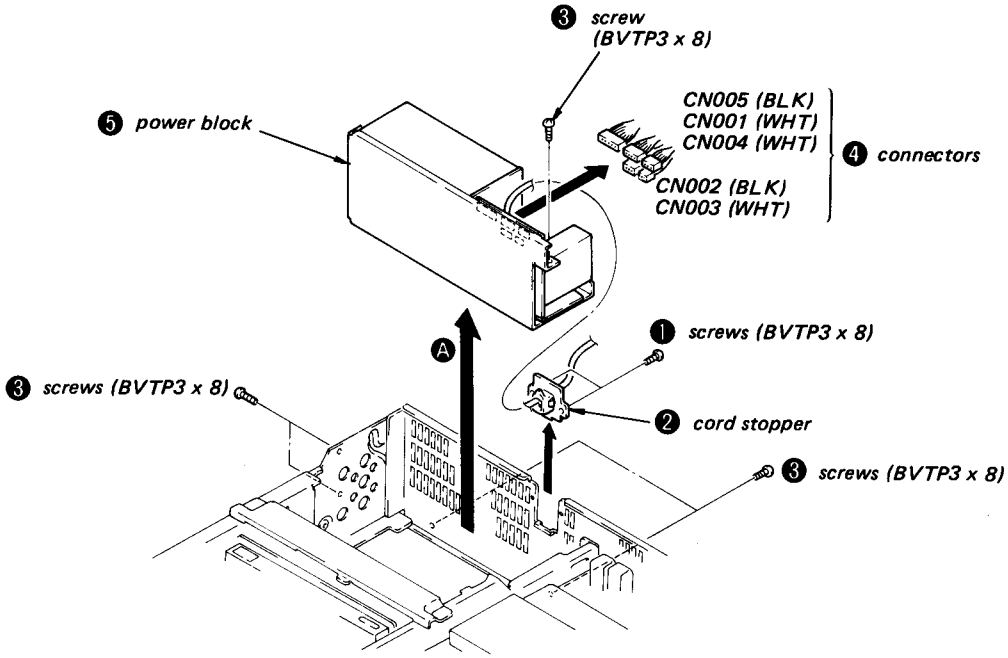

2-9. REMOVAL OF THE REEL BLOCK ASSEMBLY

1) Place the set upside down.
2) Remove the one screw (BVTP3 x 8) ❶.
3) Remove the plate bottom (LS) ❷ in the direction shown by the arrow Ⓐ.
4) Remove the one screw (BVTP3 x 8) ❸.
5) Remove the level meter board ❹.
6) Pull out the connector ❺.
7) Remove the four screws (BVTP3 x 8) ❻.
8) Remove the reel block assembly ❼ in the direction shown by the arrow Ⓑ.

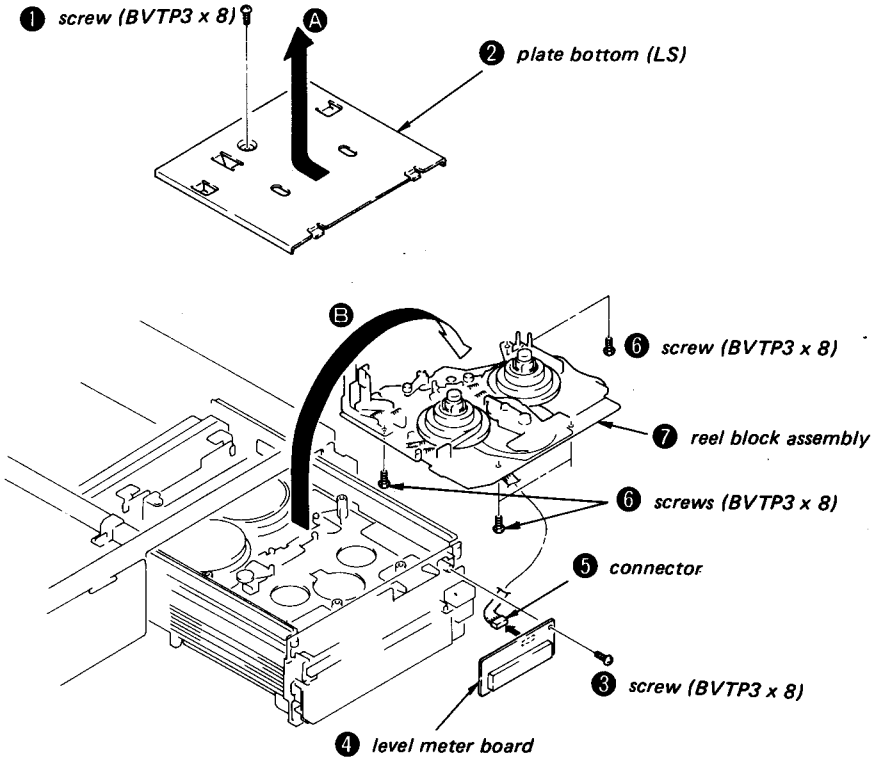

2-10. REMOVAL OF THE LS BLOCK ASSEMBLY (1)

1) Remove the TA-36/37 board.
   (Refer to section 2-2. REMOVAL OF THE TA36/37 BOARD.)
2) Remove the two screws (BVTP3 x 8) ❶.
3) Pull out the two connectors ❷ from the SS-50 board.
4) Remove the LS gear block ❸.
5) Remove the stop ring ❹.
6) Remove the U/D arm block ❺.

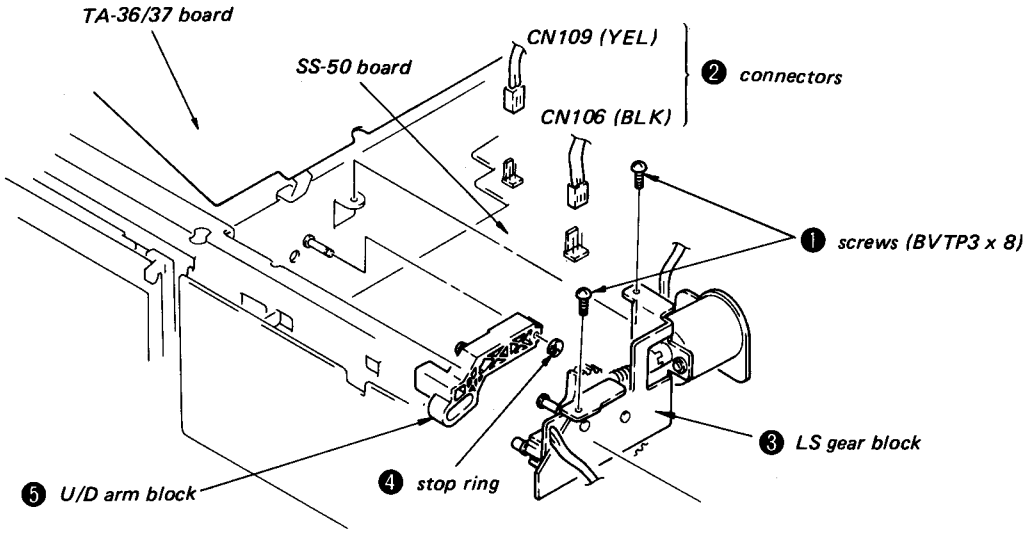

2-11. REMOVAL OF THE LS BLOCK ASSEMBLY (2)

1) Pull out the fifteen connectors ❶ ~ ❻.
2) Turn the stopper ❼ in the direction shown by the arrow.
3) Remove the LS block assembly ❽.

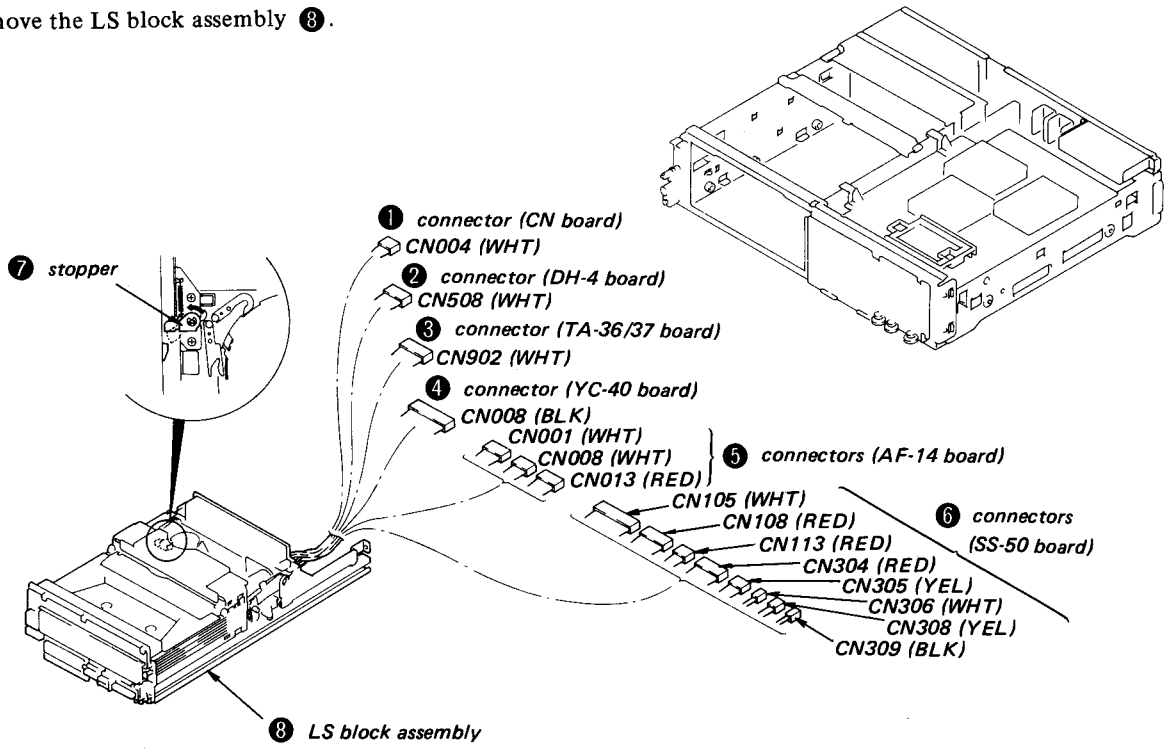

2-12. INTERNAL VIEWS

— Top Side —

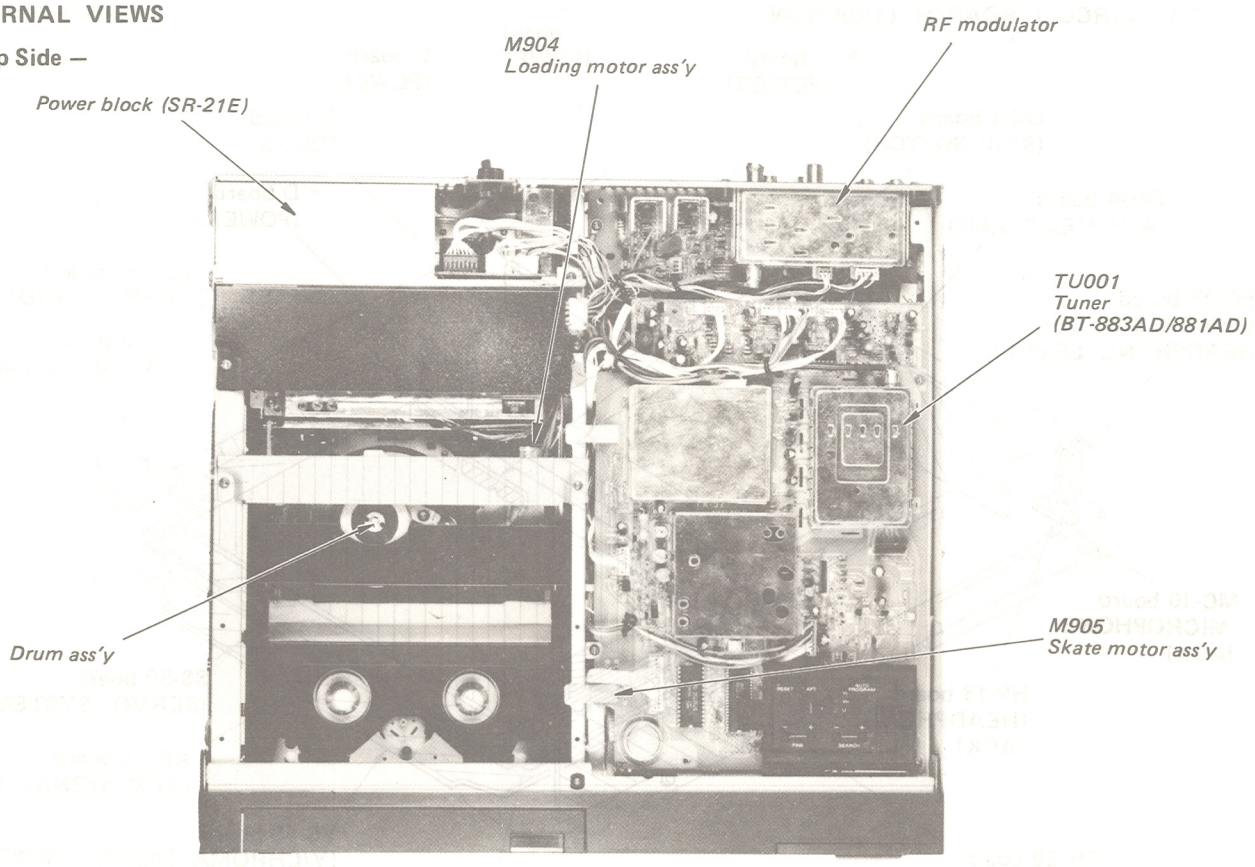

— Bottom Side —

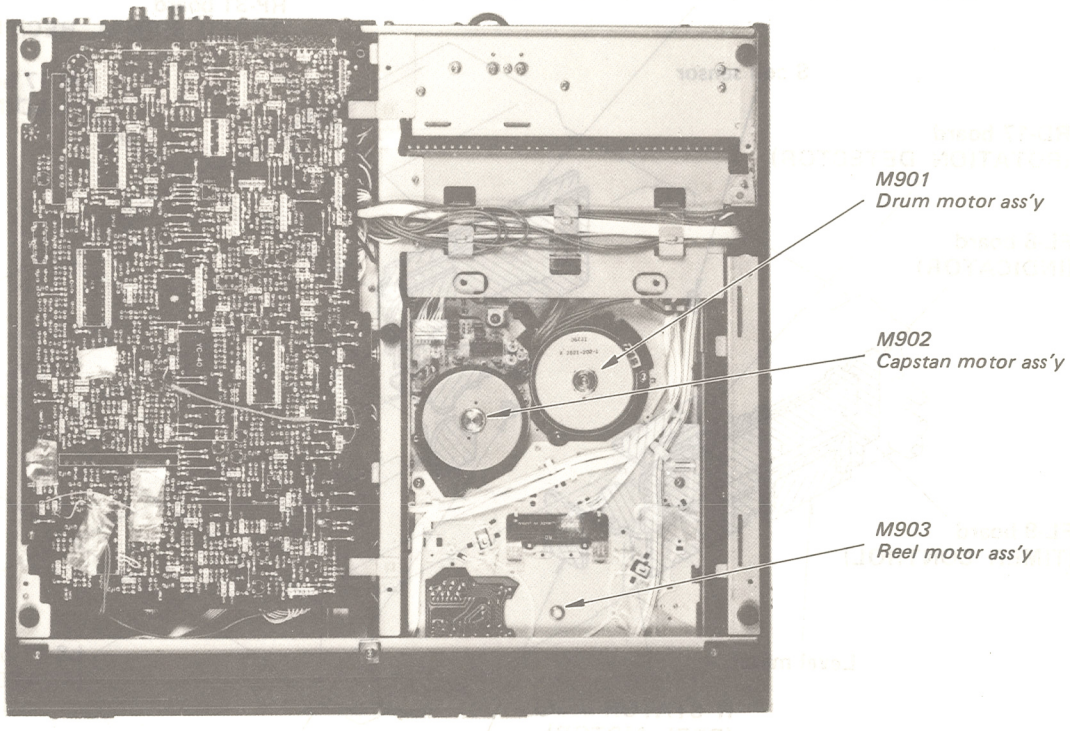

SECTION 3
DIAGRAMS

3-1. CIRCUIT BOARDS LOCATION

※ : POWER block SR-21E

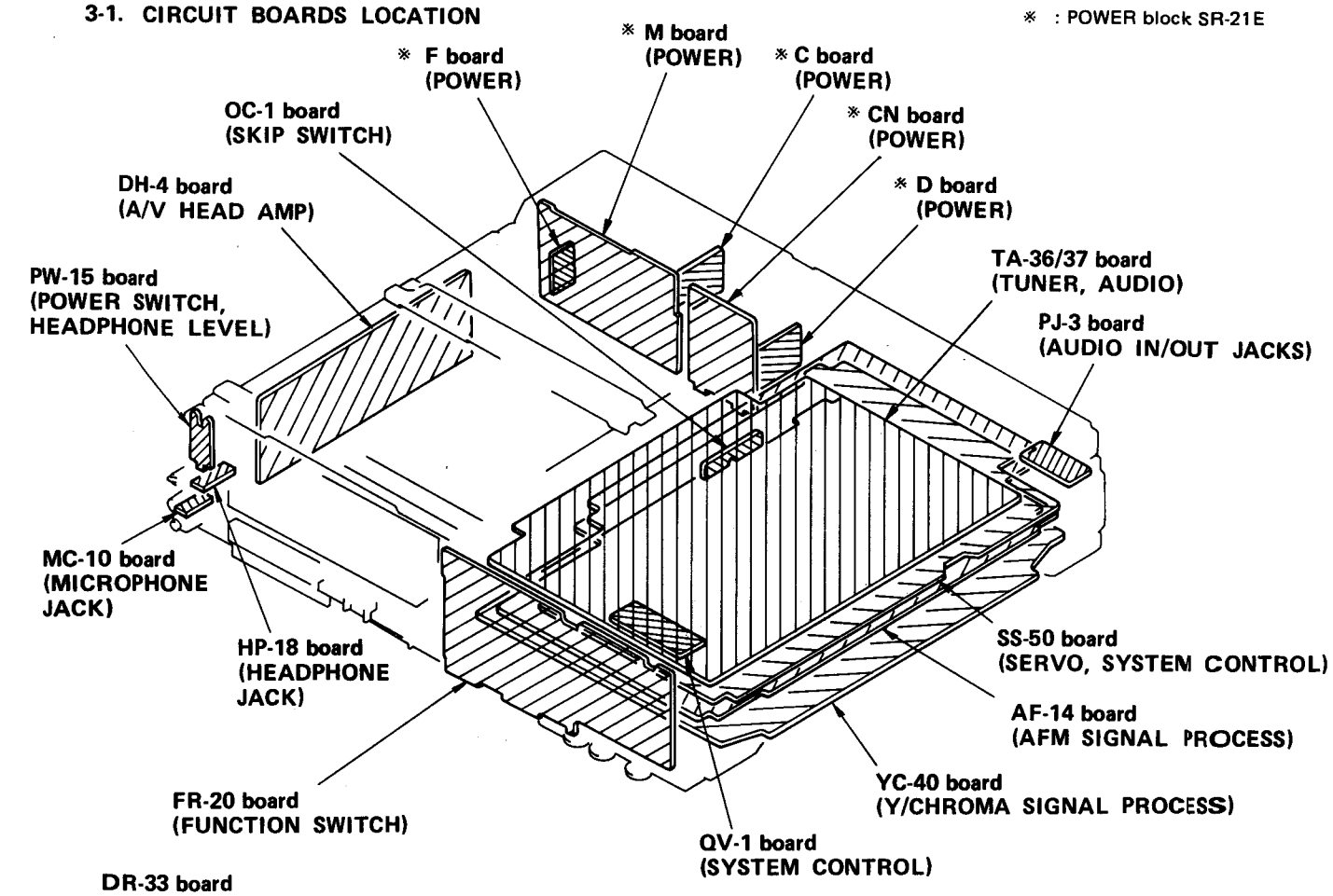

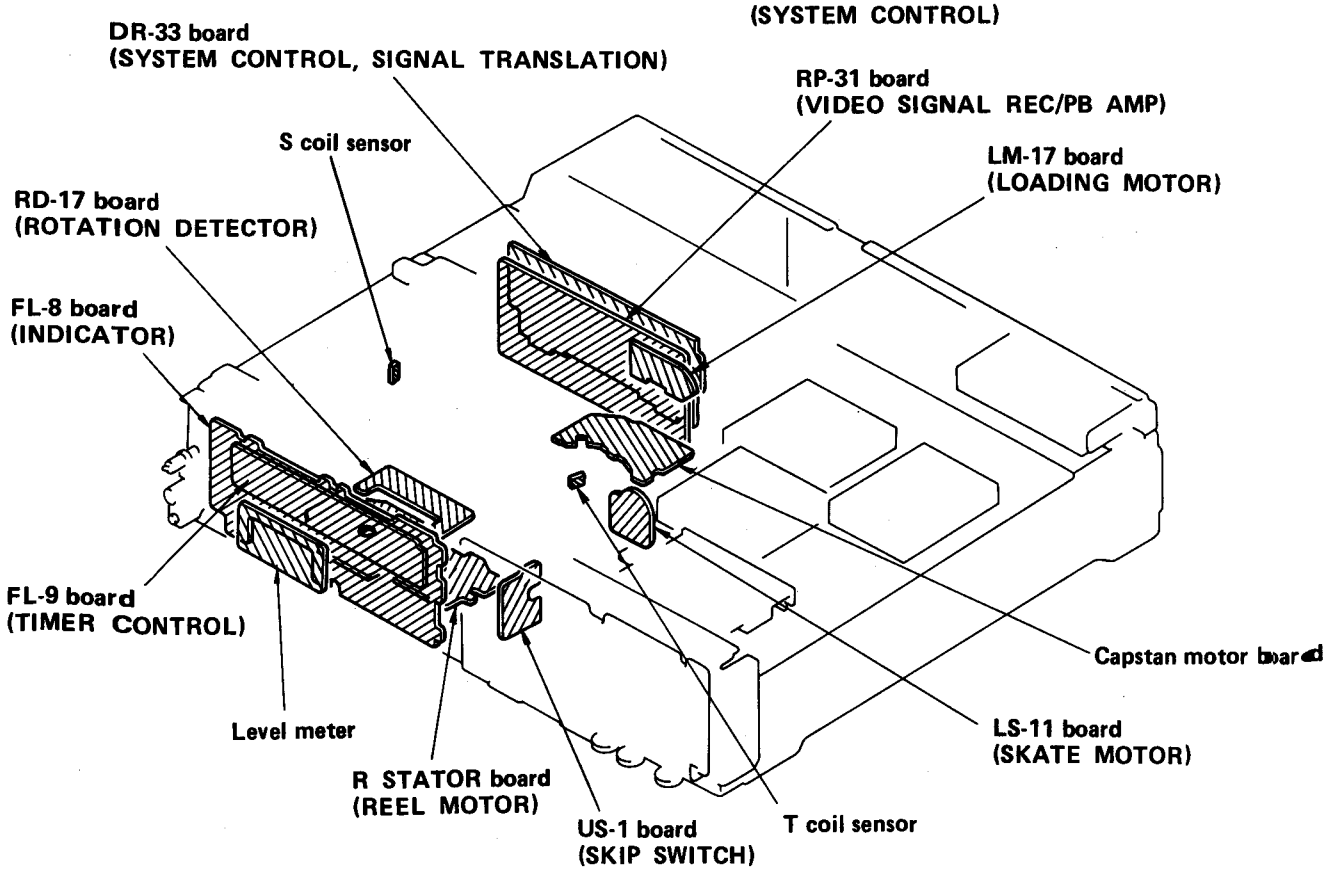

3-2. OVERALL BLOCK DIAGRAM

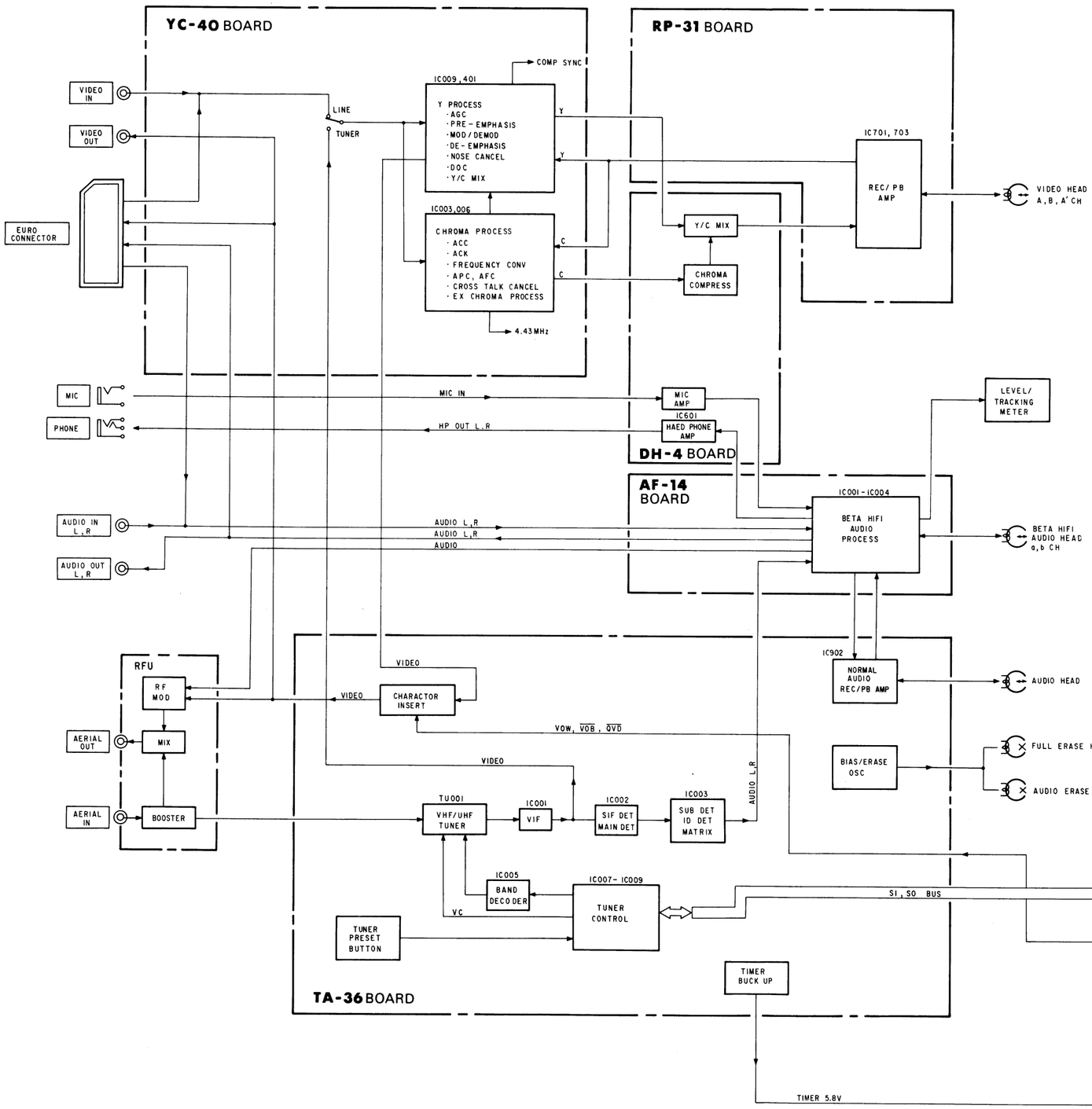

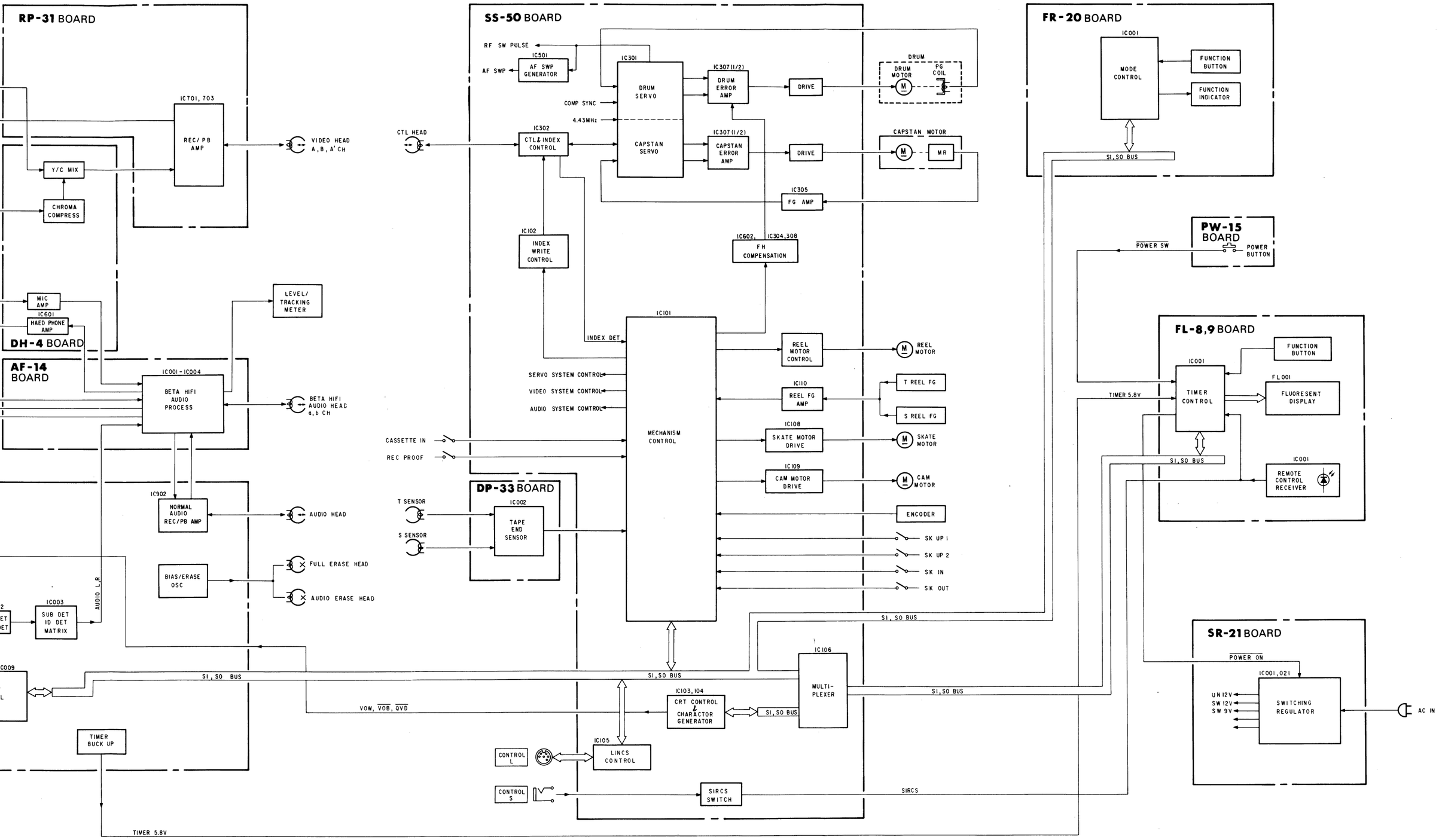
RP-31 BOARD
IC701, 703
REC/PB AMP
VIDEO HEAD A,B,A' CH
Y/C MIX
CHROMA COMPRESS
MIC AMP
IC601
HAED PHONE AMP
DH-4 BOARD
LEVEL/ TRACKING METER
AF-14 BOARD
IC001 - IC004
BETA HIFI AUDIO PROCESS
BETA HIFI AUDIO HEAD a,b CH
IC902
NORMAL AUDIO REC/PB AMP
AUDIO HEAD
BIAS/ERASE OSC
FULL ERASE HEAD
AUDIO ERASE HEAD
AUDIO L,R
IC003
SUB DET ID DET MATRIX
TIMER BUCK UP
TIMER 5.8V
SS-50 BOARD
RF SW PULSE
IC501
AF SWP
AF SWP GENERATOR
IC301
DRUM SERVO
CAPSTAN SERVO
COMP SYNC
4.43MHz
IC307(1/2)
DRUM ERROR AMP
CAPSTAN ERROR AMP
DRIVE
DRUM
DRUM MOTOR
PG COIL
CAPSTAN MOTOR
MR
CTL HEAD
IC302
CTL & INDEX CONTROL
IC305
FG AMP
IC102
INDEX WRITE CONTROL
IC602, IC304,308
FH COMPENSATION
IC101
INDEX DET
MECHANISM CONTROL
REEL MOTOR CONTROL
REEL MOTOR
SERVO SYSTEM CONTROL
VIDEO SYSTEM CONTROL
AUDIO SYSTEM COMTROL
IC110
REEL FG AMP
T REEL FG
S REEL FG
CASSETTE IN
REC PROOF
IC108
SKATE MOTOR DRIVE
SKATE MOTOR
IC109
CAM MOTOR DRIVE
CAM MOTOR
ENCODER
SK UP 1
SK UP 2
SK IN
SK OUT
DP-33 BOARD
T SENSOR
S SENSOR
IC002
TAPE END SENSOR
SI, SO BUS
IC106
MULTI-PLEXER
IC103, 104
CRT CONTROL & CHARACTOR GENERATOR
VOW, VOB, QVD
IC105
LINCS CONTROL
CONTROL L
CONTROL S
SIRCS SWITCH
SIRCS
FR-20 BOARD
IC001
MODE CONTROL
FUNCTION BUTTON
FUNCTION INDICATOR
SI,SO BUS
PW-15 BOARD
POWER SW
POWER BUTTON
FL-8,9 BOARD
FUNCTION BUTTON
IC001
TIMER CONTROL
FL001
FLUORESENT DISPLAY
TIMER 5.8V
SI,SO BUS
IC001
REMOTE CONTROL RECEIVER
SR-21 BOARD
POWER ON
IC001,021
SWITCHING REGULATOR
UN 12V
SW 12V
SW 9V
AC IN

3-3. VIDEO BLOCK DIAGRAM

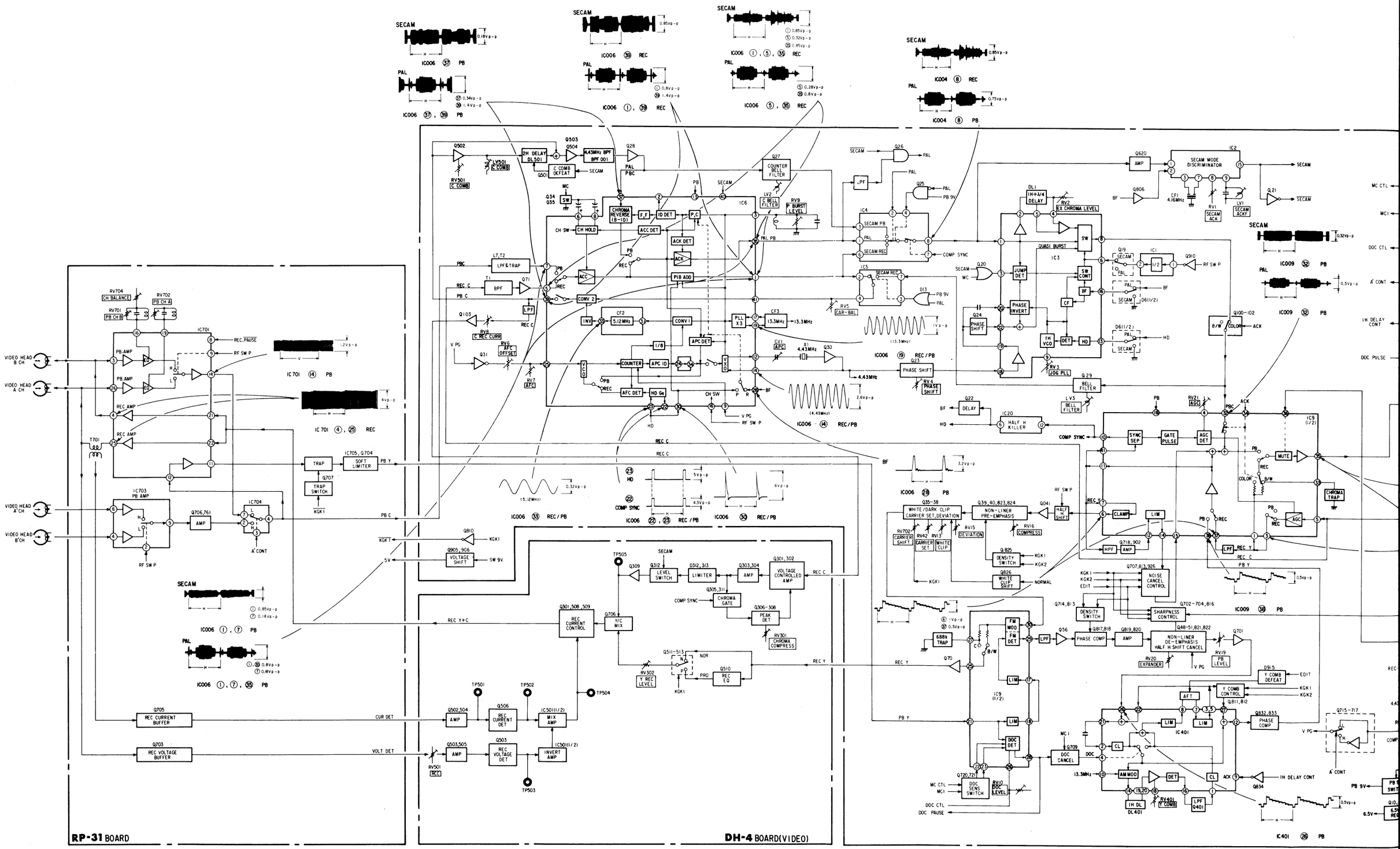

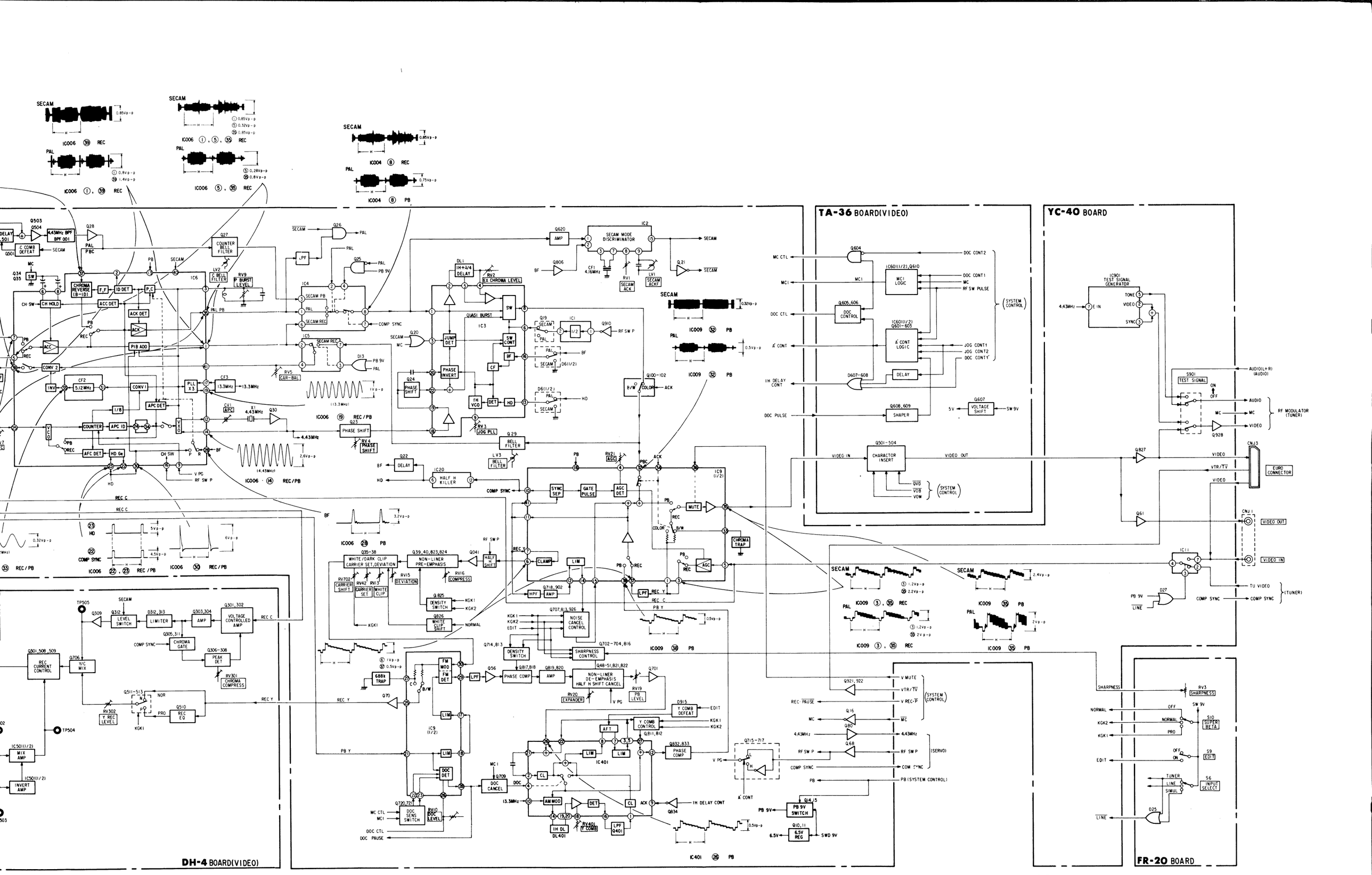
TA-36 BOARD(VIDEO)
YC-40 BOARD
DH-4 BOARD(VIDEO)
FR-20 BOARD
SECAM
PAL
REC
PB
IC006 ① , ⑤ , ㉟ REC
IC006 ㉓ HD
IC006 ㉒ COMP SYNC
IC006 ㉓ , ㉒ REC / PB
IC006 ㉖ REC / PB
IC006 ⑭ REC/PB
IC004 ⑧ REC
IC004 ⑧ PB
IC009 ㉜ PB
IC009 ③ , ㉟ REC
IC009 ㉟ PB
IC009 ㊳ PB
IC401 ㉕ PB
SECAM MODE DISCRIMINATOR
COUNTER BELL FILTER
C BELL FILTER
CHROMA REVERSE (B-ID)
ID DET
ACC DET
ACK DET
ACC
PIB ADD
CONV 2
CONV 1
PLL X3
APC DET
COUNTER
APC ID
AFC DET
HD Ge
VCO
1/8
PHASE SHIFT
CHROMA GATE
PEAK DET
LEVEL SWITCH
LIMITER
VOLTAGE CONTROLLED AMP
REC CURRENT CONTROL
Y/C MIX
MIX AMP
INVERT AMP
WHITE/DARK CLIP CARRIER SET/DEVIATION
NON-LINER PRE-EMPHASIS
HALF H SHIFT
DENSITY SWITCH
WHITE CLIP SHIFT
NOISE CANCEL CONTROL
SHARPNESS CONTROL
NON-LINER DE-EMPHASIS HALF H SHIFT CANCEL
PHASE COMP
FM MOD
FM DET
688k TRAP
DOC CANCEL
DOC SENS SWITCH
DOC DET
Y COMB CONTROL
AFT
AM MOD
GATE PULSE
SYNC SEP
AGC DET
HALF H KILLER
JUMP DET
PHASE INVERT
QUASI BURST
IH VCO
IH DELAY
SW CONT
CHROMA TRAP
MUTE
CLAMP
LIM
HPF
LPF
NOR
PRO
REC EQ
Y REC LEVEL
CHARACTOR INSERT
DOC CONTROL
A' CONT LOGIC
MC/I LOGIC
SHAPER
VOLTAGE SHIFT
DELAY
PB 9V SWITCH
6.5V REG
TEST SIGNAL GENERATOR
EURO CONNECTOR
RF MODULATOR (TUNER)
SUPER BETA
EDIT
INPUT SELECT
SYSTEM CONTROL
SERVO
TUNER
DOC CONT2
DOC CONT1
MC
RF SW PULSE
JOG CONT1
JOG CONT2
DOC CONT'
AUDIO(L+R) (AUDIO)
VIDEO IN
VIDEO OUT
COMP SYNC
PB (SYSTEM CONTROL)
V MUTE
VTR/TV
V REC-P
4.43MHz
RF SW P
SHARPNESS
REC PAUSE
A' CONT
IH DELAY CONT
SW 9V
PB 9V
6.5V
REC C
REC Y
PB Y
PAL PB
PAL PBC
SECAM PB
SECAM REC
COMP SYNC
CHROMA COMPRESS
Y REC LEVEL
CAR-BAL
EX CHROMA LEVEL
SECAM ACK
SECAM ACKF
JOG PLL
BELL FILTER
PHASE SHIFT
CARRIER SHIFT
CARRIER SET
WHITE CLIP
DEVIATION
COMPRESS
Y COMB DEFAET
EXPANDER
PB LEVEL
DOC LEVEL
Y COMB
CF1 4.16MHz
CF2 5.12MHz
CF3 13.3MHz
X1 4.43MHz
DL1 1H+1/4 DELAY
DL401 1H DL
Q401 LPF
RV1 SECAM ACK
RV2 EX CHROMA LEVEL
RV3 JOG PLL
RV4 PHASE SHIFT
RV5 CAR-BAL
RV9 P BURST LEVEL
RV10 DOC LEVEL
RV15 DEVIATION
RV16 COMPRESS
RV20 EXPANDER
RV21 AGC
RV301 CHROMA COMPRESS
RV302 Y REC LEVEL
RV401 Y COMB
RV702 CARRIER SHIFT
RV42 CARRIER SET
RV43 WHITE CLIP
RV19 PB LEVEL
RV3 SHARPNESS
S901 TEST SIGNAL
S9 EDIT
S10 SUPER BETA
S6 INPUT SELECT
CNJ1
CNJ3
TP504
TP505

3-4. SERVO BLOCK DIAGRAM

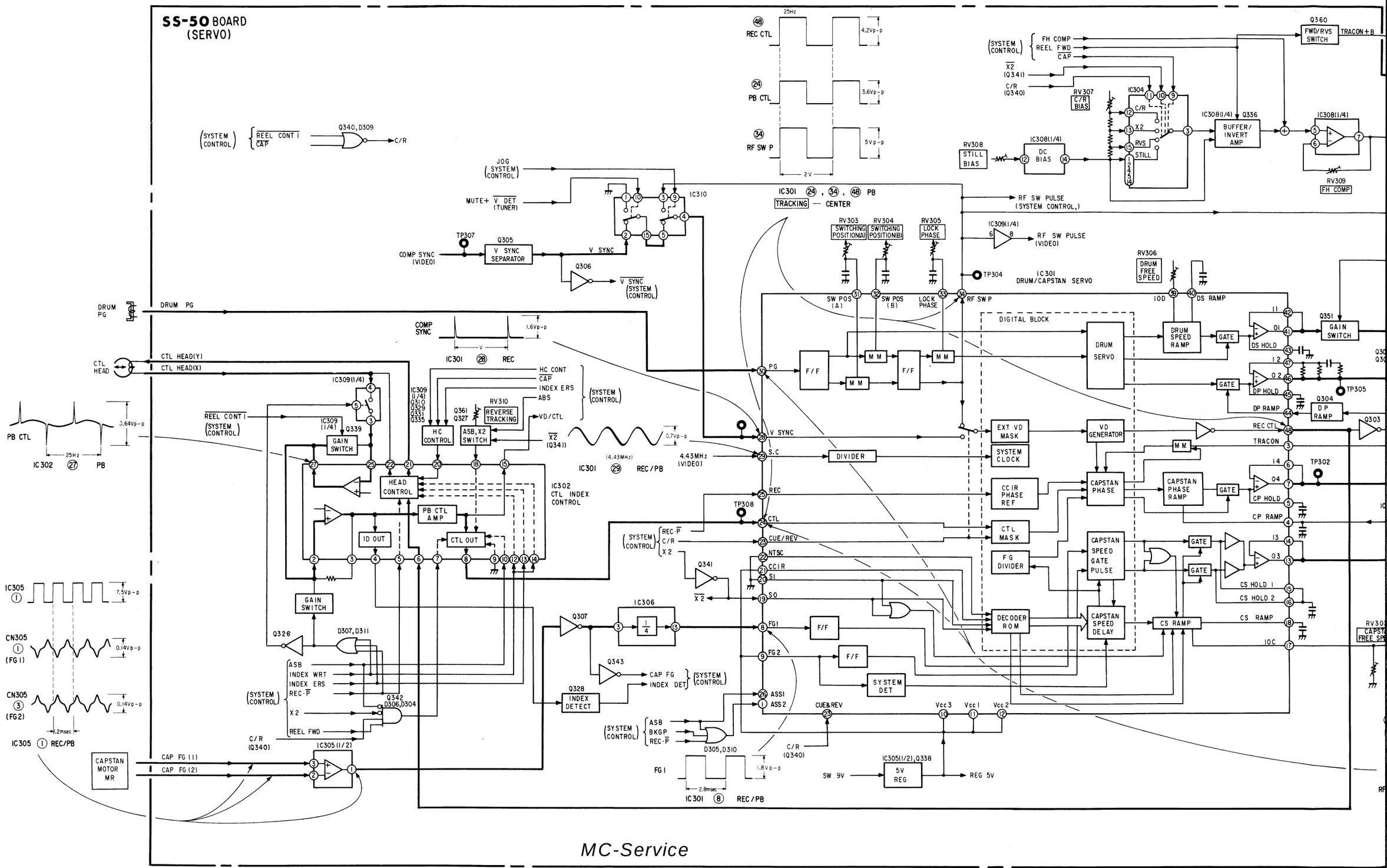

MC-Service

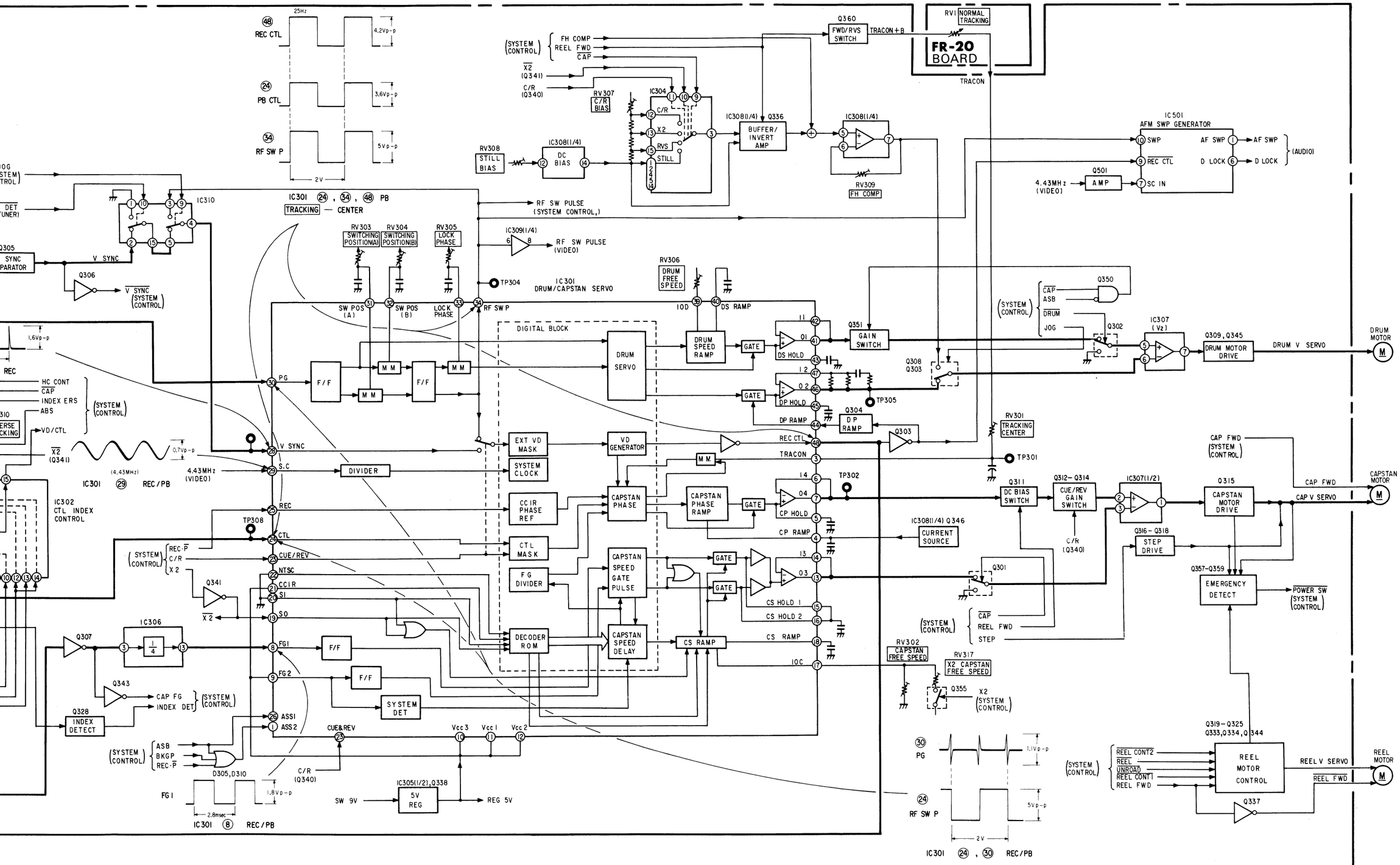
FR-20 BOARD
RV1 NORMAL TRACKING
TRACON
Q360 FWD/RVS SWITCH
TRACON+B
(SYSTEM CONTROL) FH COMP REEL FWD CAP
X2 (Q341)
C/R (Q340)
RV307 C/R BIAS
IC304
IC308(1/4) Q336 BUFFER/INVERT AMP
IC308(1/4)
RV309 FH COMP
RV308 STILL BIAS
IC308(1/4) DC BIAS
IC501 AFM SWP GENERATOR
SWP
REC CTL
SC IN
AF SWP
D LOCK
(AUDIO)
Q501 AMP
4.43MHz (VIDEO)
IC301 (24), (34), (48) PB TRACKING — CENTER
RF SW PULSE (SYSTEM CONTROL,)
IC309(1/4)
RF SW PULSE (VIDEO)
RV303 SWITCHING POSITION(A)
RV304 SWITCHING POSITION(B)
RV305 LOCK PHASE
TP304
IC301 DRUM/CAPSTAN SERVO
RV306 DRUM FREE SPEED
IOD
DS RAMP
SW POS (A)
SW POS (B)
LOCK PHASE
RF SW P
DIGITAL BLOCK
DRUM SERVO
DRUM SPEED RAMP
GATE
DS HOLD
DP HOLD
DP RAMP
Q351 GAIN SWITCH
Q308 Q303
Q350
CAP
ASB
DRUM
JOG
Q302
IC307 (V2)
Q309, Q345 DRUM MOTOR DRIVE
DRUM V SERVO
DRUM MOTOR
TP305
Q304 DP RAMP
Q303
RV301 TRACKING CENTER
TP301
TP302
EXT VD MASK
SYSTEM CLOCK
VD GENERATOR
CCIR PHASE REF
CAPSTAN PHASE
CAPSTAN PHASE RAMP
CTL MASK
FG DIVIDER
CAPSTAN SPEED GATE PULSE
DECODER ROM
CAPSTAN SPEED DELAY
CS RAMP
CP HOLD
CP RAMP
CS HOLD 1
CS HOLD 2
IOC
DIVIDER
PG
F/F
M M
V SYNC
S.C
REC
CTL
CUE/REV
NTSC
CCIR
SI
SO
FG1
FG2
ASS1
ASS2
CUE&REV
Vcc3
Vcc1
Vcc2
SYSTEM DET
IC305(1/2), Q338 5V REG
SW 9V
REG 5V
IC301 (8) REC/PB
IC301 (29) REC/PB
IC302 CTL INDEX CONTROL
IC306
Q307
Q343
CAP FG
INDEX DET
Q328 INDEX DETECT
D305, D310
FG1
IC301 (24), (30) REC/PB
IC308(1/4) Q346 CURRENT SOURCE
Q301
Q311 DC BIAS SWITCH
Q312–Q314 CUE/REV GAIN SWITCH
IC307(1/2)
Q315 CAPSTAN MOTOR DRIVE
CAP FWD
CAP V SERVO
CAPSTAN MOTOR
Q316–Q318 STEP DRIVE
Q357–Q359 EMERGENCY DETECT
POWER SW (SYSTEM CONTROL)
CAP FWD (SYSTEM CONTROL)
RV302 CAPSTAN FREE SPEED
RV317 X2 CAPSTAN FREE SPEED
Q355
X2 (SYSTEM CONTROL)
Q319–Q325 Q333, Q334, Q344
REEL MOTOR CONTROL
REEL CONT2
REEL
UNROAD
REEL CONT1
REEL FWD
REEL V SERVO
REEL FWD
REEL MOTOR
Q337
IC301 (24), (30) REC/PB

3-5. SYSTEM CONTROL BLOCK DIAGRAM

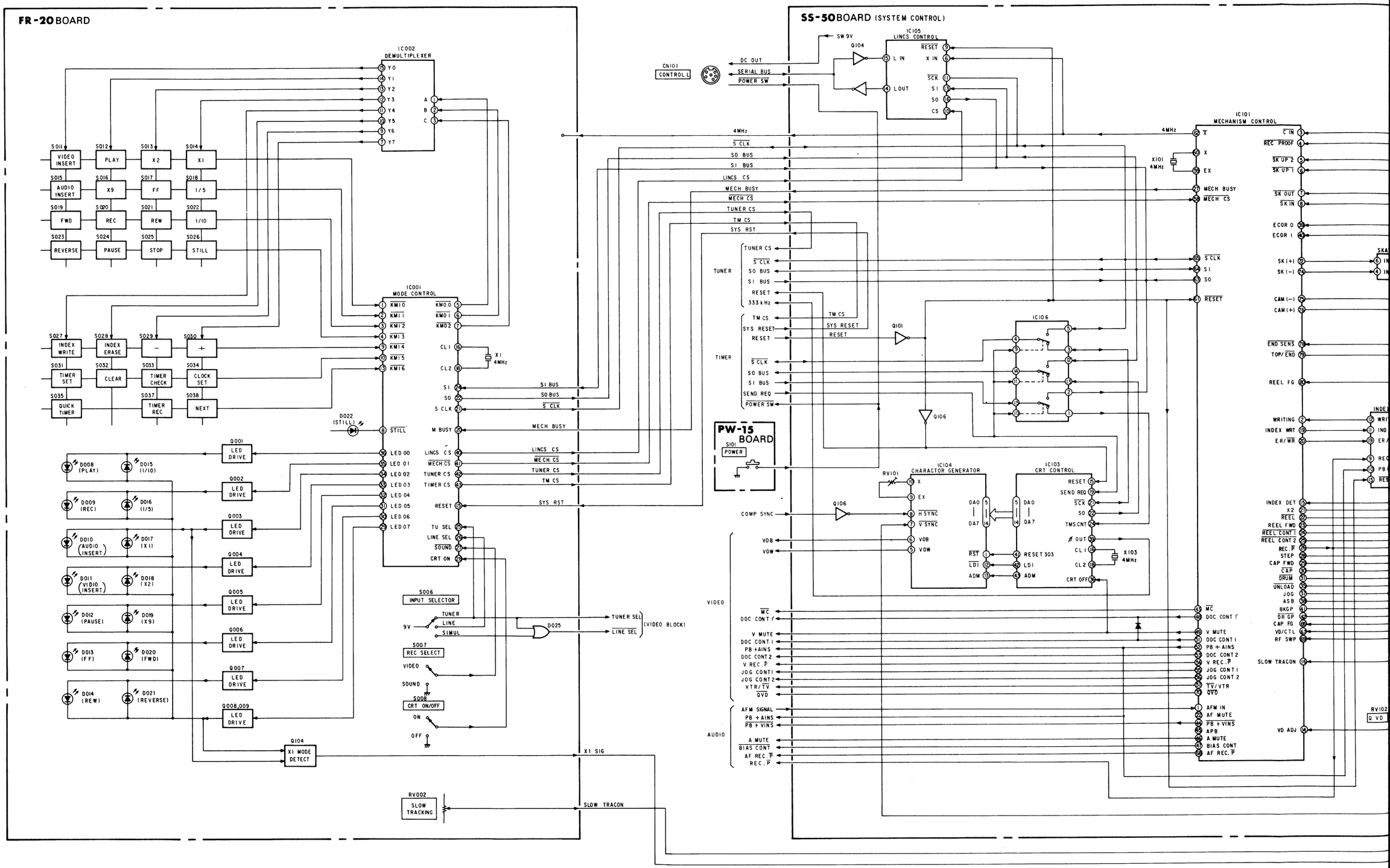

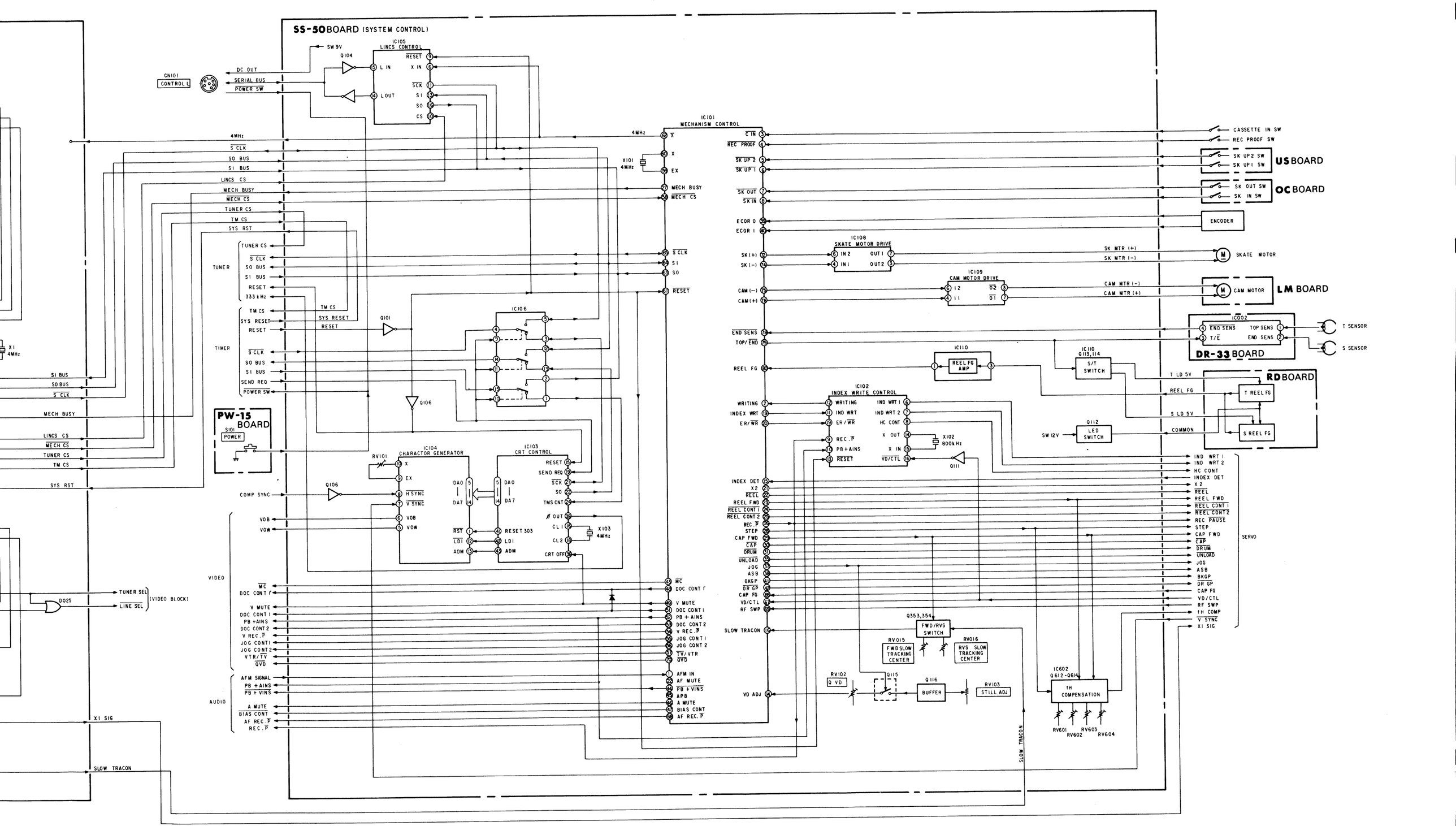
SS-50 BOARD (SYSTEM CONTROL)
IC105 LINCS CONTROL
Q104
SW 9V
CN101 CONTROL L
DC OUT
SERIAL BUS
POWER SW
L IN
L OUT
RESET
X IN
SCK
SI
SO
CS
IC101 MECHANISM CONTROL
4MHz
X101 4MHz
MECH BUSY
MECH CS
TUNER CS
TM CS
SYS RST
S CLK
SO BUS
SI BUS
TUNER
RESET
333 kHz
TIMER
SYS RESET
SEND REQ
POWER SW
Q101
Q106
IC106
PW-15 BOARD
S101 POWER
IC104 CHARACTOR GENERATOR
IC103 CRT CONTROL
RV101
COMP SYNC
VOB
VOW
H SYNC
V SYNC
DA0
DA7
RESET 303
LDI
ADM
SCK
SO
TMS CNT
CRT OFF
X103 4MHz
CL1
CL2
VIDEO
AUDIO
MC
DOC CONT 1'
V MUTE
DOC CONT 1
PB + AINS
DOC CONT 2
V REC. P
JOG CONT 1
JOG CONT 2
VTR/TV
QVD
AFM SIGNAL
AFM IN
AF MUTE
PB + VINS
APB
A MUTE
BIAS CONT
AF REC. P
REC. P
D025
TUNER SEL
LINE SEL
(VIDEO BLOCK)
X1 SIG
SLOW TRACON
C IN
REC PROOF
SK UP 2
SK UP 1
SK OUT
SK IN
ECOR 0
ECOR 1
SK (+)
SK (-)
CAM (-)
CAM (+)
END SENS
TOP/END
REEL FG
IC108 SKATE MOTOR DRIVE
IC109 CAM MOTOR DRIVE
IC110
REEL FG AMP
IC102 INDEX WRITE CONTROL
WRITING
INDEX WRT
ER/WR
REC. P
PB + AINS
RESET
X OUT
X IN
VD/CTL
X102 800k Hz
Q111
INDEX DET
X2
REEL
REEL FWD
REEL CONT 1
REEL CONT 2
STEP
CAP FWD
CAP
DRUM
UNLOAD
JOG
ASB
BKGP
DR GP
CAP FG
RF SWP
SLOW TRACON
Q353,354
FWD/RVS SWITCH
RV015
FWD SLOW TRACKING CENTER
RV016
RVS SLOW TRACKING CENTER
RV102
Q VD
Q115
Q116
BUFFER
RV103
STILL ADJ
VD ADJ
IC110 Q113,114
S/T SWITCH
Q112
LED SWITCH
SW 12V
IC602 Q612-0614
1H COMPENSATION
RV601
RV602
RV603
RV604
CASSETTE IN SW
REC PROOF SW
SK UP 2 SW
SK UP 1 SW
US BOARD
SK OUT SW
SK IN SW
OC BOARD
ENCODER
SK MTR (+)
SK MTR (-)
SKATE MOTOR
CAM MTR (-)
CAM MTR (+)
CAM MOTOR
LM BOARD
IC002
END SENS
TOP SENS
T/E
DR-33 BOARD
T SENSOR
S SENSOR
RD BOARD
T LD 5V
T REEL FG
S LD 5V
COMMON
S REEL FG
IND WRT 1
IND WRT 2
HC CONT
SERVO

3-6. SYSTEM CONTROL INTERFACE

[SYSTEM CONTROL – VIDEO BLOCK INTERFACE]

MODE / SIGNAL	I/O	PIN No.	STOP	FF	REW	PICTURE SERCH		FR SERCH		PB	PB·P	REC	REC·P	FRAME	–FRAME	MODE JOG								A-IN
						CUE	REV	CUE	REV							×⅕,⅒	×1	×2	×9	×–⅕,–⅒	×1	×2	×9	
REC $\overline{P}$	O	IC101-㉖	L	L	L	L	L	L	L	L	L	H	L	L	L	L	L	L	L	L	L	L	L	L
$\overline{MC}$	O	IC101-㊸	H	H	H	L	L	L	L	H	L	H	H	L	L	L	L	L	L	L	L	L	L	H
$\overline{PB+V\ INS}$	O	IC101-㊹	H	H	H	L	L	L	L	L	L	H	H	L	L	L	L	L	L	L	L	L	L	H
V MUTE	O	IC101-㊾	L	L	L	L	L	L	L	L※1	L	L	L	L	L	L	H	H	L	L	H	H	L	H
DOC CONT 1	O	IC101-㊶	H	H	H	L	L	L	L	H	H	H	H	H	H	H	H	H	L	Pulse	L	L	L	H
PB+A INS	O	IC101-㊷	L	L	L	H	H	H	H	H	H	L	L	H	H	H	H	H	H	H	H	H	H	H
DOC CONT 2	O	IC101-㊸	L	L	L	L	L	L	L	L	L	H	L	Pulse	Pulse	Pulse	H	Pulse	L	Pulse	L	L	L	H
V REC $\overline{P}$	O	IC101-㊹	L	L	L	L	L	L	L	L	L	L	L	L	L	L	L	L	L	L	L	L	L	L
JOG CNT 1	O	IC101-㊺	H	H	H	L	L	L	L	H	Pulse	H	H	Pulse	Pulse	H	H	H	L	H	L	L	L	H
JOG CNT 2	O	IC101-㊻	H	L	L	H	H	H	H	H	L	H	H	L	L	L	H	L	H	L	L	L	H	H

[SYSTEM CONTROL – AUDIO BLOCK INTERFACE]

MODE / SIGNAL	I/O	PIN No.	STOP	FF	REW	PICTURE SERCH		FR SERCH		PB	PB·P	REC	REC·P	FRAME	–FRAME	JOG								A-IN
						CUE	REV	CUE	REV							×⅕,⅒	×1	×2	×9	×–⅕,–⅒	×–1	×–2	×–9	
A MUTE	O	IC101-㊻	L	L	L	H	H	H	H	L※1	H	L	L	H	H	H	H	H	H	H	H	H	H	L
$\overline{BIAS\ CONT}$	O	IC101-㊼	H	H	H	H	H	H	H	H	H	L	H	H	H	H	H	H	H	H	H	H	H	L
AF REC $\overline{P}$	O	IC101-㊽	L	L	L	L	L	L	L	L	L	H	L	L	L	L	L	L	L	L	L	L	L	H

[SYSTEM CONTROL – REEL MOTOR BLOCK INTERFACE]

MODE / SIGNAL	I/O	PIN No.	STOP	FF	REW	PICTURE SERCH		FR SERCH		PB	PB·P	REC	REC·P	FRAME	–FRAME	JOG								A-IN
						CUE	REV	CUE	REV							×⅕,⅒	×1	×2	×9	×–⅕,–⅒	×–1	×–2	×–9	
$\overline{REEL}$	O	IC101-㉒	H	L	L	L	L	L	L	L	L	L	H	L	L	L	L	L	L	L	L	L	L	L
REEL FWD	O	IC101-㉓	H	H	L	H	L	H	L	H	H	H	L	H	L	H	H	H	H	L	L	L	L	H
$\overline{REEL\ CONT\ 1}$	O	IC101-㉔	H	L	L	L	L	L	L	H	H	H	H	H	H	H	H	H	L	H	H	H	L	H
$\overline{REEL\ CONT\ 2}$	O	IC101-㉕	H	L	L	H	H	H	H	H	H	H	H	H	H	H	H	H	H	H	L	L	H	H
$\overline{UN\ LOAD}$	O	IC101-㉟	H※2	H	H	H	H	H	H	H	H	H	H	H	H	H	H	H	H	H	H	H	H	H

SERCH		PB	PB·P	REC	REC·P	FRAME	–FRAME	MODE	JOG							A-IN	A-IN·P	V-IN	V-IN·P	AV-IN	AV-IN·P
	REV							×⅕,⅒	×1	×2	×9	×−⅕,−⅒	×1	×2	×9						
	L	L	L	H	L	L	L	L	L	L	L	L	L	L	L	L	L	L	L	L	L
	L	H	L	H	H	L	L	L	L	L	L	L	L	L	L	H	L	H	H	H	H
	L	L	L	H	H	L	L	L	L	L	L	L	L	L	L	H	L	H	H	H	H
	L	L※1	L	L	L	L	L	L	H	H	L	L	H	H	L	H	L	L	L	L	L
	L	H	H	H	H	H	H	H	H	H	L	Pulse	L	L	L	H	H	H	H	H	H
	H	H	H	L	L	H	H	H	H	H	H	H	H	H	H	H	H	L	L	L	L
	L	L	L	H	L	Pulse	Pulse	Pulse	H	Pulse	L	Pulse	L	L	L	H	Pulse	H	L	H	H
	L	L	L	L	L	L	L	L	L	L	L	L	L	L	L	L	L	L	L	L	L
	L	H	Pulse	H	H	Pulse	Pulse	H	H	H	L	H	L	L	L	H	H	H	H	H	H
	H	H	L	H	H	L	L	L	H	L	H	L	L	L	H	H	L	H	H	H	H

SERCH		PB	PB·P	REC	REC·P	FRAME	–FRAME	JOG								A-IN	A-IN·P	V-IN	V-IN·P	AV-IN	AV-IN·P
	REV							×⅕,⅒	×1	×2	×9	×−⅕,−⅒	×−1	×−2	×−9						
	H	L※1	H	L	L	H	H	H	H	H	H	H	H	H	H	L	L	L	H	L	L
	H	H	H	L	H	H	H	H	H	H	H	H	H	H	H	L	L	L	L	L	L
	L	L	L	H	L	L	L	L	L	L	L	L	L	L	L	H	L	H	L	H	L

※1 "H" when there is no CTL.

SERCH		PB	PB·P	REC	REC·P	FRAME	–FRAME	JOG								A-IN	A-IN·P	V-IN	V-IN·P	AV-IN	AV-IN·P
	REV							×⅕,⅒	×1	×2	×9	×−⅕,−⅒	×−1	×−2	×−9						
	L	L	L	L	H	L	L	L	L	L	L	L	L	L	L	L	L	L	L	L	L
	L	H	H	H	L	H	L	H	H	H	H	L	L	L	L	H	H	H	H	H	H
	L	H	H	H	H	H	H	H	H	H	L	H	H	H	L	H	H	H	H	H	H
	H	H	H	H	H	H	H	H	H	H	H	H	L	L	H	H	H	H	H	H	H
	H	H	H	H	H	H	H	H	H	H	H	H	H	H	H	H	H	H	H	H	H

※2 "L" for EJECT.

[SYSTEM CONTROL – MECHANISM BLOCK INTERFACE]

MODE / SIGNAL	I/O	PIN No.	STOP	FF	REW	PICTURE SERCH CUE	PICTURE SERCH REV	FR SERCH CUE	FR SERCH REV	PB	PB·P	REC	REC·P	FRAME	-FRAME	JOG ×1/5, 1/10	JOG ×1	JOG ×2	JOG ×9	JOG ×−1/5, −1/10	JOG ×−1	JOG ×−2	JOG ×−9	A-IN
$\overline{\text{C IN}}$	I	IC101-③	L※1	L	L	L	L	L	L	L	L	L	L	L	L	L	L	L	L	L	L	L	L	L
$\overline{\text{REC PRF}}$	I	IC101-④	※2	※2	※2	※2	※2	※2	※2	※2	※	L	L	※3	※3	※3	※3	※3	※3	※3	※3	※3	※3	※3
$\overline{\text{SK UP 2}}$	I	IC101-⑤	H	H	H	H	H	H	H	H	H	H	H	H	H	H	H	H	H	H	H	H	H	H
$\overline{\text{SK UP 1}}$	I	IC101-⑥	H	H	H	H	H	H	H	H	H	H	H	H	H	H	H	H	H	H	H	H	H	H
$\overline{\text{SK OUT}}$	I	IC101-⑦	※3	※3	※3	※3	※3	※3	※3	※3	※3	※3	※3	※3	※3	※3	※3	※3	※3	※3	※3	※3	※3	※3
$\overline{\text{SK IN}}$	I	IC101-⑧	※4	※4	※4	※4	※4	※4	※4	※4	※4	※4	※4	※4	※4	※4	※4	※4	※4	※4	※4	※4	※4	※4
TV/$\overline{\text{VTR}}$	O	IC101-⑰	※5	※5	※5	※5	※5	※5	※5	※5	※5	※5	※5	※5	※5	※5	※5	※5	※5	※5	※5	※5	※5	※5
SK (+)	O	IC101-⑫	※6	※6	※6	※6	※6	※6	※6	※6	※6	※6	※6	※6	※6	※6	※6	※6	※6	※6	※6	※6	※6	※6
SK (−)	O	IC101-⑭	※7	※7	※7	※7	※7	※7	※7	※7	※7	※7	※7	※7	※7	※7	※7	※7	※7	※7	※7	※7	※7	※7
CAM (−)	O	IC101-⑮	H※8	H	H	H	H	H	H	H	H	H	H	H	H	H	H	H	H	H	H	H	H	H
CAM (+)	O	IC101-⑯	H※9	H	H	H	H	H	H	H	H	H	H	H	H	H	H	H	H	H	H	H	H	H
$\overline{\text{END SENS}}$	O	IC101-⑱	H	H	H	H	H	H	H	H	H	H	H	H	H	H	H	H	H	H	H	H	H	H
TOP/$\overline{\text{END}}$	O	IC101-⑲	L	L	H	L	H	L	H	L	L	L	L	L	H	L	L	L	L	H	H	H	H	L

[SYSTEM CONTROL – SERVO BLOCK INTERFACE]

MODE / SIGNAL	I/O	PIN No.	STOP	FF	REW	PICTURE SERCH CUE	PICTURE SERCH REV	FR SERCH CUE	FR SERCH REV	PB	PB·P	REC	REC·P	FRAME	–FRAME	JOG ×1/5, 1/10	JOG ×1	JOG ×2	JOG ×9	JOG ×−1/5, −1/10	JOG ×−1	JOG ×−2	JOG ×−9	A-IN
X2	O	IC101-㉑	L	L	L	L	L	L	L	L	L	L	L	L	L	L	L	H	L	L	L	L	L	L
CAP FWD	O	IC101-㉙	H	H	L	H	L	H	L	H	H	H	H	H	H	Pulse	H	H	H	Pulse	L	L	L	L
$\overline{\text{CAP}}$	O	IC101-㉚	H	H	H	L	L	L	L	L	H	L	H	H	H	H	L	L	L	H	L	L	L	L
$\overline{\text{DRUM}}$	O	IC101-㉛	H	L	L	L	L	L	L	L	L	L	L	L	L	L	L	L	L	L	L	L	L	L
JOG	O	IC101-㊲	L	L	L	H	H	H	H	L	H	L	L	H	H	H	L	H	H	H	H	H	H	L
ASB	O	IC101-㊳	L	L	L	L	L	L	L	L	L	Pulse	H	L	L	L	L	L	L	L	L	L	L	L

R SERCH E	R SERCH REV	PB	PB·P	REC	REC·P	FRAME	-FRAME	JOG ×1/5,1/10	JOG ×1	JOG ×2	JOG ×9	JOG ×−1/5,−1/10	JOG ×−1	JOG ×−2	JOG ×−9	A-IN	A-IN·P	V-IN	V-IN·P	AV-IN	AV-IN·P
	L	L	L	L	L	L	L	L	L	L	L	L	L	L	L	L	L	L	L	L	L
	※2	※2	※	L	L	※3	※3	※3	※3	※3	※3	※3	※3	※3	※3	※3	※3	※3	※3	※3	※3
	H	H	H	H	H	H	H	H	H	H	H	H	H	H	H	H	H	H	H	H	H
	H	H	H	H	H	H	H	H	H	H	H	H	H	H	H	H	H	H	H	H	H
	※3	※3	※3	※3	※3	※3	※3	※3	※3	※3	※3	※3	※3	※3	※3	※3	※3	※3	※3	※3	※3
	※4	※4	※4	※4	※4	※4	※4	※4	※4	※4	※4	※4	※4	※4	※4	※4	※4	※4	※4	※4	※4
	※5	※5	※5	※5	※5	※5	※5	※5	※5	※5	※5	※5	※5	※5	※5	※5	※5	※5	※5	※5	※5
	※6	※6	※6	※6	※6	※6	※6	※6	※6	※6	※6	※6	※6	※6	※6	※6	※6	※6	※6	※6	※6
	※7	※7	※7	※7	※7	※7	※7	※7	※7	※7	※7	※7	※7	※7	※7	※7	※7	※7	※7	※7	※7
	H	H	H	H	H	H	H	H	H	H	H	H	H	H	H	H	H	H	H	H	H
	H	H	H	H	H	H	H	H	H	H	H	H	H	H	H	H	H	H	H	H	H
	H	H	H	H	H	H	H	H	H	H	H	H	H	H	H	H	H	H	H	H	H
	H	L	L	L	L	L	H	L	L	L	L	H	H	H	H	L	L	L	L	L	L

R SERCH E	R SERCH REV	PB	PB·P	REC	REC·P	FRAME	−FRAME	JOG ×1/5,1/10	JOG ×1	JOG ×2	JOG ×9	JOG ×−1/5,−1/10	JOG ×−1	JOG ×−2	JOG ×−9	A-IN	A-IN·P	V-IN	V-IN·P	AV-IN	AV-IN·P
	L	L	L	L	L	L	L	L	L	H	L	L	L	L	L	L	L	L	L	L	L
	L	H	H	H	H	H	H	Pulse	H	H	H	Pulse	L	L	L	L	H	L	H	L	H
	L	L	H	L	H	H	H	H	L	L	L	H	L	L	L	L	H	L	H	L	H
	L	L	L	L	L	L	L	L	L	L	L	L	L	L	L	L	L	L	L	L	L
	H	L	H	L	L	H	H	H	L	H	H	H	H	H	H	L	H	L	L	L	L
	L	L	L	Pulse	H	L	L	L	L	L	L	L	L	L	L	L	L	L	L	L	L

※1 "H" when there is a cassette in the cassette compartment and it is down.
※2 "L" when cassette erase prevention claw is not broken.
※3 "H" when linear skate protion is open.
※4 "H" when linear skate portion is closed.
※5 "H" for TV, "L" for VTR.
※6 "H" when linear skate portion is closed, "L" when open.
※7 "H" when linear skate portion is open, "L" when closed.
※8 "L" during threading.
※9 "L" during unthreading.

3-7. AUDIO BLOCK DIAGRAM

(1) Beta Hi-Fi Audio Block

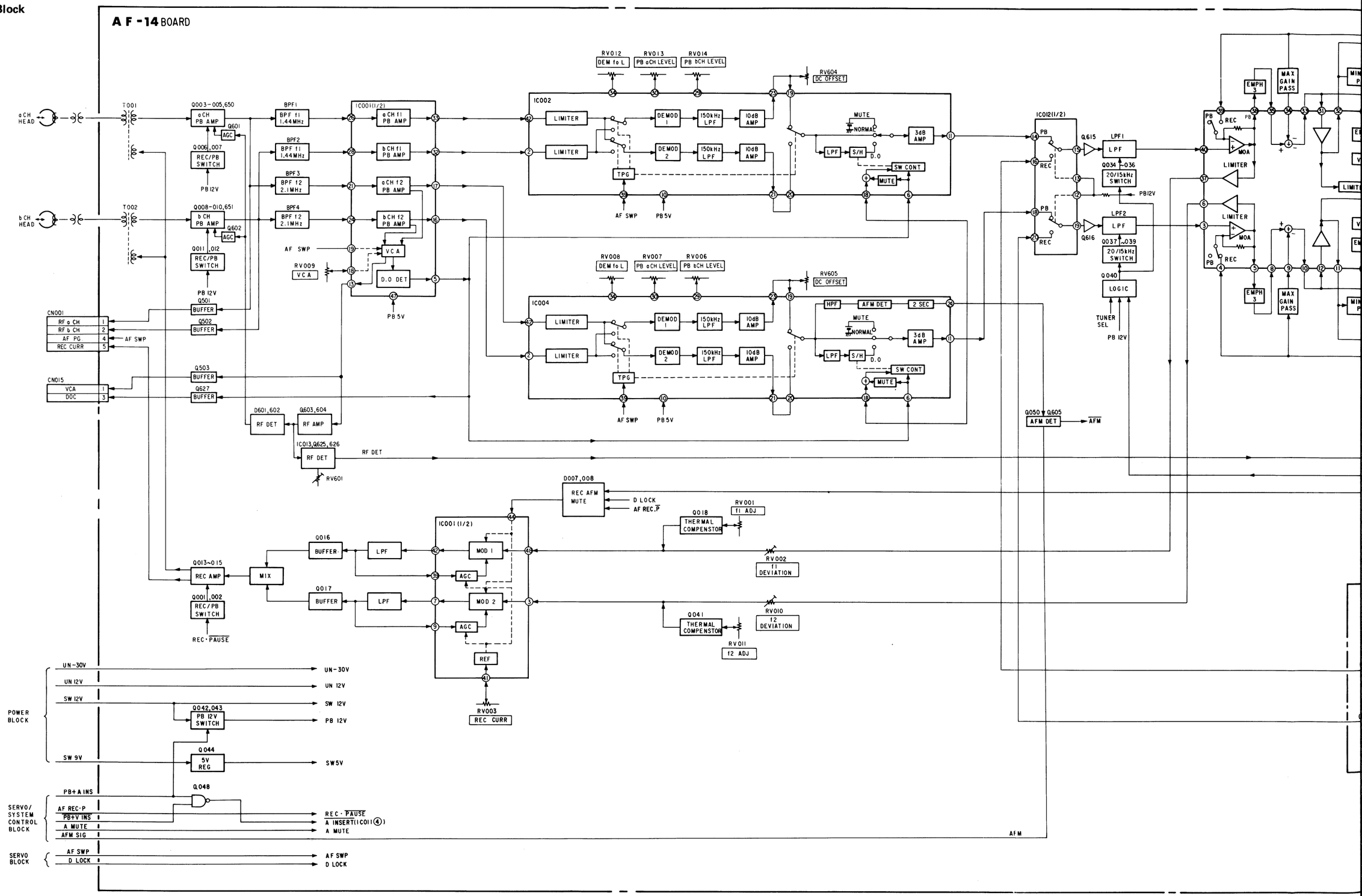

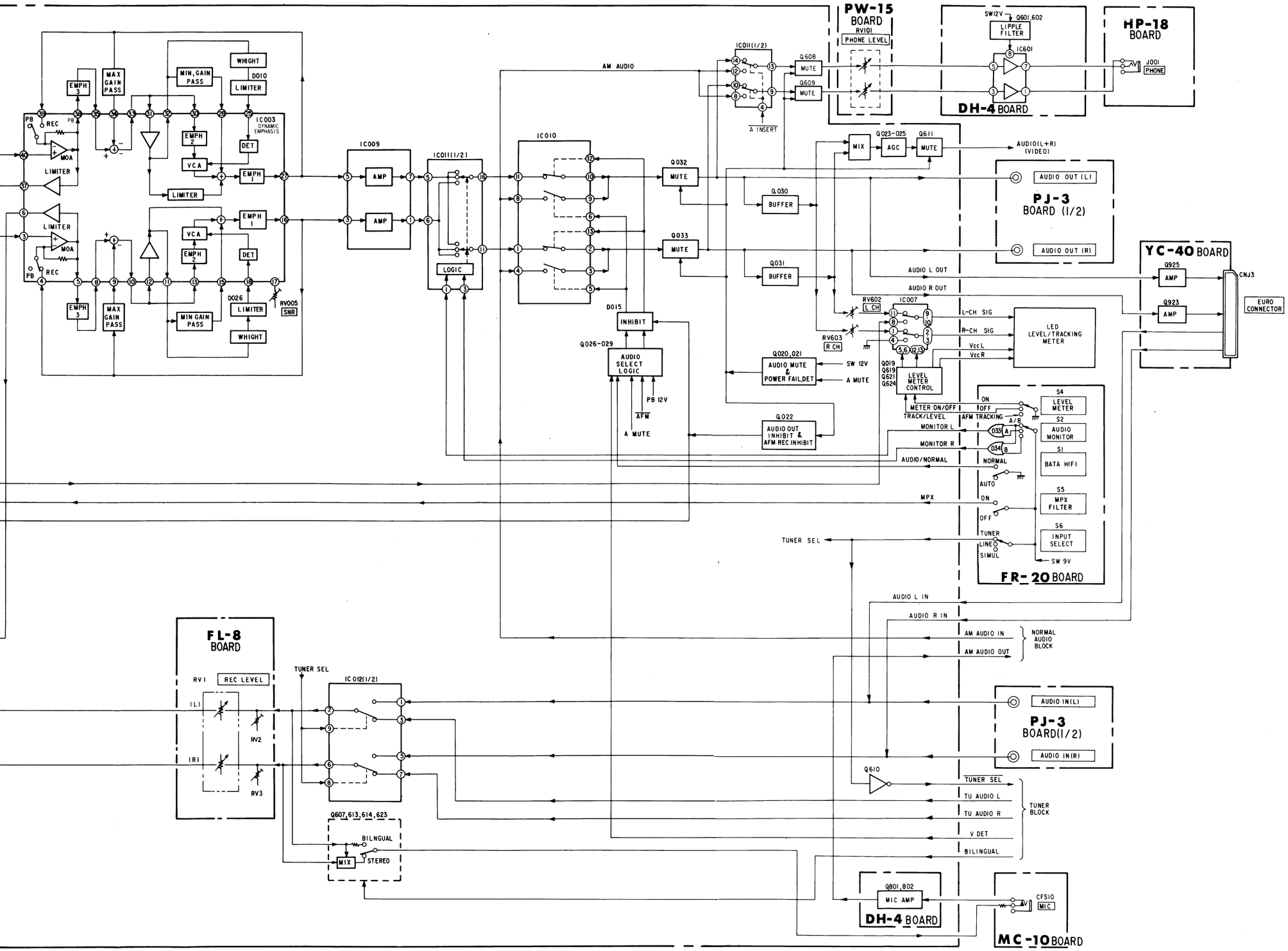
PW-15 BOARD
RV101
PHONE LEVEL
DH-4 BOARD
HP-18 BOARD
J001
PHONE
SW12V
Q601,602
RIPPLE FILTER
IC601
IC003
DYNAMIC EMPHASIS
EMPH 3
MAX GAIN PASS
MIN. GAIN PASS
WHIGHT
LIMITER
D010
EMPH 2
VCA
DET
EMPH 1
MOA
REC
PB
IC009
AMP
IC011(1/2)
LOGIC
IC010
AM AUDIO
A INSERT
Q608
MUTE
Q609
MUTE
Q032
MUTE
Q033
MUTE
Q030
BUFFER
Q031
BUFFER
MIX
Q023-025
AGC
Q611
MUTE
AUDIO(L+R)
(VIDEO)
AUDIO OUT (L)
AUDIO OUT (R)
PJ-3 BOARD (1/2)
YC-40 BOARD
Q925
AMP
Q923
AMP
CNJ3
EURO CONNECTOR
AUDIO L OUT
AUDIO R OUT
RV602
L CH
RV603
R CH
IC007
L-CH SIG
R-CH SIG
Vcc L
Vcc R
LED LEVEL/TRACKING METER
Q019
Q619
Q621
Q624
LEVEL METER CONTROL
METER ON/OFF
TRACK/LEVEL
MONITOR L
MONITOR R
AUDIO/NORMAL
MPX
TUNER SEL
D015
INHIBIT
Q026-029
AUDIO SELECT LOGIC
AFM
A MUTE
PB 12V
Q020,021
AUDIO MUTE & POWER FAIL DET
SW 12V
A MUTE
Q022
AUDIO OUT INHIBIT & AFM REC INHIBIT
D026
LIMITER
WHIGHT
RV005
SNR
MIN GAIN PASS
MAX GAIN PASS
EMPH 3
S4
LEVEL METER
S2
AUDIO MONITOR
S1
BATA HIFI
S5
MPX FILTER
S6
INPUT SELECT
ON
OFF
A/B
AFM TRACKING
D33
D34
NORMAL
AUTO
TUNER
LINE
SIMUL
SW 9V
FR-20 BOARD
AUDIO L IN
AUDIO R IN
AM AUDIO IN
AM AUDIO OUT
NORMAL AUDIO BLOCK
FL-8 BOARD
RV1
REC LEVEL
(L)
(R)
RV2
RV3
IC012(1/2)
Q607,613,614,623
BILINGUAL
STEREO
MIX
AUDIO IN(L)
AUDIO IN(R)
PJ-3 BOARD(1/2)
Q610
TUNER SEL
TU AUDIO L
TU AUDIO R
V DET
BILINGUAL
TUNER BLOCK
Q801,802
MIC AMP
DH-4 BOARD
CFS10
MIC
MC-10 BOARD

(2) Normal Audio Block

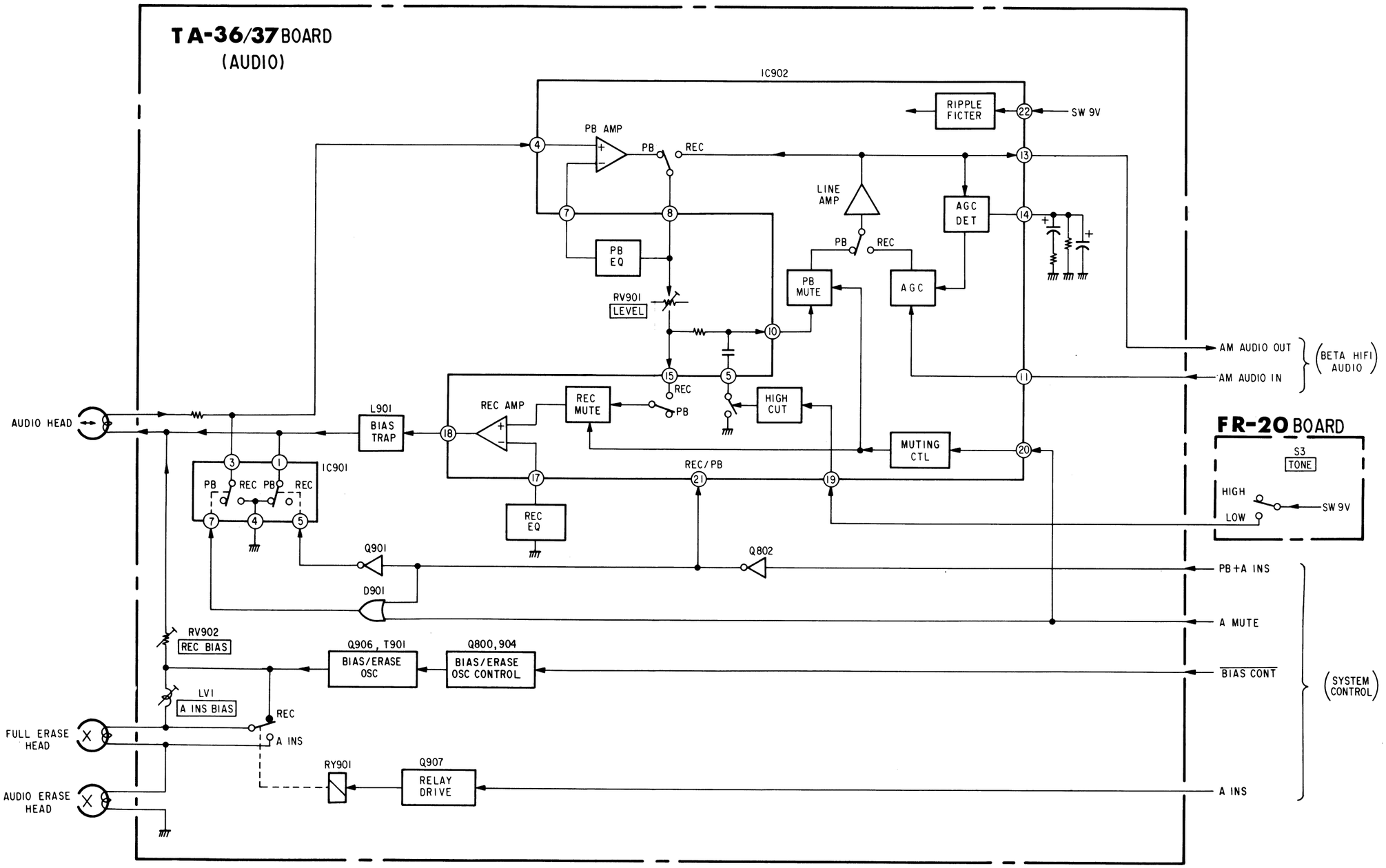

3-8. A

(1) A

REC,

(2) A

PB MO

3-8. AUDIO LEVEL DIAGRAM

(1) AFM Level Diagram (REC, EE)

REC, EE MODE

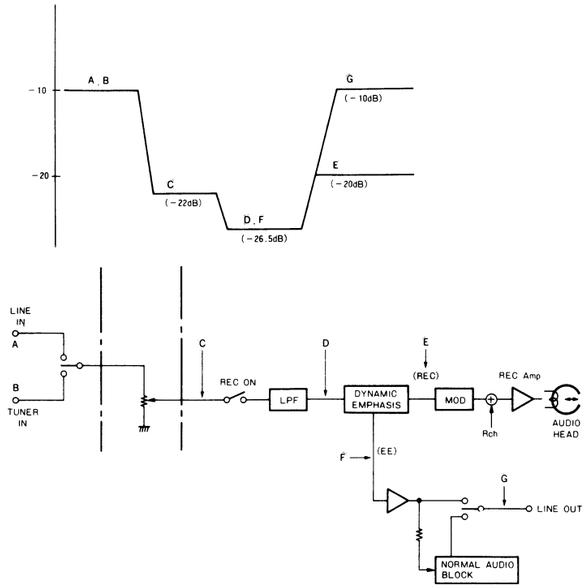

(2) AFM Level Diagram (PB)

PB MODE

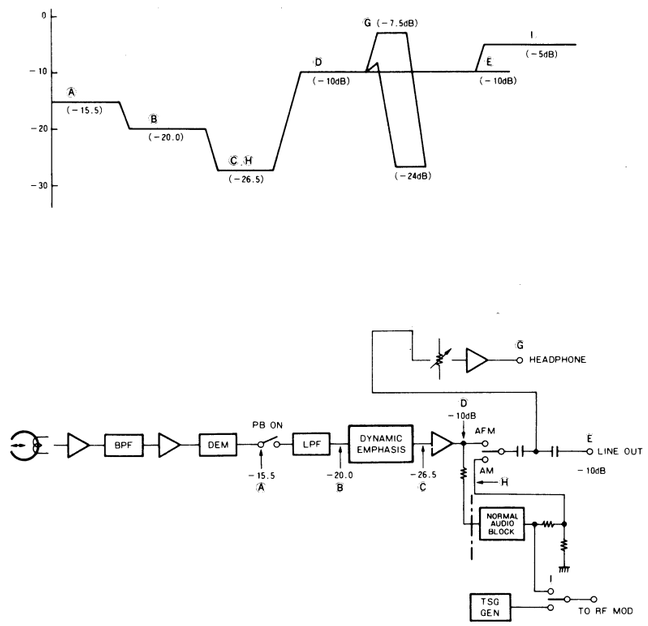

(3) Normal Audio Level Diagram (REC, EE)

REC MODE 0dB = 0.775Vrms f = 333Hz
BIAS OSC: STOPPED

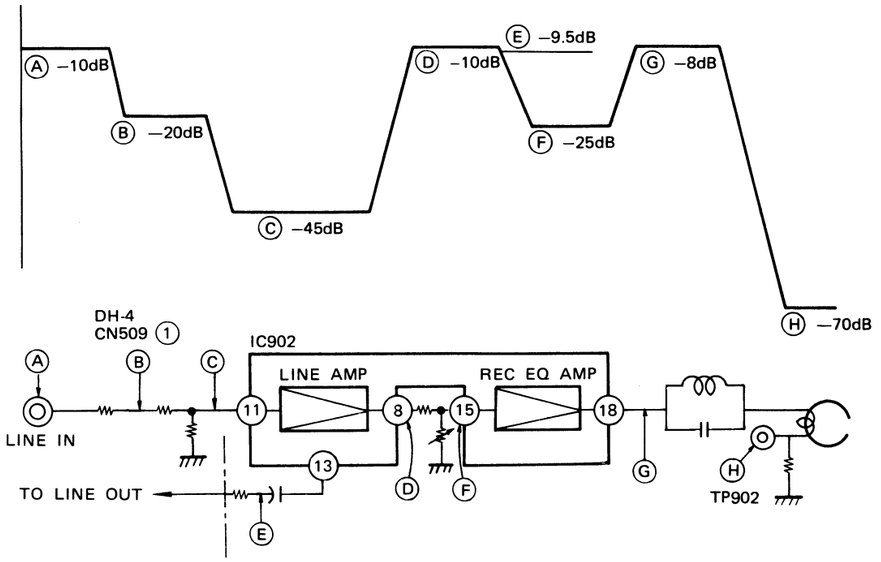

(4) Normal Audio Level Diagram (PB)

PB MODE 0dB = 0.775Vrms f = 333Hz

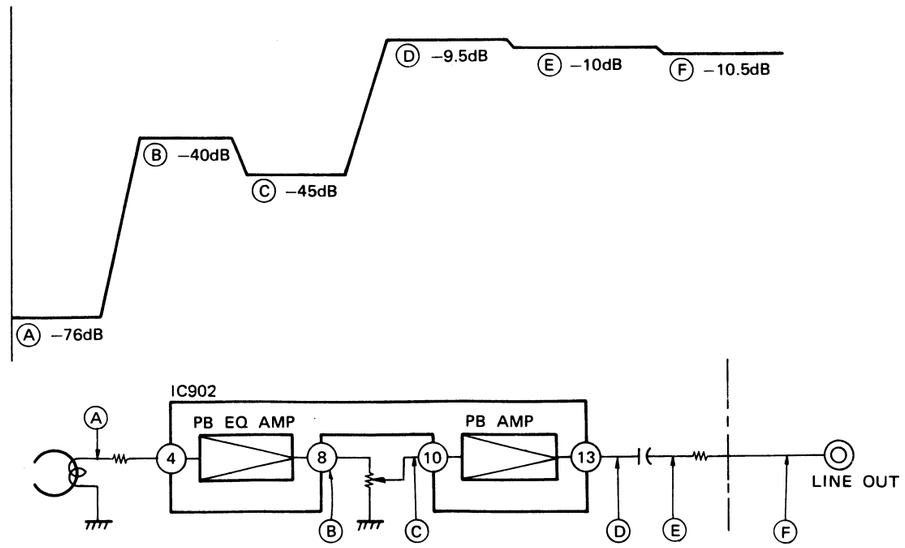

3-9. TIMER BLOCK DIAGRAM

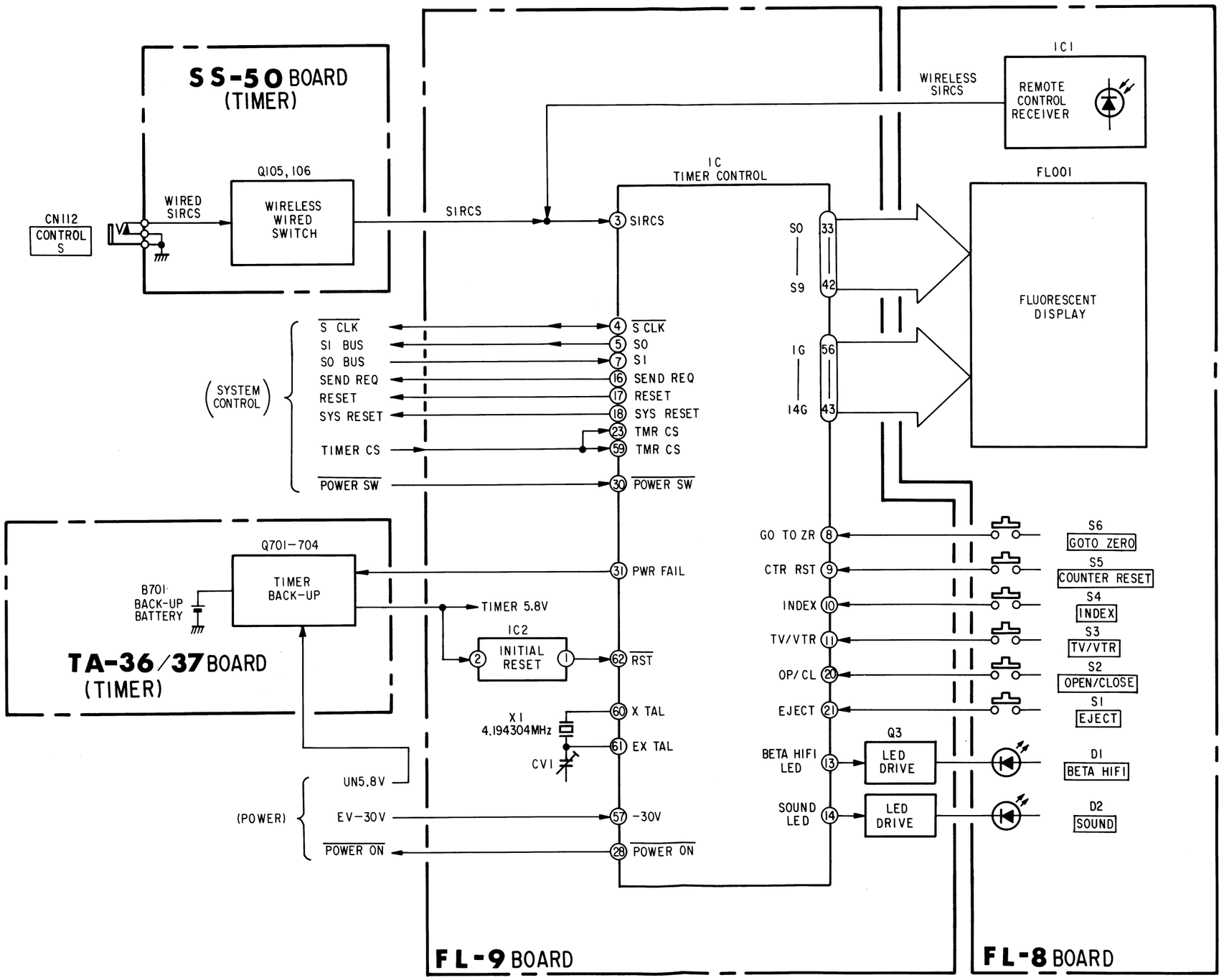

3-10. TUNER BOCK DIAGRAM
(1) ES MODEL

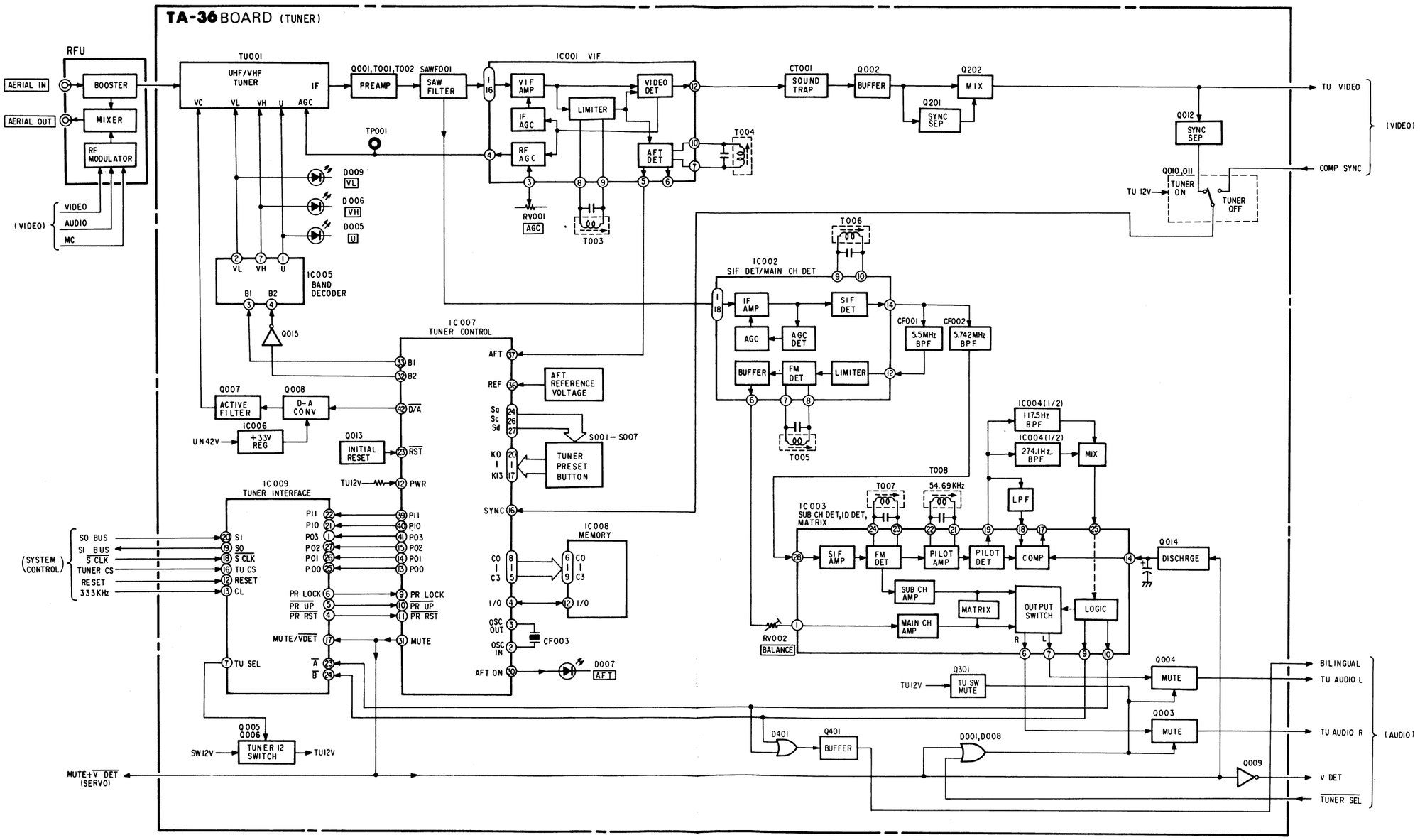

MC-Service

(2) E MODEL

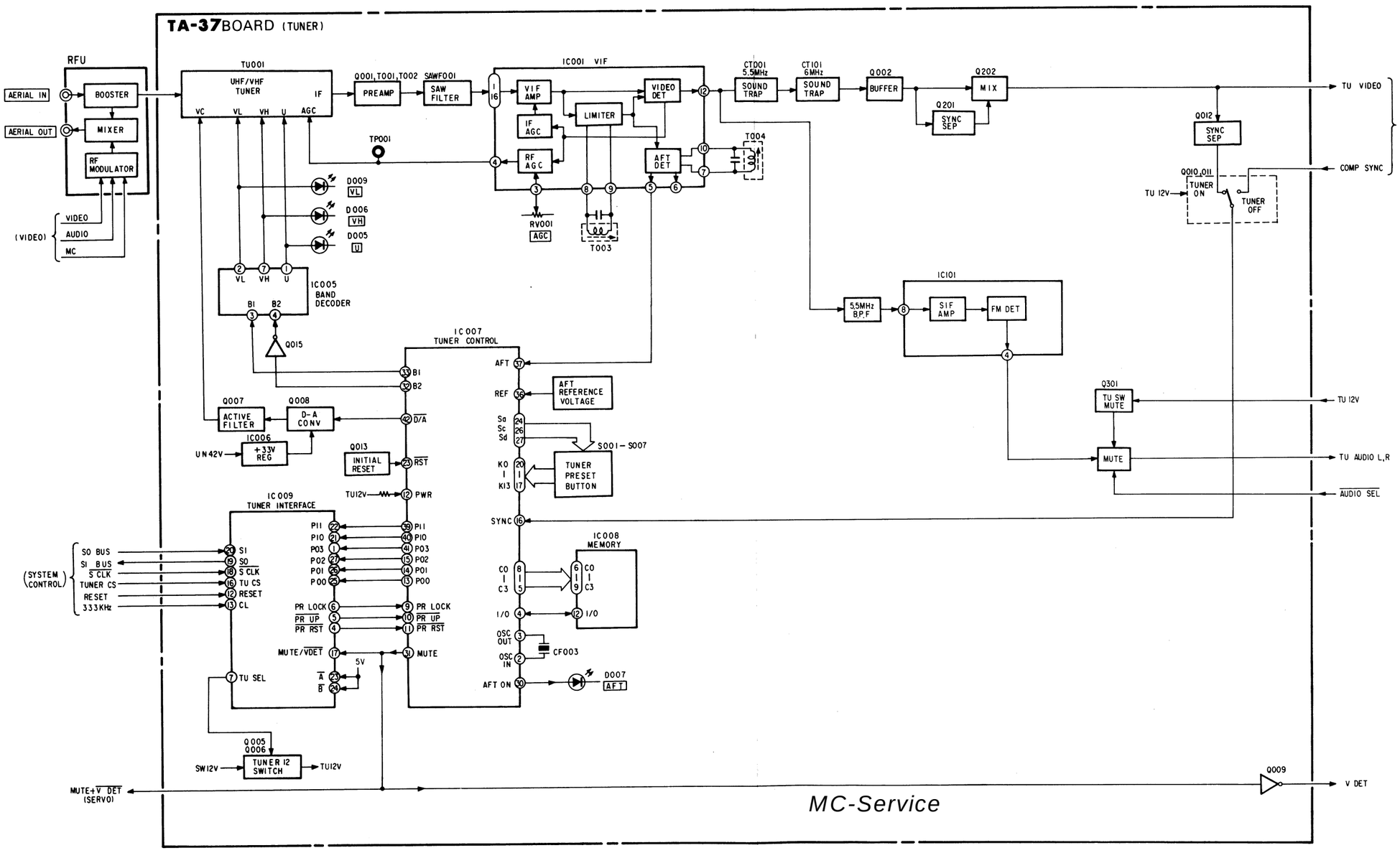
TA-37BOARD (TUNER)
RFU
AERIAL IN
AERIAL OUT
BOOSTER
MIXER
RF MODULATOR
VIDEO
AUDIO
MC
(VIDEO)
TU001
UHF/VHF TUNER
VC VL VH U AGC IF
Q001,T001,T002
PREAMP
SAWF001
SAW FILTER
IC001 VIF
VIF AMP
IF AGC
RF AGC
LIMITER
VIDEO DET
AFT DET
CT001 5.5MHz
SOUND TRAP
CT101 6MHz
SOUND TRAP
Q002
BUFFER
Q202
MIX
Q201
SYNC SEP
TU VIDEO
COMP SYNC
(VIDEO)
Q012
SYNC SEP
Q010,011
TUNER ON
TUNER OFF
TU 12V
TP001
T004
T003
D009 VL
D006 VH
D005 U
RV001 AGC
IC005 BAND DECODER
B1 B2
Q015
IC007 TUNER CONTROL
AFT
REF
AFT REFERENCE VOLTAGE
Sa Sc Sd
S001 – S007
KO KI3
TUNER PRESET BUTTON
SYNC
B1
B2
D/A
RST
PWR
Q007 ACTIVE FILTER
Q008 D-A CONV
IC006 +33V REG
UN42V
Q013 INITIAL RESET
TU12V
IC009 TUNER INTERFACE
(SYSTEM CONTROL)
SO BUS
SI BUS
S CLK
TUNER CS
RESET
333KHz
SI
SO
S CLK
TU CS
RESET
CL
PI1 PI0 PO3 PO2 PO1 PO0
PR LOCK
PR UP
PR RST
MUTE/VDET
MUTE
TU SEL
A B
5V
IC008 MEMORY
CO C3
I/O
OSC OUT
OSC IN
CF003
AFT ON
D007 AFT
Q005 Q006
TUNER 12 SWITCH
SW12V
TU12V
IC101
5.5MHz B.P.F
SIF AMP
FM DET
Q301
TU SW MUTE
TU 12V
MUTE
TU AUDIO L,R
AUDIO SEL
Q009
V DET
MUTE+V DET (SERVO)
MC-Service

3-11. POWER BLOCK DIAGRAM

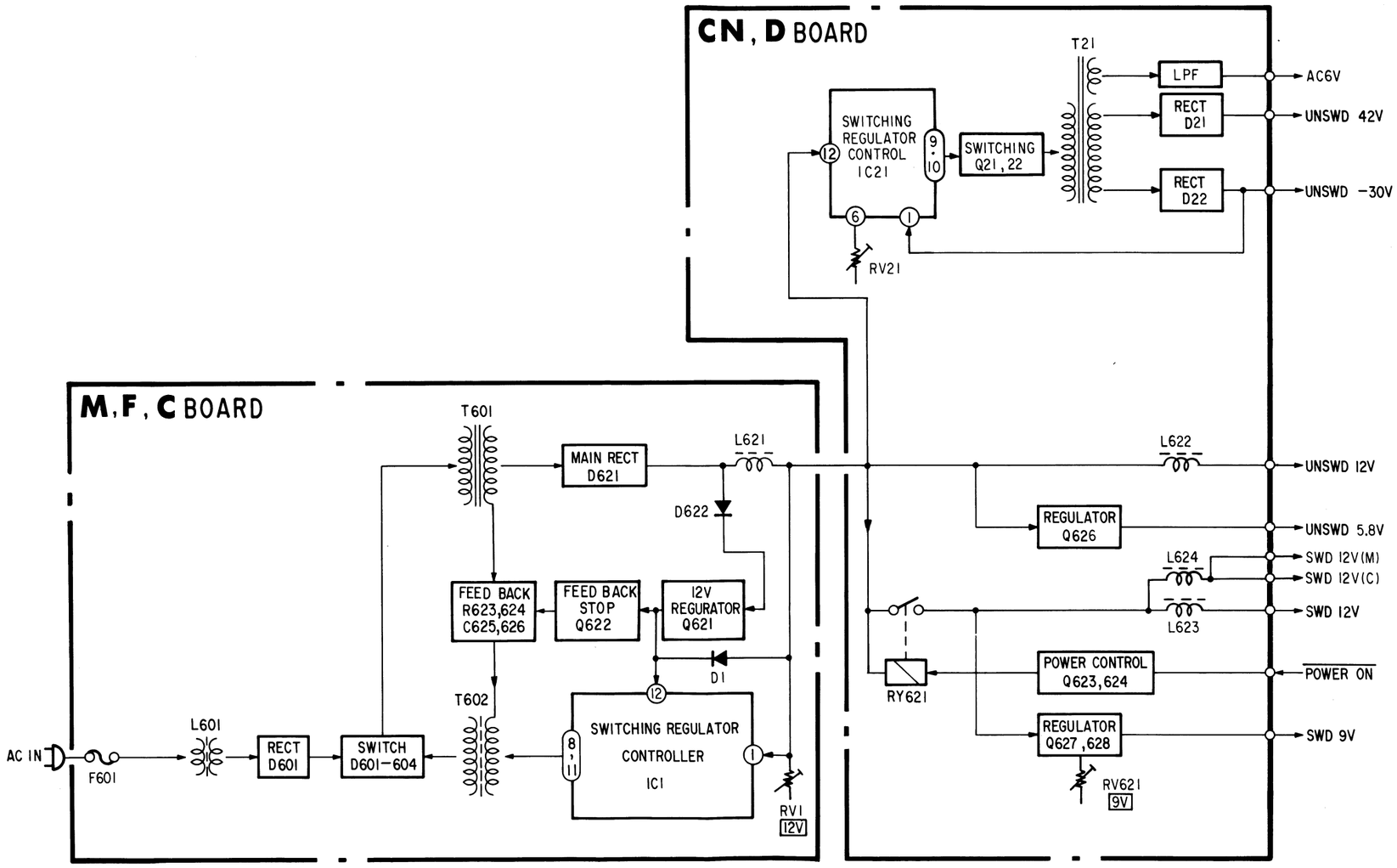

MC-Service

SECTION 4

SCHEMATIC DIAGRAM, PRINTED WIRING BOARDS

4-1. FRAME SCHEMATIC DIAGRAM

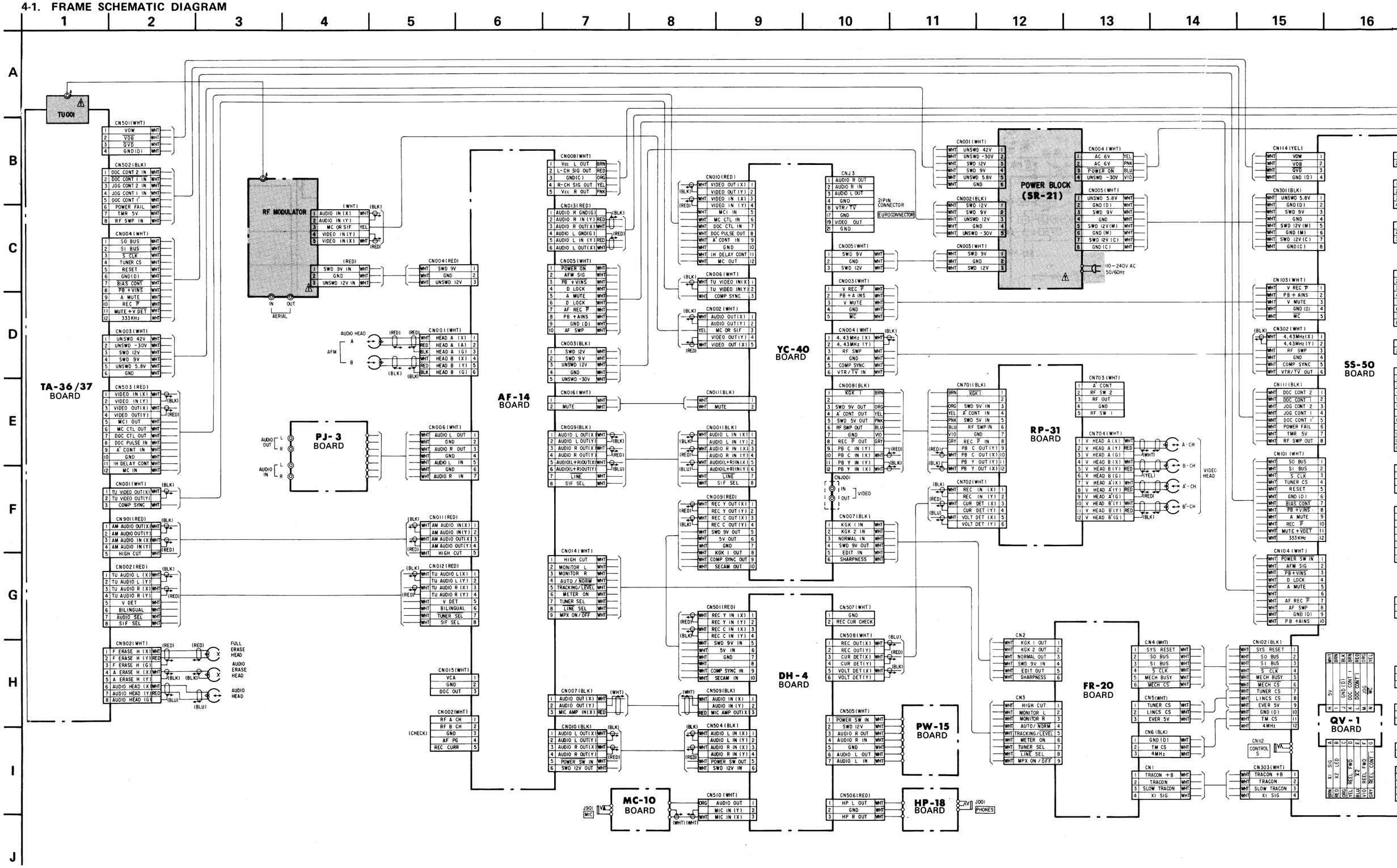

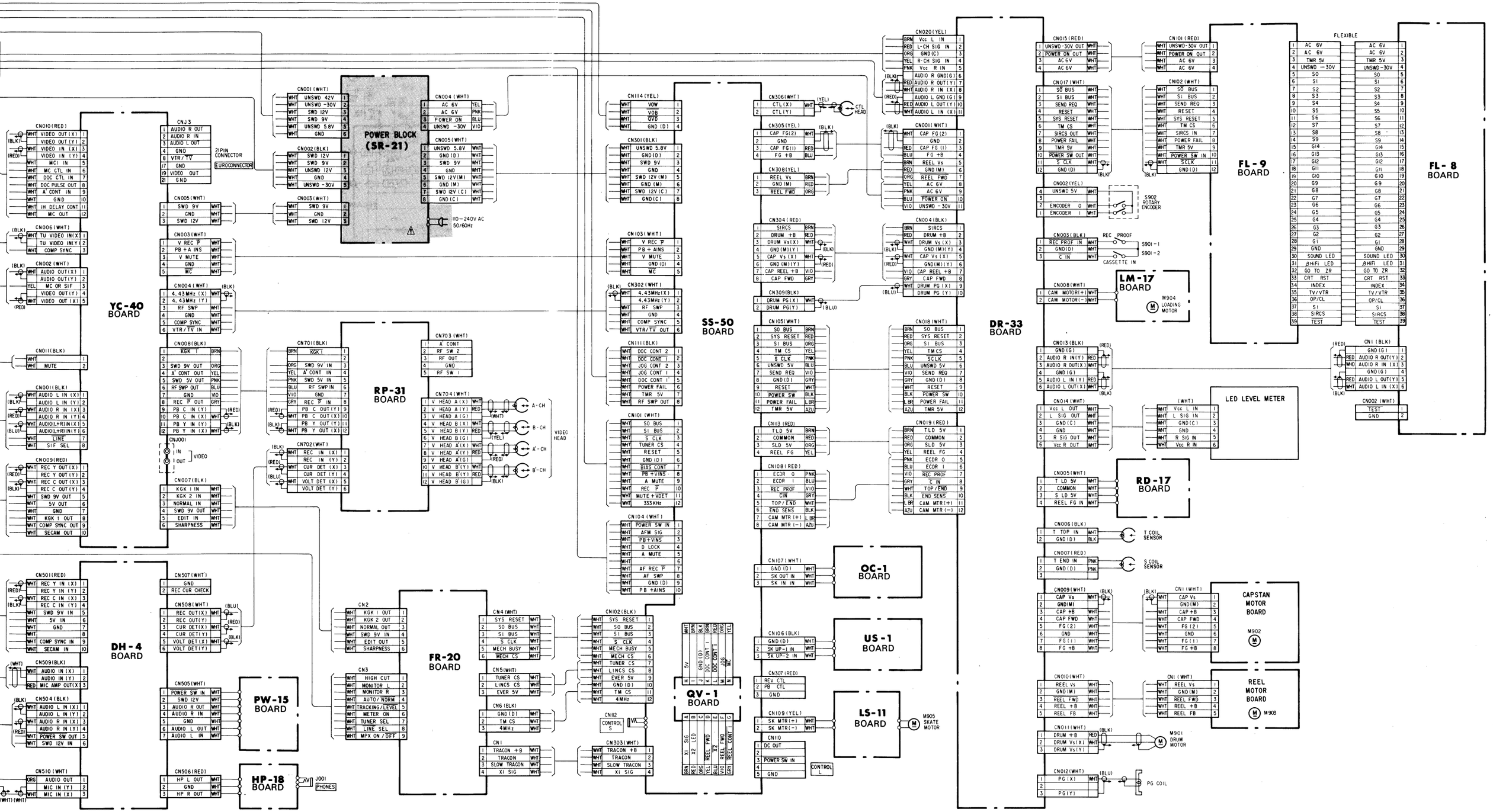
8 9 10 11 12 13 14 15 16 17 18 19 20 21 22 23 24
A B C D E F G H I J
POWER BLOCK (SR-21)
110–240V AC 50/60Hz
YC-40 BOARD
DH-4 BOARD
RP-31 BOARD
FR-20 BOARD
SS-50 BOARD
PW-15 BOARD
HP-18 BOARD
DR-33 BOARD
OC-1 BOARD
US-1 BOARD
LS-11 BOARD
QV-1 BOARD
FL-9 BOARD
FL-8 BOARD
LM-17 BOARD
RD-17 BOARD
CAPSTAN MOTOR BOARD
REEL MOTOR BOARD
LED LEVEL METER
2P/3P CONNECTOR
EUROCONNECTOR
VIDEO HEAD
A-CH
B-CH
A'-CH
B'-CH
CTL HEAD
S902 ROTARY ENCODER
S901-1
S901-2
REC PROOF
CASSETTE IN
M904 LOADING MOTOR
M905 SKATE MOTOR
M901 DRUM MOTOR
M902
M903
PG COIL
T.COIL SENSOR
S.COIL SENSOR
FLEXIBLE
CONTROL S
CONTROL L

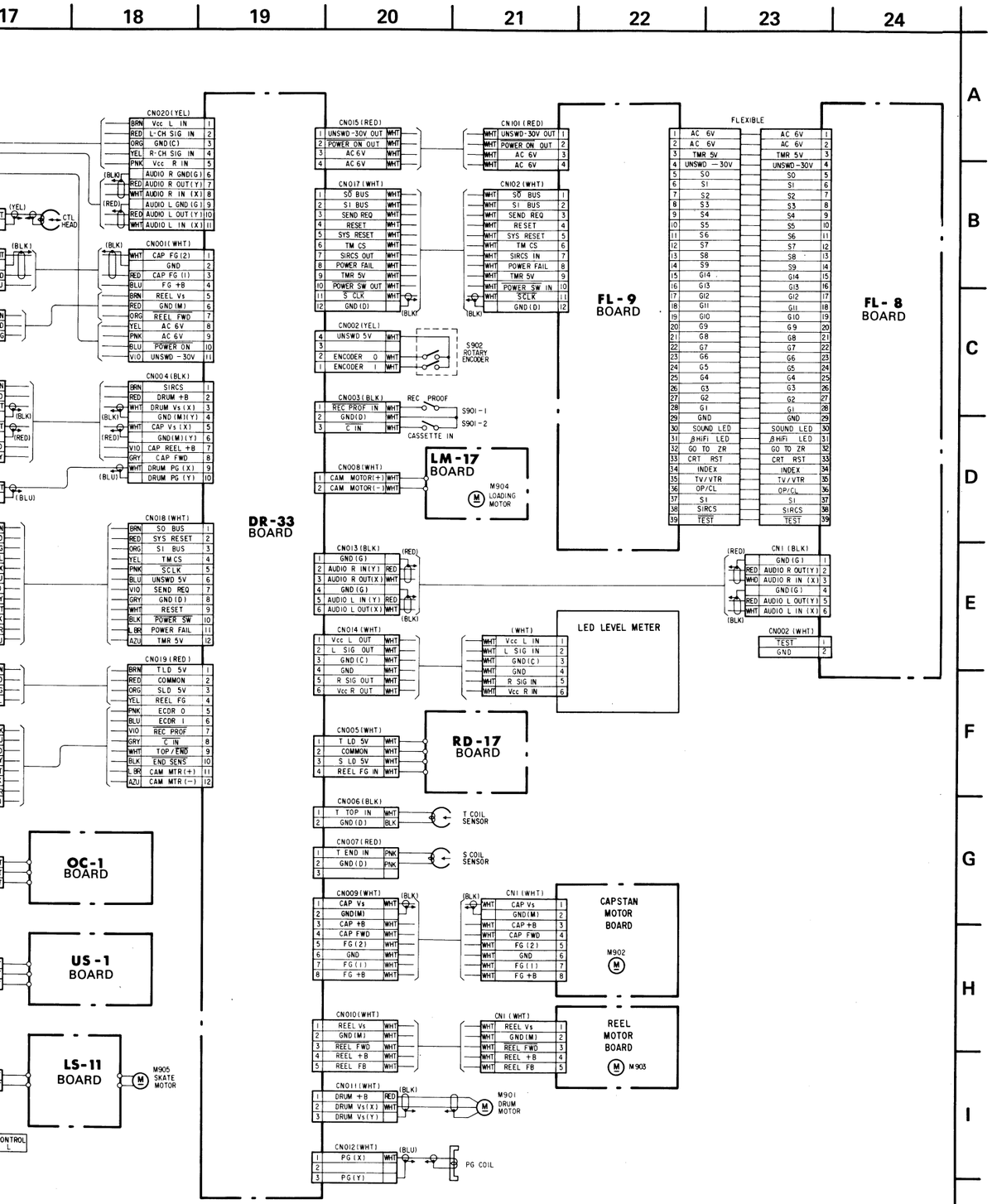

YC-40 BOARD (PAL / SECAM)

PAL 0.24Vp-p IC002 ⑦ REC/PB	6Vp-p IC006 ㉚ REC/PB	PAL 0.5Vp-p IC009 ㉜ PB	(SECAM) 0.44Vp-p IC002 ⑦ REC/PB
PAL 0.75Vp-p IC004 ⑧ PB	0.32Vp-p (5.12MHz) IC006 ㉝ REC/PB	PAL 2Vp-p IC009 ㉟ PB	IC004 ⑧ 0.85Vp-p IC009 ㉜ 0.6Vp-p IC004 ⑧ REC IC009 ㉜ REC
PAL ① 0.8Vp-p ㊴ 1.4Vp-p IC006 ①, ㊴ REC	PAL ㊲ 0.34Vp-p ㊴ 1.4Vp-p IC006 ㊲, ㊴ PB	0.5Vp-p IC009 ㊳ PB	IC004 ⑧ 0.44Vp-p IC006 ㊲ 0.18Vp-p IC004 ⑧ PB IC006 ㊲ PB
PAL ①, ㉟ 0.8Vp-p ⑦ 0.18Vp-p IC006 ①, ⑦, ㉟ PB	PAL ③ 1.2Vp-p ㉟ 2V p-p IC009 ③, ㉟ REC	0.5Vp-p IC401 ㉖ PB	① 0.85Vp-p ⑤ 0.32Vp-p ㉟ 0.85Vp-p IC006 ①, ⑤, ㉟ REC
PAL ⑤ 0.28Vp-p ㉟ 0.8Vp-p IC006 ⑤, ㉟ REC	⑥ 1Vp-p ㊲ 0.5Vp-p IC009 ⑥, ㊲ REC	5Vp-p 2V CN004 ③	① 0.85Vp-p ⑦ 0.18Vp-p IC006 ①, ⑦ PB
2.6Vp-p (4.43MHz) IC006 ⑭ REC/PB	V:0.2V/div H:0.1μsec/div IC009 ⑱ PB		0.85Vp-p IC006 ㊴ REC
1Vp-p (13.3MHz) IC006 ⑲ REC/PB	V:0.2V/div H:0.1μsec/div IC009 ㉑ PB		③ 1.2Vp-p ㉟ 2.2Vp-p IC009 ③, ㉟ REC
㉓ HD ㉒ COMP SYNC ㉒ 4.5Vp-p ㉓ 5Vp-p IC006 ㉒, ㉓ REC/PB	V:0.5V/div H:0.1μsec/div IC009 ㉕ REC		0.32Vp-p IC009 ㉜ PB
	1Vp-p IC009 ㉙ PB		2.4Vp-p IC009 ㉟ PB
BF 3.2Vp-p IC006 ㉘ PB	0.18Vp-p IC009 ㉚ REC		

RP-31 BOARD

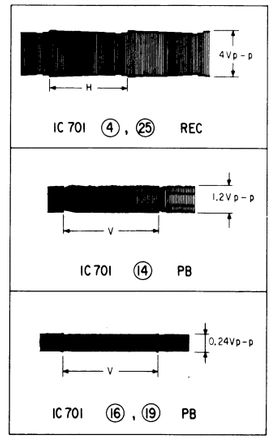

DH-4 BOARD

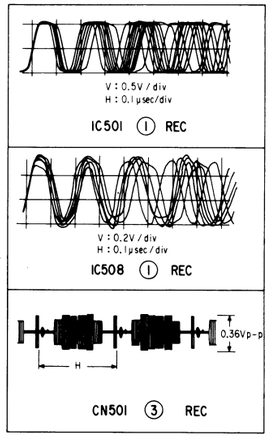

<ES MODEL>

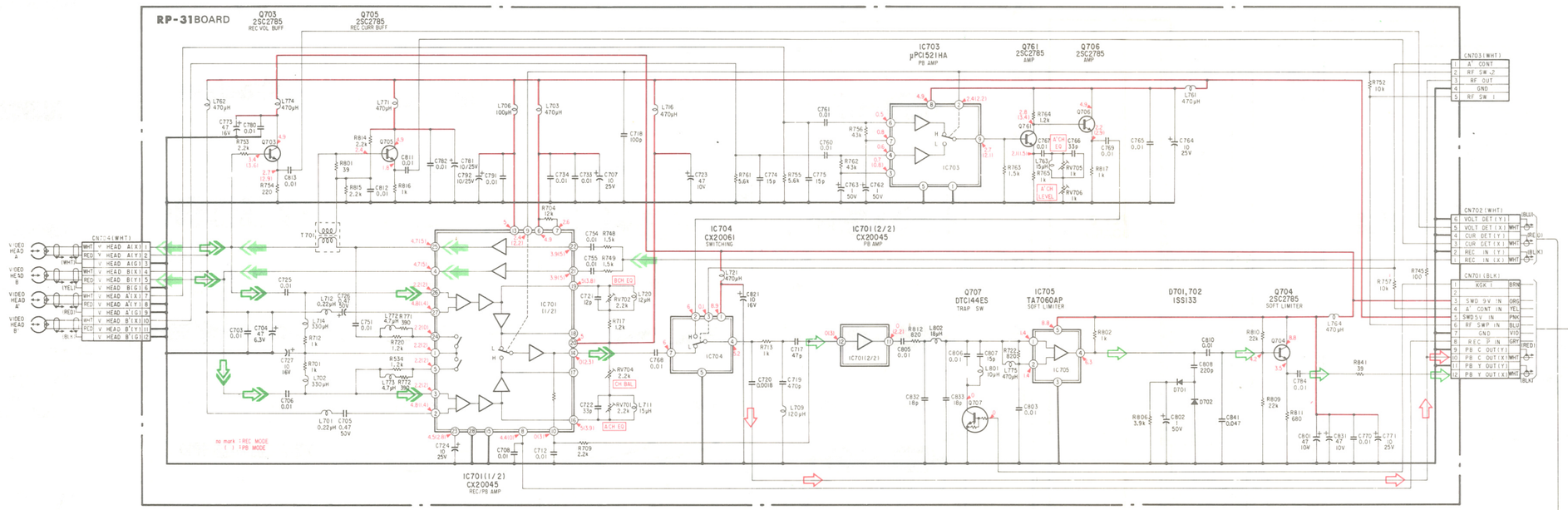

- Signal path
  - : REC Y SIGNAL
  - : PB Y SIGNAL
  - : REC CHROMA SIGNAL
  - : PB CHROMA SIGNAL
  - : REC Y/C SIGNAL
  - : PB Y/C SIGNAL
  - : PB AUDIO SIGNAL

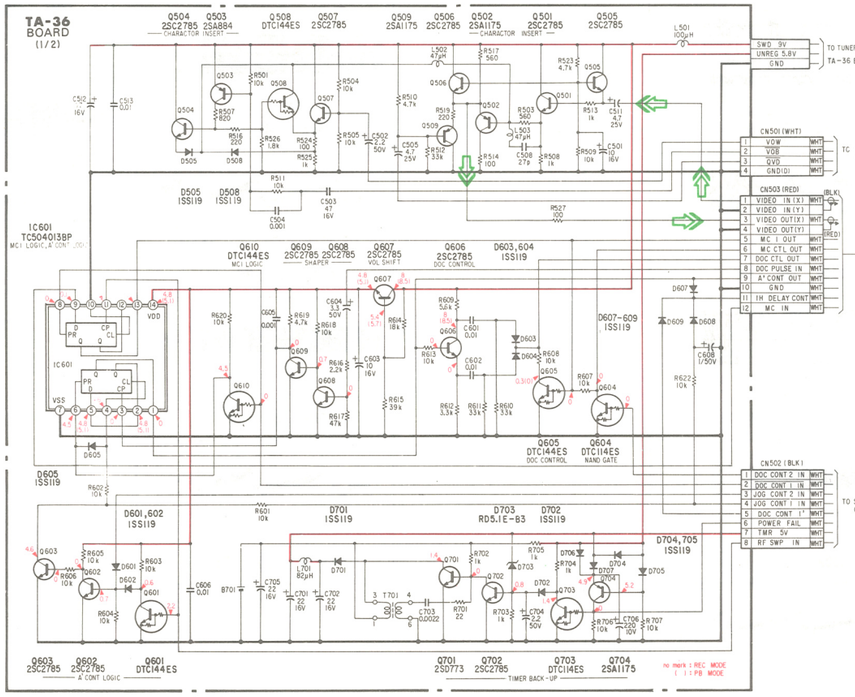

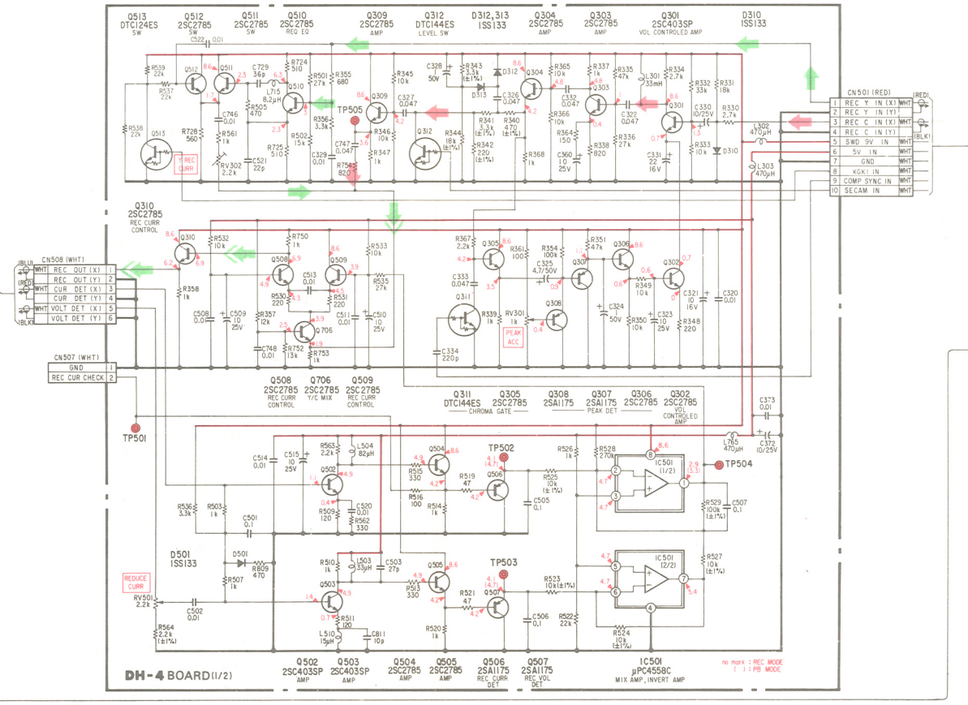

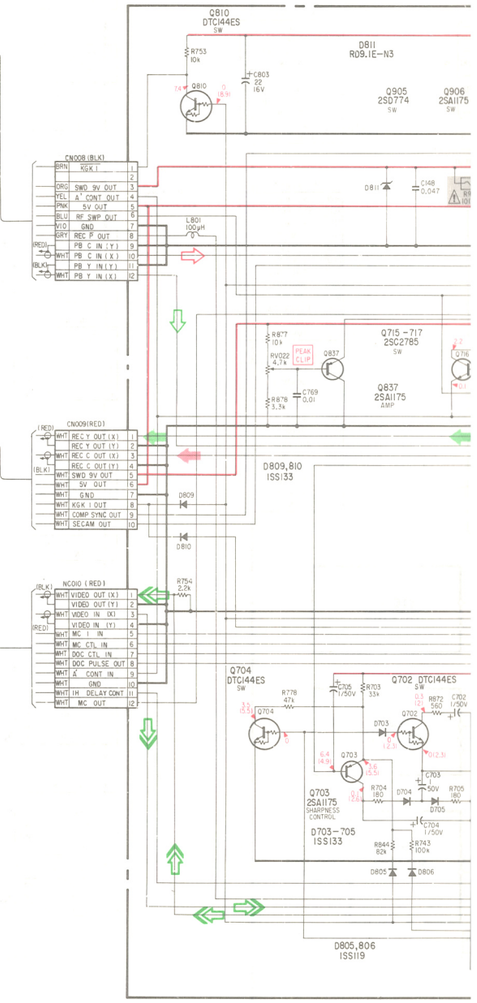

10 11 12 13 14 15 16 17 18 19 20 21 22 23 24 25 26

- Signal path
  - : REC Y SIGNAL
  - : PB Y SIGNAL
  - : REC CHROMA SIGNAL
  - : PB CHROMA SIGNAL
  - : REC Y/C SIGNAL
  - : PB Y/C SIGNAL
  - : PB AUDIO SIGNAL

YC-40 BOARD

18 19 20 21 22 23 24 25 26 27 28 29 30 31 32 33

A B C D E F G H I J

C-40 BOARD

ES MODEL; YC-40 (Y/CHROMA SIGNAL PROCESS), RP-31 (VIDEO SIGNAL REC/PB AMP), TA-36 (TUNER, AUDIO), DH-4 (A/V HEAD AMP) PRINTED WIRING BOARDS

– Ref. No. YC-40 BOARD: 1,000 series, RP-31 BOARD: 6,000 series, TA-36 BOARD: 4,000 series, DH-4 BOARD: 7,000 series –

Note on Schematic Diagram:

- All resistors are in ohms, 1/6 W unless otherwise noted. kΩ: 1000 Ω, MΩ: 1000 kΩ
- All capacitors are in μF unless otherwise noted. p: μμF 50WV or less are not indicated except for electrolytics.
- All variable and adjustable resistors have characteristic curve B, unless otherwise noted.
- : nonflammable resistor.
- : fusible resistor.
- The red lines show the main voltages.
- All voltages are dc measured with a VOM (10 MΩ).
- : B+ bus.

Note: The components identified by shading and mark ⚠ are critical for safety. Replace only with part number specified.

Note on Printed Wiring Board:

- : Indicates a leadwire mounted on the component side.
- : Indicates a leadwire mounted on the printed side.
- : soldering side.
- : B+ pattern
- : B– pattern
- Digital transistor (YC-40: Q15, 25, 31, 35, 100, 101, 102, 702, 704, 707, 709, 720, 721, 810, 811, 812, 813, 814, 815, 826, 834, 910, 922, 926. RP-31: Q707. DH-4: Q311, 312. TA-36: Q003, 004, 006, 013, 014, 015, 301, 508, 601, 604, 605, 610, 703, 800, 802, 901) transistors with resistors.
  Refer to the YC-40, RP-31, DH-4, TA-36 boards schematic diagram for digital transistor.

When indicating parts by reference number, please include the board name.

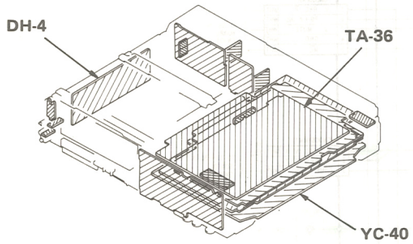

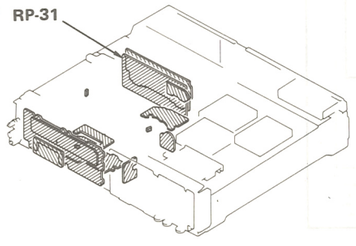

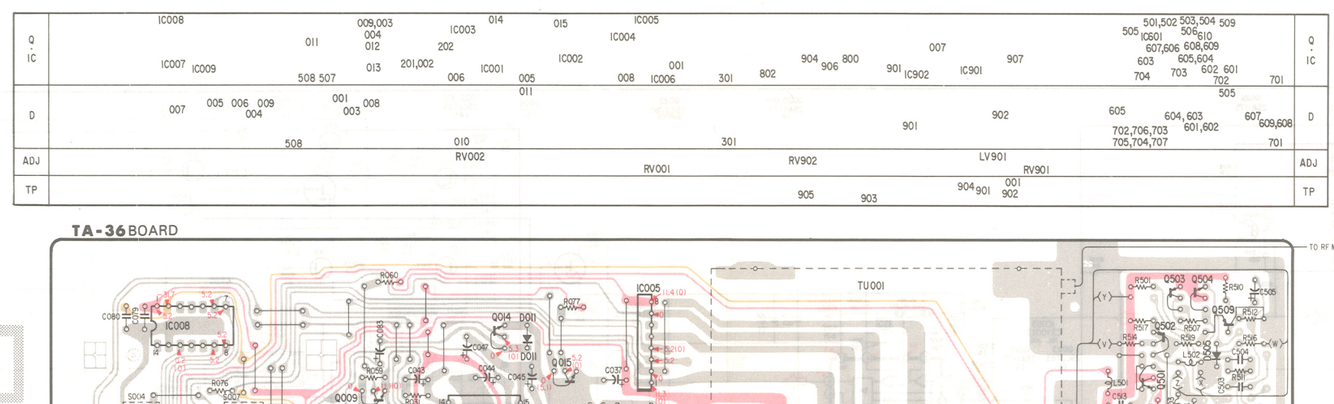

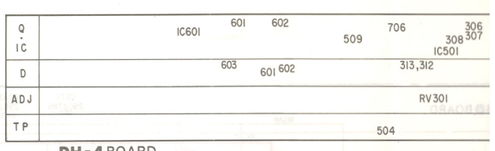

TA-36 BOARD

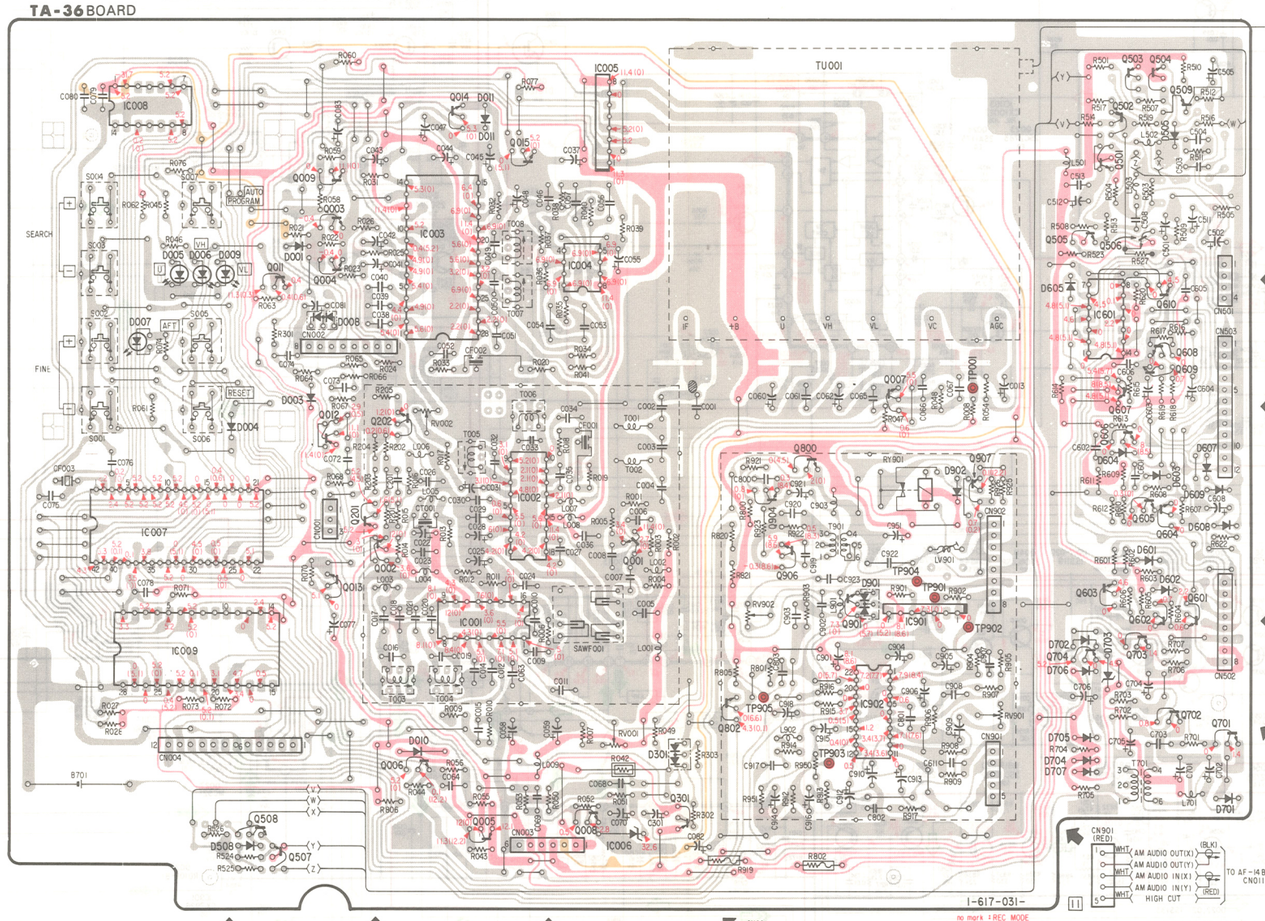

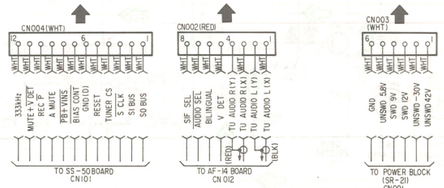

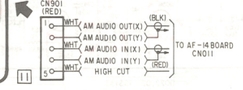

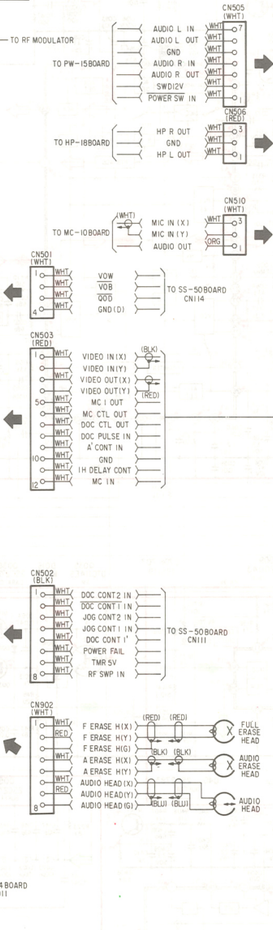

DH-4 BOARD

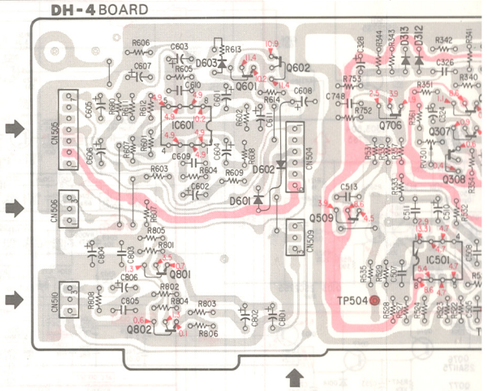

RP-31 BOARD

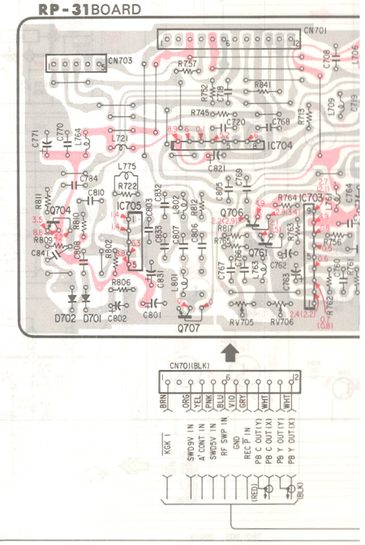

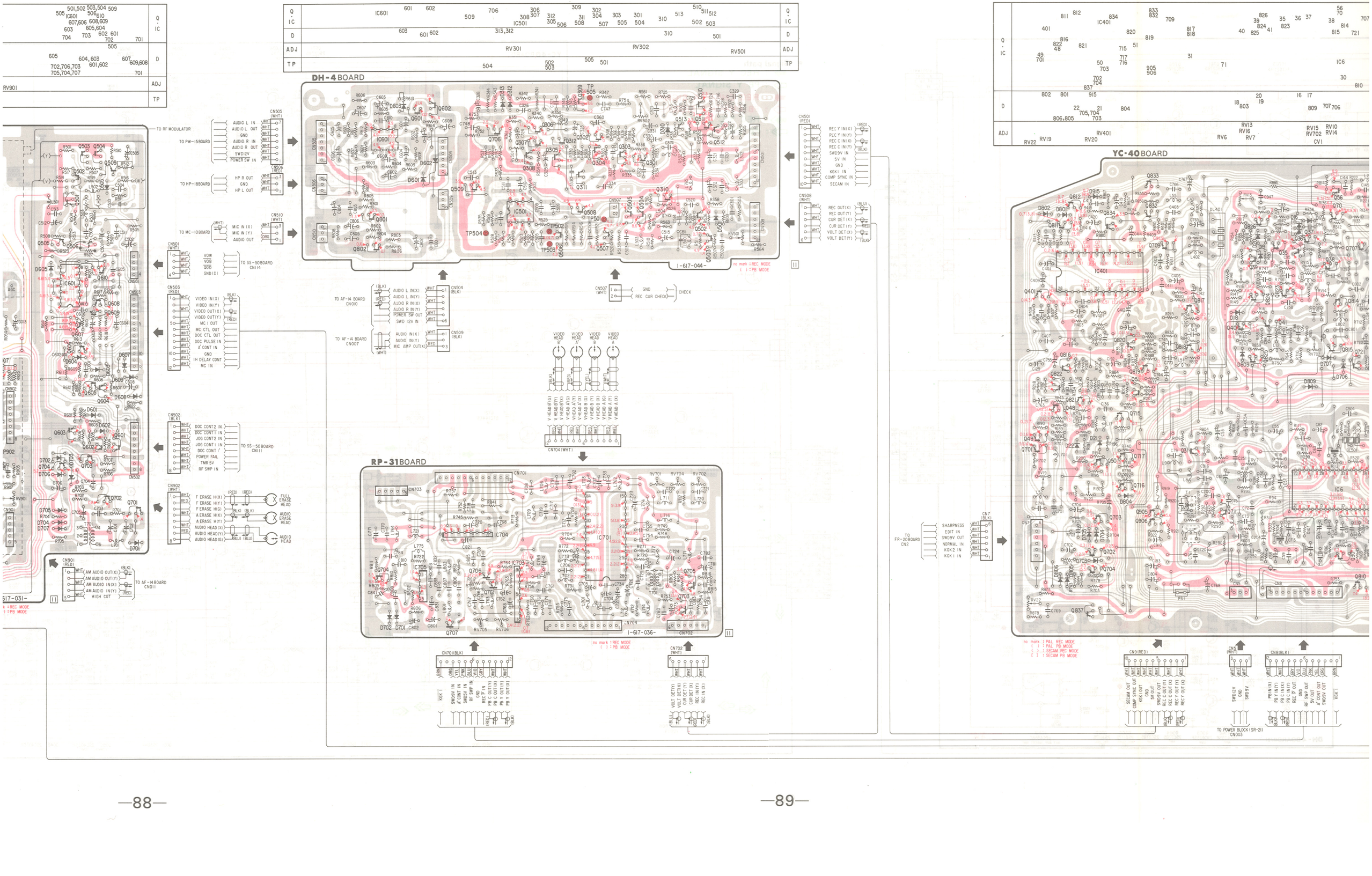
11
12
13
14
15
16
17
18
19
20
21
22
23
24
25
26
DH-4 BOARD
YC-40 BOARD
RP-31 BOARD
TO RF MODULATOR
TO PW-15 BOARD
TO HP-18 BOARD
TO MC-10 BOARD
TO SS-50 BOARD CN114
TO AF-14 BOARD CN010
TO AF-14 BOARD CN007
TO AF-14 BOARD CN011
TO SS-50 BOARD CN111
TO FR-20 BOARD CN2
TO POWER BLOCK (SR-21) CN003
CN501 (WHT)
CN502 (BLK)
CN503 (RED)
CN504 (BLK)
CN505 (WHT)
CN506 (RED)
CN507 (WHT)
CN508 (WHT)
CN509 (BLK)
CN510 (WHT)
CN701 (BLK)
CN702 (WHT)
CN704 (WHT)
CN901 (RED)
CN902 (WHT)
CN91 (RED)
CN5 (WHT)
CN8 (BLK)
CN7 (BLK)
VIDEO HEAD B'
VIDEO HEAD A'
VIDEO HEAD B
VIDEO HEAD A
no mark : REC MODE
( ) : PB MODE
no mark : PAL REC MODE
( ) : PAL PB MODE
( ) : SECAM REC MODE
[ ] : SECAM PB MODE

18 19 20 21 22 23 24 25 26 27 28 29 30 31 32 33

A B C D E F G H I J

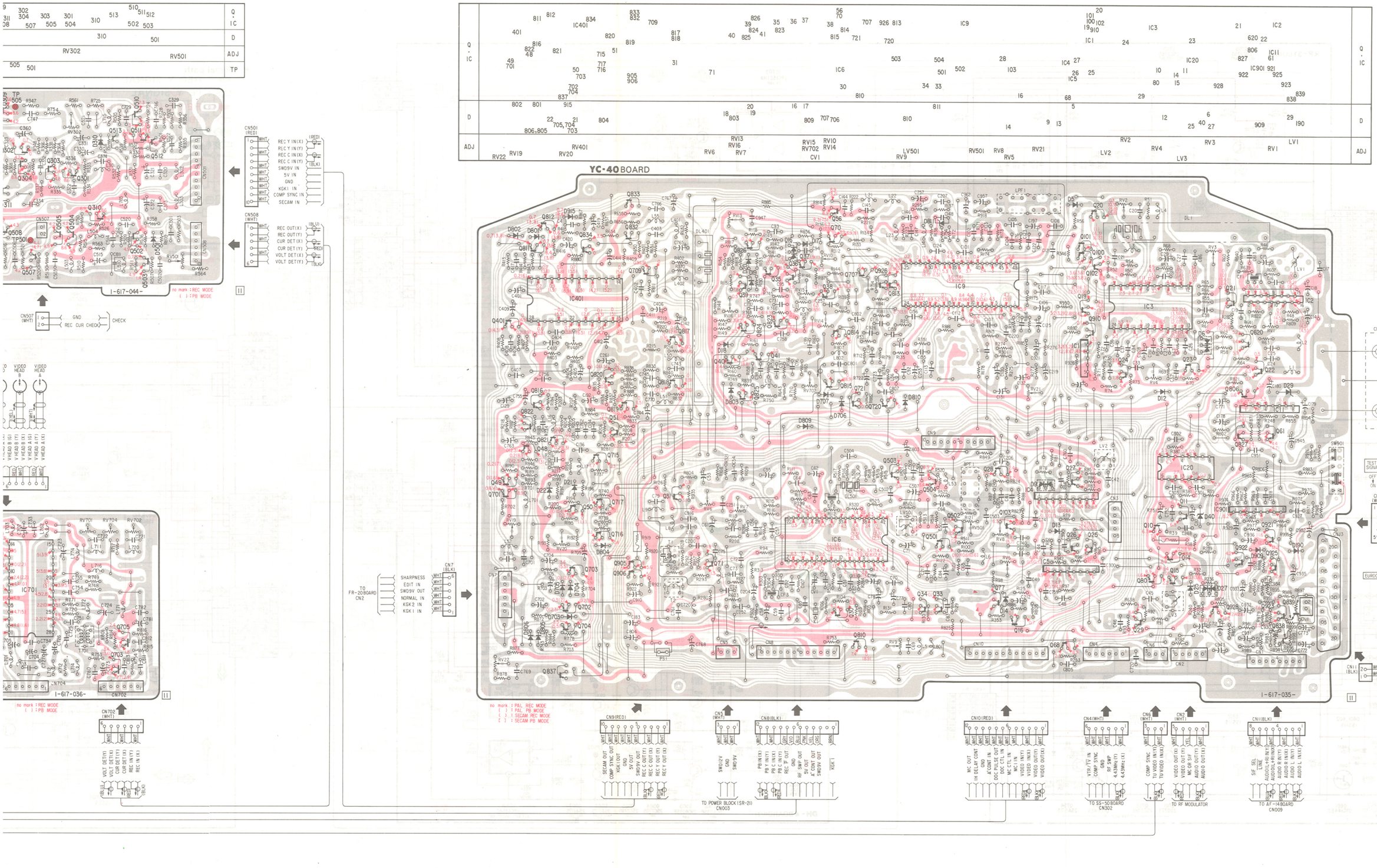

4-3. E MODEL; YC-40 (Y/CHROMA SIGNAL PROCESS), RP-31 (VIDEO SIGNAL REC/PB AMP), TA-37 (TUNER, AUDIO), DH-4 (A/V HEAD AMP) SCHEMATIC DIAGRAMS

– Ref. No. YC-40 BOARD: 1,000 series, RP-31 BOARD: 6,000 series, TA-37 BOARD: 5,000 series, DH-4 BOARD: 7,000 series –

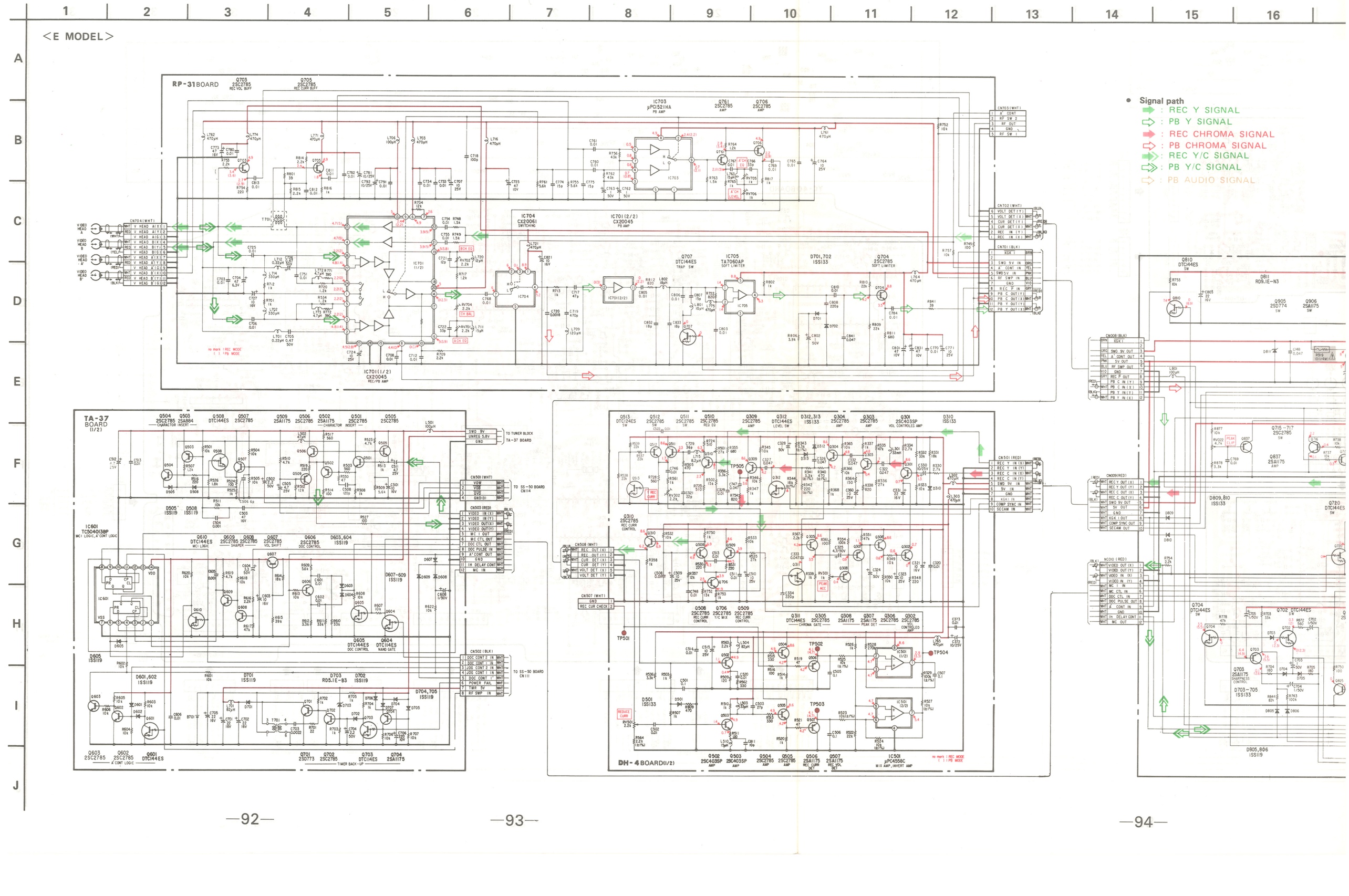

11 12 13 14 15 16 17 18 19 20 21 22 23 24 25 26 27

- Signal path
  - : REC Y SIGNAL
  - : PB Y SIGNAL
  - : REC CHROMA SIGNAL
  - : PB CHROMA SIGNAL
  - : REC Y/C SIGNAL
  - : PB Y/C SIGNAL
  - : PB AUDIO SIGNAL

YC-40 BOARD

18 19 20 21 22 23 24 25 26 27 28 29 30 31 32 33

A B C D E F G H I J

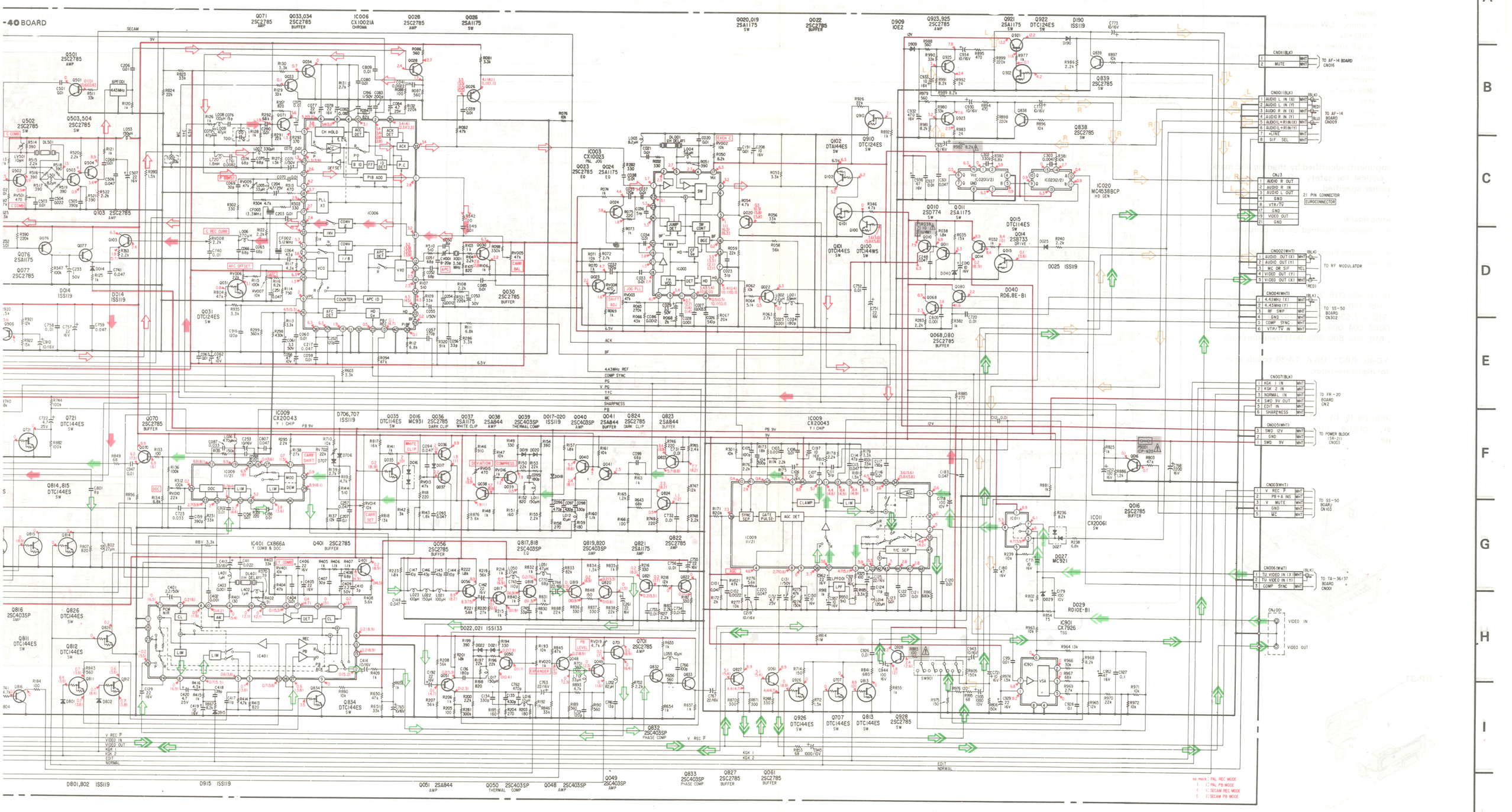

Note on Schematic Diagram:

- All resistors are in ohms, 1/6 W unless otherwise noted. kΩ: 1000 Ω, MΩ: 1000 kΩ
- All capacitors are in μF unless otherwise noted. p: μμF 50WV or less are not indicated except for electrolytics.
- All variable and adjustable resistors have characteristic curve B, unless otherwise noted.
- : nonflammable resistor.
- : fusible resistor.
- The red lines show the main voltages.
- All voltages are dc measured with a VOM (10 MΩ).
- : B+ bus.
- : B– bus.

Note: The components identified by shading and mark ⚠ are critical for safety. Replace only with part number specified.

Note on Printed Wiring Board:

- : Indicates a leadwire mounted on the component side.
- : Indicates a leadwire mounted on the printed side.
- : soldering side.
- : B+ pattern
- : B– pattern
- Digital transistor (YC-40: Q15, 31, 35, 100, 101, 102, 702, 704, 707, 709, 720, 721, 810, 811, 812, 813, 814, 815, 826, 834, 910, 922, 926. RP-31: Q707. DH-4: Q311, 312. TA-36: Q003, 004, 006, 013, 014, 015, 301, 508, 601, 604, 605, 610, 703, 800, 802, 901) transistors with resistors.
  Refer to the YC-40, RP-31, DH-4, TA-36 boards schematic diagram for digital transistor.

When indicating parts by reference number, please include the board name.

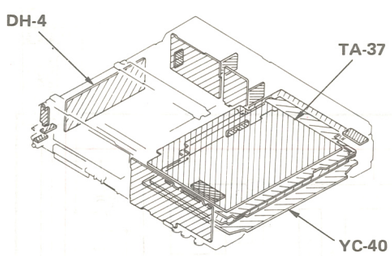

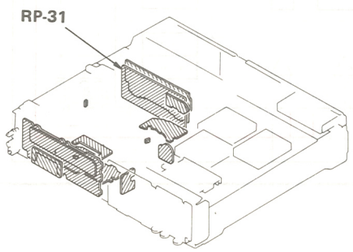

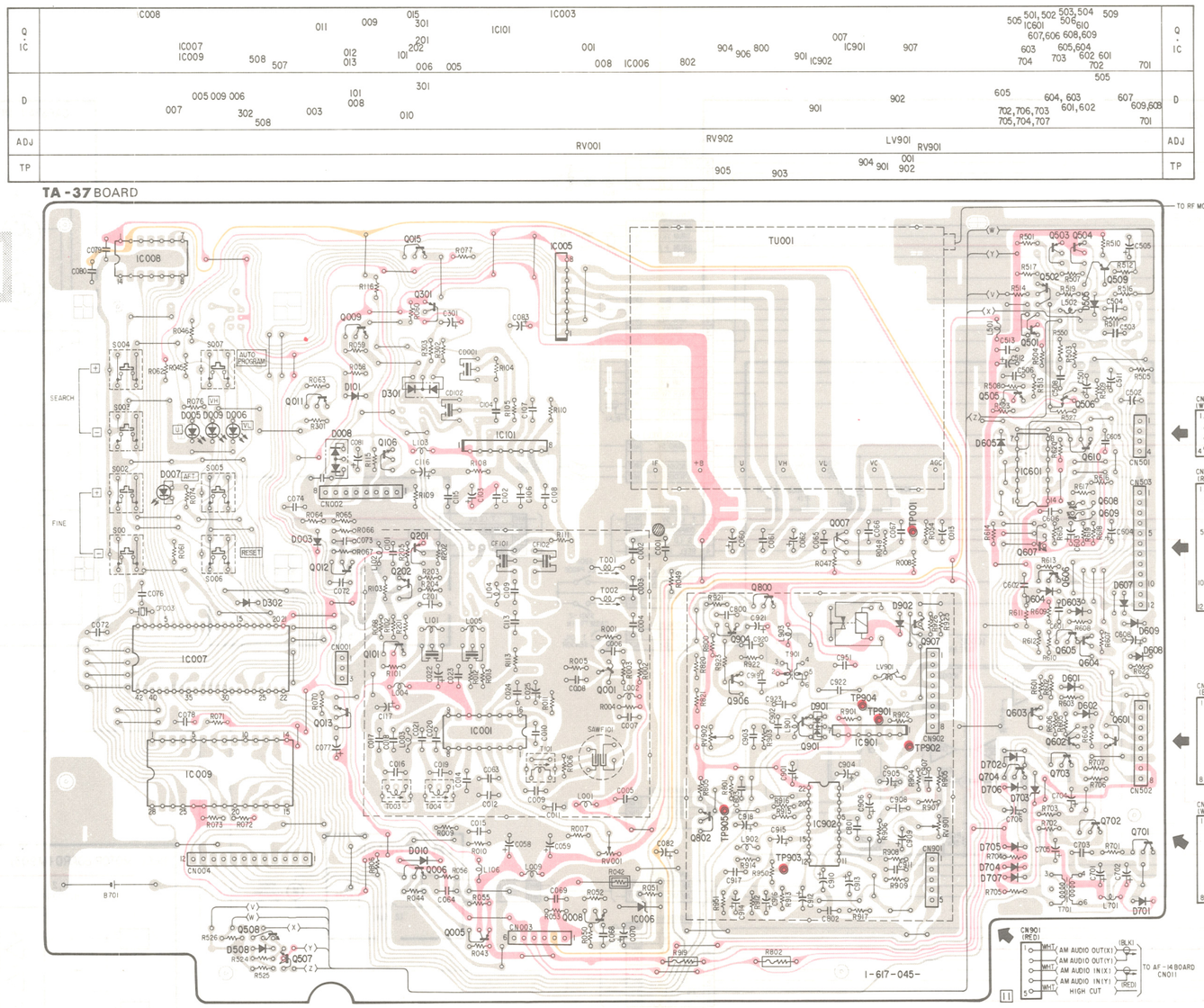

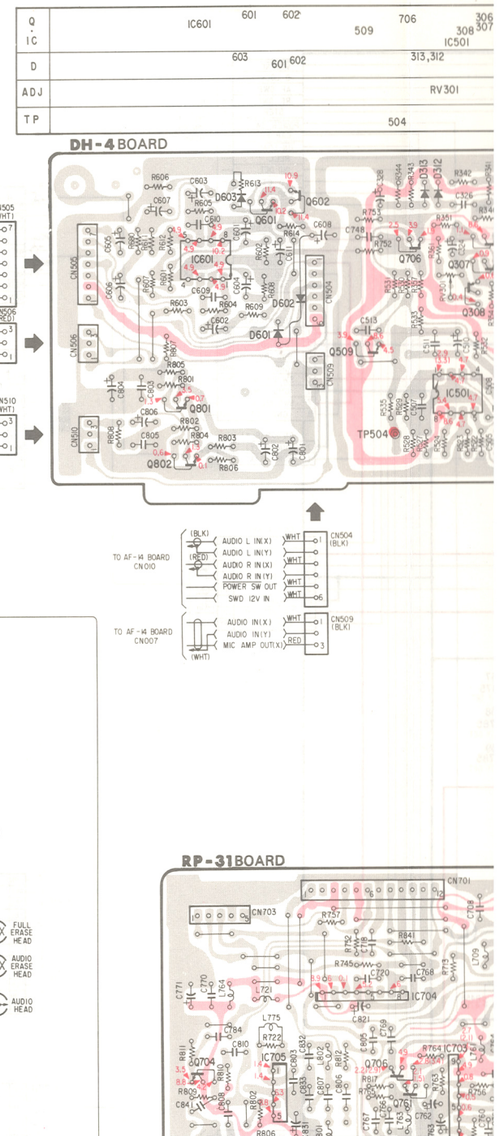

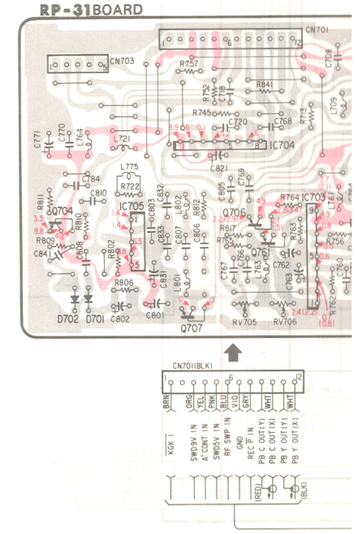

3 9 10 11 12 13 14 15 16 17 18 19 20 21 22 23 24

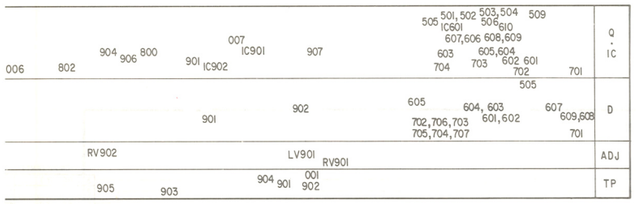

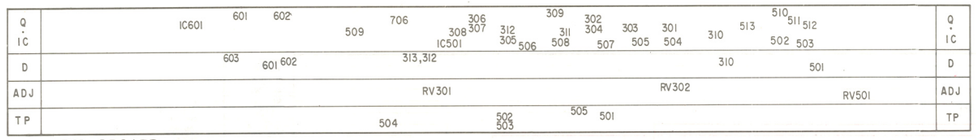

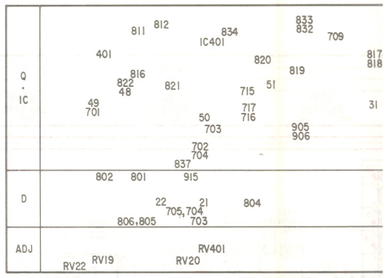

DH-4 BOARD

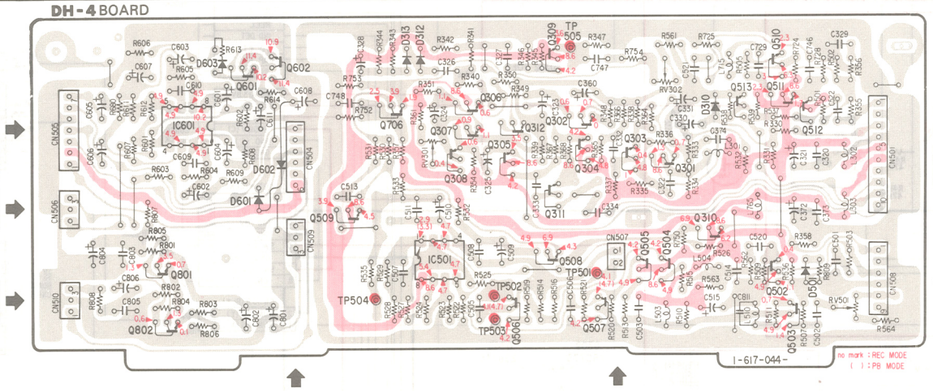

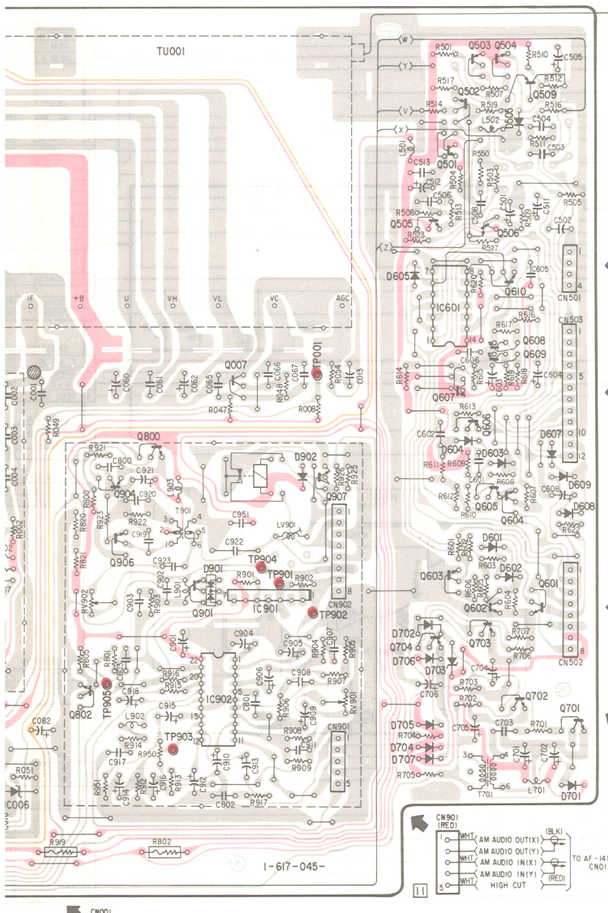

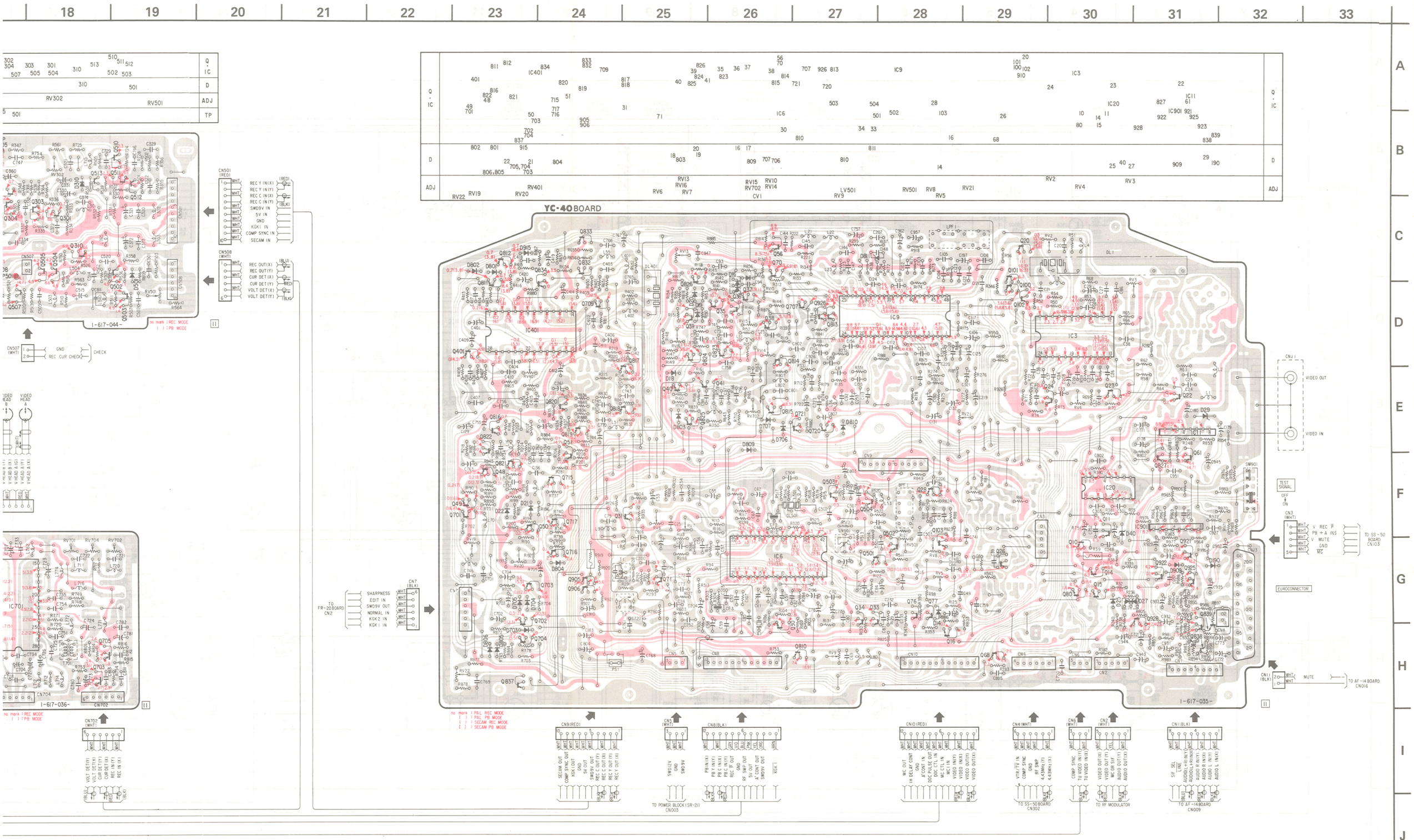
YC-40 BOARD
I-617-044-
I-617-036-
I-617-035-
VIDEO OUT
VIDEO IN
EUROCONNECTOR
TO POWER BLOCK (SR-21) CN003
TO SS-50 BOARD CN302
TO RF MODULATOR
TO AF-14 BOARD CN009
TO AF-14 BOARD CN016
TO SS-50 BOARD CN103
TO FR-20 BOARD CN2

4-4. SS-50 (SERVO, SYSTEM CONTROL), DR-33 (SYSTEM CONTROL, SIGNAL TRANSLATION), RD-17 (ROTATION DETECTOR), LM-17 (LOADING MOTOR), R STATOR (REEL MOTOR), CAPSTAN MOTOR SCHEMATIC DIAGRAMS

– Ref. No. SS-50 BOARD: 2,000 series, DR-33 BOARD: 9,300 series, RD-17 BOARD: 9,400 series, LM-17 BOARD: 9,400 series, R STATOR BOARD: 9,100 series, CAPSTAN MOTOR BOARD: 9,200 series –

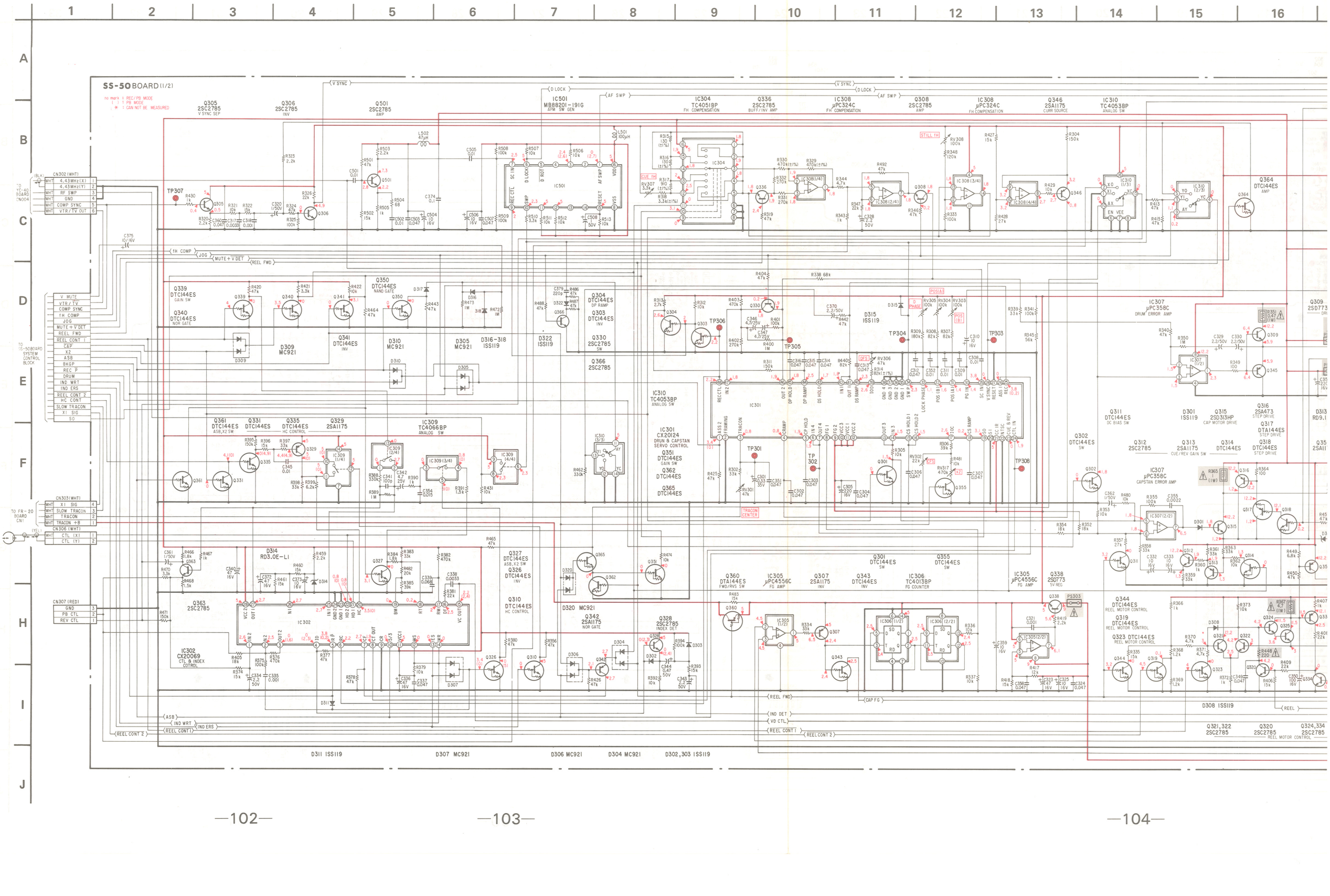

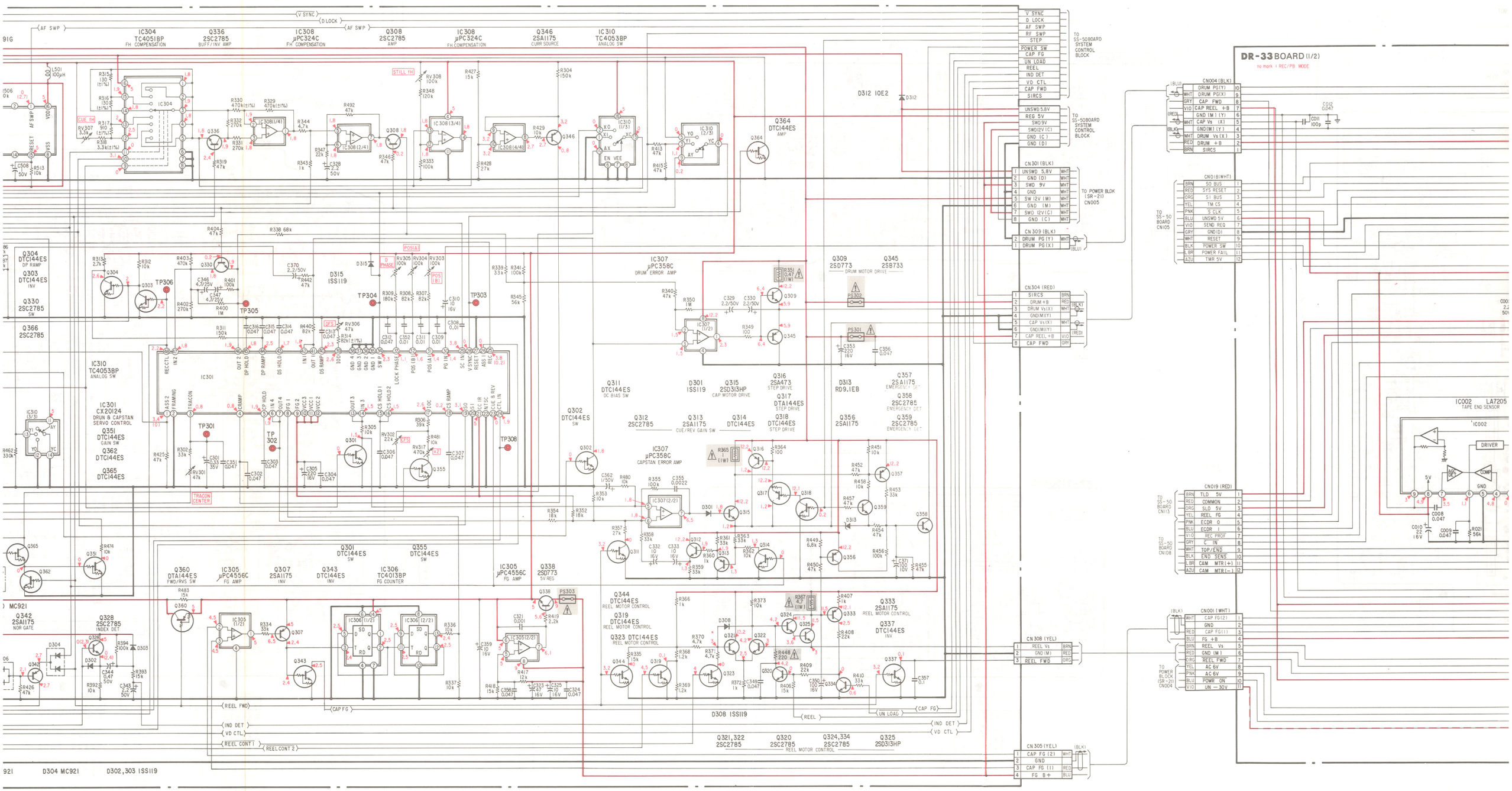
8
9
10
11
12
13
14
15
16
17
18
19
20
21
22
23
V SYNC
D LOCK
AF SWP
IC304 TC4051BP FH COMPENSATION
Q336 2SC2785 BUFF/INV AMP
IC308 µPC324C FH COMPENSATION
Q308 2SC2785 AMP
IC308 µPC324C FH COMPENSATION
Q346 2SA1175 CURR SOURCE
IC310 TC4053BP ANALOG SW
STILL FH
CUE FH
Q364 DTC144ES AMP
D312 10E2
TO SS-50BOARD SYSTEM CONTROL BLOCK
V SYNC
D LOCK
AF SWP
RF SWP
STEP
POWER SW
CAP FG
UN LOAD
REEL
IND DET
VD CTL
CAP FWD
SIRCS
UNSWD 5.8V
REG 5V
SWD 9V
SWD12V (C)
GND (C)
GND (D)
CN301 (BLK)
UNSWD 5.8V
GND (D)
SWD 9V
GND
SW 12V (M)
GND (M)
SWD 12V(C)
GND (C)
TO POWER BLOK (SR-21) CN005
CN309 (BLK)
DRUM PG(Y)
DRUM PG(X)
DR-33 BOARD (1/2)
no mark : REC/PB MODE
CN004 (BLK)
DRUM PG(Y)
DRUM PG(X)
CAP FWD
CAP REEL +B
GND (M) (Y)
CAP Vs (X)
GND(M) (Y)
DRUM Vs (X)
DRUM +B
SIRCS
CN018(WHT)
SO BUS
SYS RESET
SI BUS
TM CS
S CLK
UNSWD 5V
SEND REQ
GND(D)
RESET
POWER SW
POWER FAIL
TMR 5V
TO SS-50 BOARD CN105
Q304 DTC144ES DP RAMP
Q303 DTC144ES INV
Q330 2SC2785 SW
Q366 2SC2785
TP306
TP305
TP304
TP303
D315 ISS119
D PHASE
POS(A)
POS(B)
IC307 µPC358C DRUM ERROR AMP
Q309 2SD773
Q345 2SB733
DRUM MOTOR DRIVE
PS302
PS301
CN304 (RED)
SIRCS
DRUM +B
DRUM Vs(X)
GND(M)(Y)
CAP Vs(X)
GND(M)(Y)
CAP REEL +B
CAP FWD
IC310 TC4053BP ANALOG SW
IC301 CX20124 DRUM & CAPSTAN SERVO CONTROL
Q351 DTC144ES GAIN SW
Q362 DTC144ES
Q365 DTC144ES
TP301
TP 302
TP308
TRACON (CENTER
Q311 DTC144ES DC BIAS SW
D301 ISS119
Q315 2SD313HP CAP MOTOR DRIVE
Q316 2SA473 STEP DRIVE
Q317 DTA144ES STEP DRIVE
Q318 DTC144ES STEP DRIVE
D313 RD9.1EB
Q357 2SA1175 EMERGENCY DET
Q358 2SC2785 EMERGENCY DET
Q359 2SC2785 EMERGENCY DET
Q356 2SA1175
Q312 2SC2785
Q313 2SA1175 CUE/REV GAIN SW
Q314 DTC144ES
Q302 DTC144ES SW
IC307 µPC358C CAPSTAN ERROR AMP
IC002 LA7205 TAPE END SENSOR
DRIVER
AGC DET
COMP
CN019 (RED)
TLD 5V
COMMON
SLD 5V
REEL FG
ECDR 0
ECDR 1
REC PROF
C IN
TOP/END
END SENS
CAM MTR(+)
CAM MTR(-)
TO SS-50 BOARD CN113
TO SS-50 BOARD CN108
Q355 DTC144ES SW
Q301 DTC144ES SW
Q360 DTA144ES FWD/RVS SW
IC305 µPC4556C FG AMP
Q307 2SA1175 INV
Q343 DTC144ES INV
IC306 TC4013BP FG COUNTER
IC305 µPC4556C FG AMP
Q338 2SD773 5V REG
PS303
Q342 2SA1175 NOR GATE
Q328 2SC2785 INDEX DET
Q344 DTC144ES REEL MOTOR CONTROL
Q319 DTC144ES REEL MOTOR CONTROL
Q323 DTC144ES REEL MOTOR CONTROL
Q333 2SA1175 REEL MOTOR CONTROL
Q337 DTC144ES INV
D308 ISS119
Q321,322 2SC2785
Q320 2SC2785
Q324,334 2SC2785
Q325 2SD313HP
REEL MOTOR CONTROL
CN308 (YEL)
REEL Vs
GND (M)
REEL FWD
CN305 (YEL)
CAP FG (2)
GND
CAP FG (1)
FG B+
CN001 (WHT)
CAP FG(2)
GND
CAP FG(1)
FG +B
REEL Vs
GND (M)
REEL FWD
AC 6V
AC 6V
POWR ON
UN —30V
TO POWER BLOCK (SR-21) CN004
REEL FWD
IND DET
VD CTL
REEL CONT 1
REEL CONT 2
CAP FG
REEL
UN LOAD

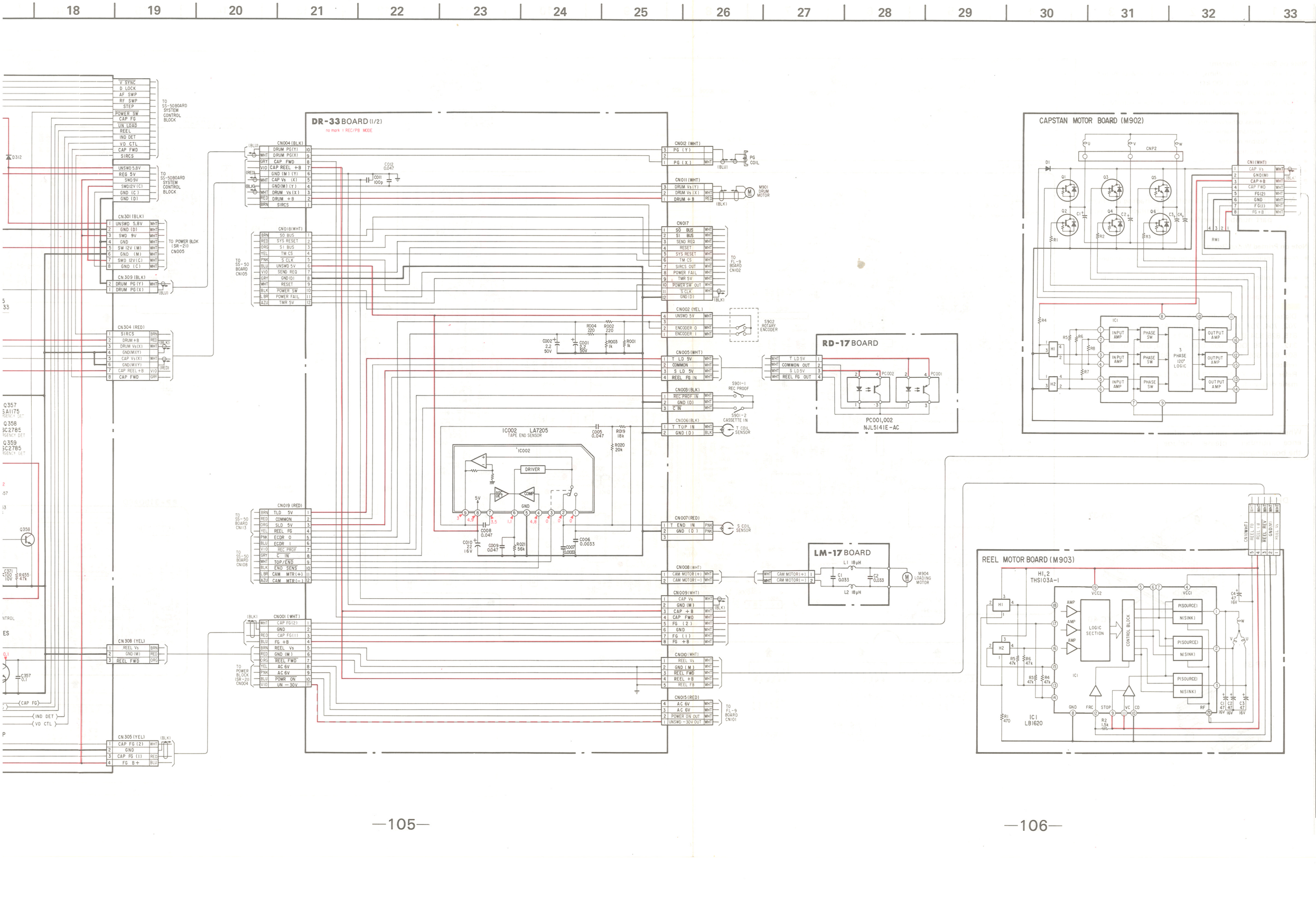
18
19
20
21
22
23
24
25
26
27
28
29
30
31
32
33
A
B
C
D
E
F
G
H
I
J
DR-33 BOARD (1/2)
no mark : REC/PB MODE
CN004 (BLK)
DRUM PG(Y)
DRUM PG(X)
CAP FWD
CAP REEL +B
GND (M) (Y)
CAP Vs (X)
GND(M) (Y)
DRUM Vs (X)
DRUM +B
SIRCS
CN018(WHT)
SO BUS
SYS RESET
SI BUS
TM CS
S CLK
UNSWD 5V
SEND REQ
GND(D)
RESET
POWER SW
POWER FAIL
TMR 5V
CN012 (WHT)
PG (Y)
PG (X)
PG COIL
CN011(WHT)
DRUM Vs(Y)
DRUM Vs(X)
DRUM +B
M901 DRUM MOTOR
CN017
SO BUS
SI BUS
SEND REQ
RESET
SYS RESET
TM CS
SIRCS OUT
POWER FAIL
TMR 5V
POWER SW OUT
S CLK
GND(D)
TO FL-9 BOARD CN102
CN002 (YEL)
UNSWD 5V
ENCODER O
ENCODER I
S902 ROTARY ENCODER
CN005(WHT)
T LD 5V
COMMON
S LD 5V
REEL FG IN
S901-1 REC PROOF
CN003(BLK)
REC PROF IN
GND (D)
C IN
S901-2 CASSETTE IN
CN006(BLK)
T TOP IN
GND (D)
T COIL SENSOR
IC002 LA7205
TAPE END SENSOR
DRIVER
REC DET
COMP
5V
GND
CN019 (RED)
TLD 5V
COMMON
SLD 5V
REEL FG
ECDR O
ECDR I
REC PROF
C IN
TOP/END
END SENS
CAM MTR(+)
CAM MTR(-)
CN007(RED)
T END IN
GND (D)
S COIL SENSOR
CN008(WHT)
CAM MOTOR(+)
CAM MOTOR(-)
LM-17 BOARD
L1 18μH
C1 0.033
C2 0.033
L2 18μH
M904 LOADING MOTOR
CN009(WHT)
CAP Vs
GND (M)
CAP +B
CAP FWD
FG (2)
GND
FG (1)
FG +B
CN001 (WHT)
CAP FG(2)
GND
CAP FG(1)
FG +B
REEL Vs
GND (M)
REEL FWD
AC 6V
AC 6V
POWER ON
UN — 30V
CN010(WHT)
REEL Vs
GND (M)
REEL FWD
REEL +B
REEL FB
CN015(RED)
AC 6V
AC 6V
POWER ON OUT
UNSWD -30V OUT
TO FL-9 BOARD CN101
RD-17 BOARD
T LD 5V
COMMON OUT
S LD 5V
REEL FG OUT
PC001
PC002
PC001,002
NJL5141E-AC
CAPSTAN MOTOR BOARD (M902)
CNP2
CN1(WHT)
CAP Vs
GND(M)
CAP+B
CAP(-B)
FG(2)
GND
FG(1)
FG+B
INPUT AMP
PHASE SW
3 PHASE 120° LOGIC
OUTPUT AMP
REEL MOTOR BOARD (M903)
HI,2 THS103A-I
LOGIC SECTION
CONTROL BLOCK
P(SOURCE)
N(SINK)
IC1 LB1620
TO SS-50BOARD SYSTEM CONTROL BLOCK
TO POWER BLOK (SR-21) CN005
TO SS-50 BOARD CN105
TO SS-50 BOARD CN113
TO SS-50 BOARD CN108
TO POWER BLOCK (SR-21) CN004
CN309 (BLK)
CN304 (RED)
CN308 (YEL)
CN305 (YEL)
CAP FG
IND DET
VD CTL

Note on Schematic Diagram:

- All resistors are in ohms, 1/6 W unless otherwise noted. kΩ: 1000 Ω, MΩ: 1000 kΩ
- All capacitors are in μF unless otherwise noted. p: μμF 50WV or less are not indicated except for electrolytics.
- All variable and adjustable resistors have characteristic curve B, unless otherwise noted.
- : nonflammable resistor.
- : fusible resistor.
- The red lines show the main voltages.
- All voltages are dc measured with a VOM (10 MΩ).
- : B+ bus.
- : B– bus.

Note: The components identified by shading and mark ⚠ are critical for safety. Replace only with part number specified.

Note on Printed Wiring Board:

- : Indicates a leadwire mounted on the component side.
- : Indicates a leadwire mounted on the printed side.
- : soldering side.
- : B+ pattern
- : B– pattern
- : component side.
- Digital transistor (SS-50: Q101, 102, 103, 104, 105, 109, 111, 112, 301, 302, 303, 304, 310, 311, 314, 317, 318, 319, 323, 326, 327, 331, 335, 337, 339, 340, 341, 343, 344, 350, 351, 352, 353, 354, 355, 360, 361, 362, 364, 365, 612, 613, 614) transistors with resistors.
  Refer to the SS-50 baord schematic diagram for digital transistor.

When indicating parts by reference number, please include the board name.

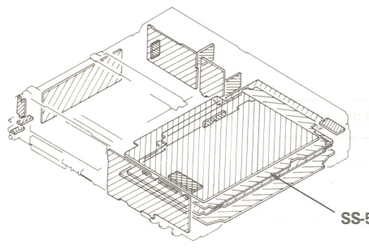

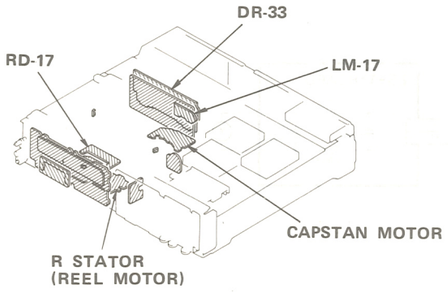

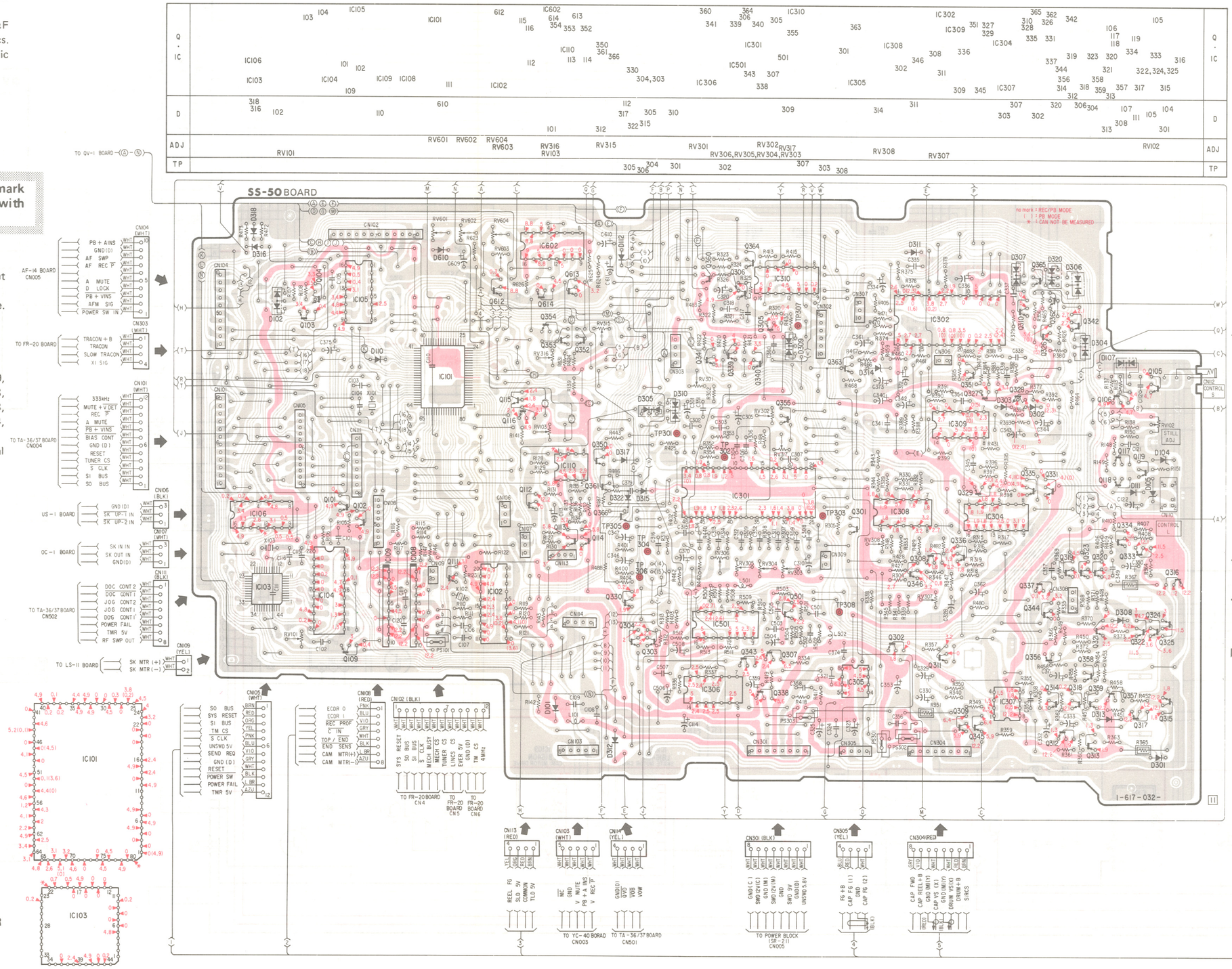

TATION DETECTOR), LM-17 (LOADING MOTOR), R STATOR (REEL MOTOR), CAPSTAN MOTOR PRINTED WIRING BOARDS

R STATOR BOARD: 9,100 series, CAPSTAN MOTOR BOARD: 9,200 series –

7 | 8 | 9 | 10 | 11 | 12 | 13 | 14 | 15 | 16 | 17 | 18 | 19 | 20 | 21 | 22 | 23

A B C D E F G H I J

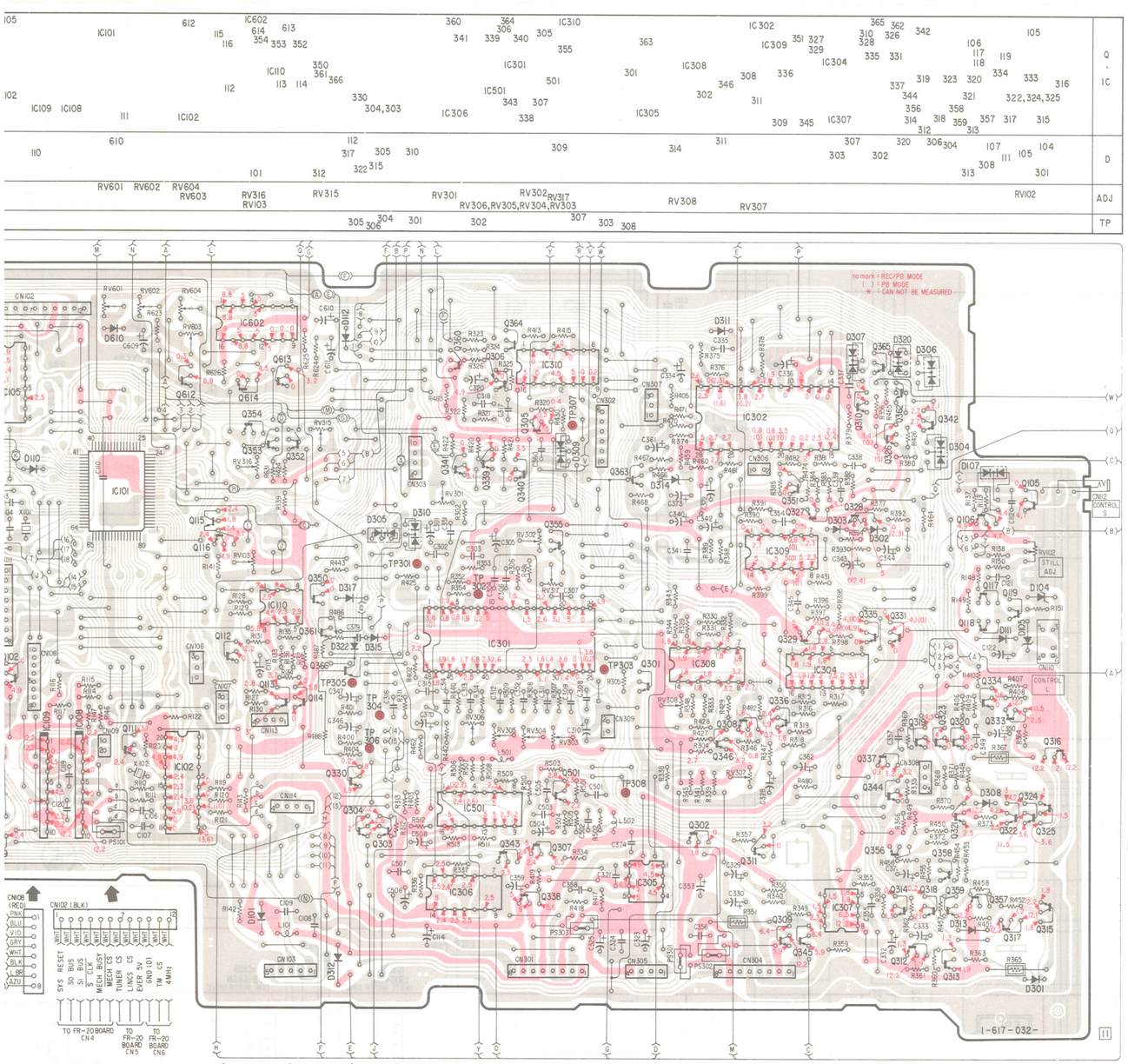

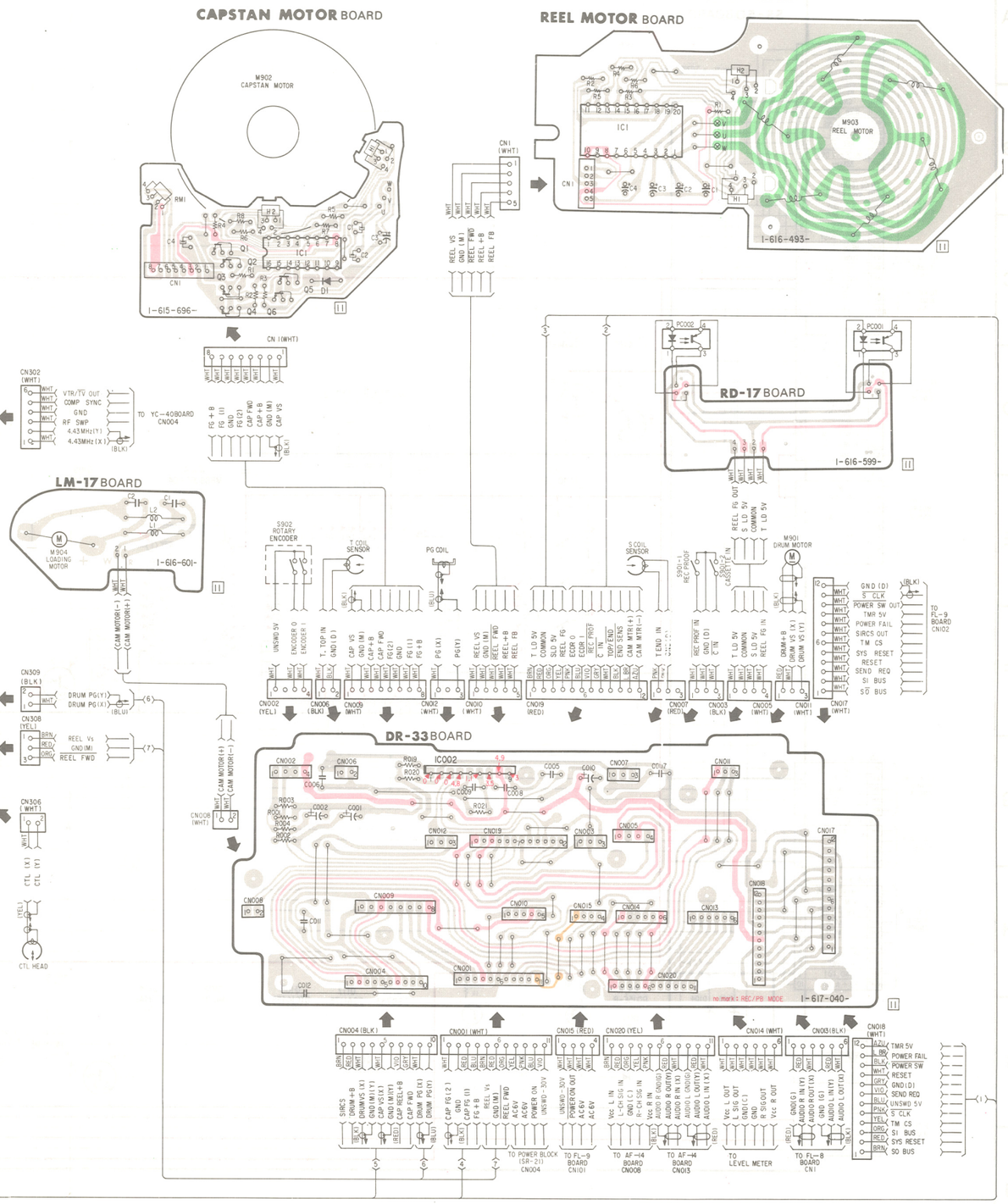

4-5. SS-50 (SERVO, SYSTEM CONTROL), QV-1 (SYSTEM CONTROL), OC-1 (SKIP SWITCH), US-1 (SKIP SWITCH), LS-11 (SKATE MOTOR) SCHEMATIC DIAGRAM

– Ref. No. SS-50 BOARD: 2,000 series, QV-1 BOARD: 8,000 series, OC-1 BOARD: 9,500 series, US-1 BOARD: 9,500 series, LS-11 BOARD: 9,500 series –

SS-50 BOARD (1/2)

no mark : REC/PB MODE
( ) PB MODE
* CAN NOT BE MEASURED

CN101 (WHT)
SO BUS 1
SI BUS 2
S CLK 3
TUNER CS 4
RESET 5
GND (D) 6
BIAS CONT 7
PB + V INS 8
A MUTE 9
REC P 10
MUTE + V DET 11
333kHz 12
TO TA-36/37 BOARD CN004

CN102 (BLK)
SYS RESET 1
SO BUS 2
SI BUS 3
S CLK 4
MECH BUSY 5
MECH CS 6
TUNER CS 7
LINCS CS 8
EVER 5V 9
GND (D) 10
TM CS 11
4MHz 12
TO FR-20 BOARD CN 4
TO FR-20 BOARD CN 5
TO FR-20 BOARD CN 6

CN105 (WHT)
SO BUS 1
SYS RESET 2
SI BUS 3
TM CS 4
S CLK 5
UNSW5V 6
SEND REQ 7
GND (D) 8
RESET 9
POWER SW 10
POWER FAIL 11
TM 5V 12
TO DR-33 BOARD CN018

CN111 (BLK)
RF SWP OUT 7
TMR 5V 8
POWER FAIL 6
DOC CONT 1' 5
JOG CONT 1 4
JOG CONT 2 3
DOC CONT 1 2
DOC CONT 2 1
TO TA-36/37 BOARD CN502

CN103 (WHT)
MC 5
GND (D) 4
V MUTE 3
PB + A INS 2
V REC P 1
TO YC-40 BOARD CN003

CN114 (YEL)
VOW 1
VOB 2
OVD 3
GND (D) 4
TO TA-36/37 BOARD CN501

CN104 (WHT)
POWER SW IN 1
AFM SIG 2
PB + V INS 3
D LOCK 4
A MUTE 5
6
AF REC P 7
AF SWP 8
GND (D) 9
PB + A INS 10
TO AF-14 BOARD CN005

CN110
GND 5
4
POWER SW IN 3
2
DC OUT 1
CONTROL L

CN113 (RED)
T LD 5V 1
COMMON 2
S LD 5V 3
REEL FG 4
TO DR-33 BOARD CN019

Q101 DTC144ES INV
Q102 DTA144ES INV
IC103 μPD7508HG-537-22 CRT CONTROL
IC106 TC4053BP MULTPLEXER
IC104 MB89005-104 CHARA GEN
Q109 DTC144ES INV
IC101 MB88551-173M MECHANISM CONTROL
IC102 M50761-696P INDEX WRITE CONTROL
D110 ISS119
D112 ISS119
IC105 MSM6411B-19RS LINCS CONTROL
D101 10E2
D104,105 RD15E-B
D111 11E2
Q118 2SD733
Q117 2SA1175
Q103 DTC144ES INV
D102 MC911
Q104 DTC144ES INV
Q119 2SA1175
Q111 DTC144ES INV
Q112 DTC144ES LED SW
Q113 2SC2785 S/T SW
Q114 2SC2785 S/T SW
IC110 μPC358C REEL FG AMP
IC108 LB1640N SKATE MOTOR DRIVE
IC109 LB1640N CAM MOTOR DRIVE
IC602 TC4053BP fH COMPENSATION
Q106 2SA1175 WIRELESS WIRED SW
Q115 2SC2785 SW
Q116 2SC2785 BUFF
Q353 DTC144ES SW
Q354 DTC144ES FWD/RVS SW
Q614 DTC144ES
Q613 DTC144ES fH COMPENSATION
Q612 DTC144ES
PS101
X101 4MHz
X102 800kHz
X103 4MHz

P SWITCH), LS-11 (SKATE MOTOR) SCHEMATIC DIAGRAM

es, LS-11 BOARD: 9,500 series –

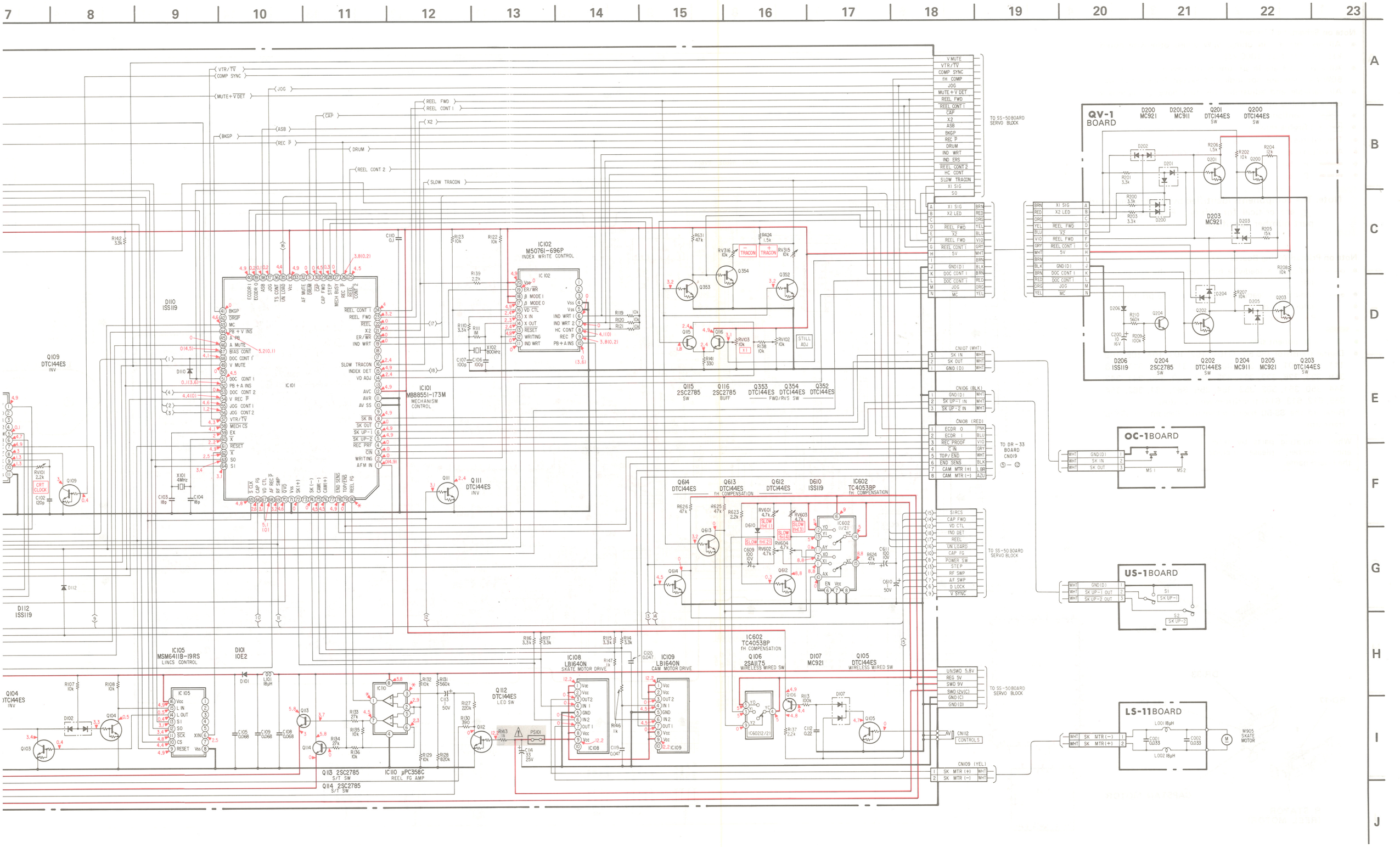

Note on Schematic Diagram:

- All resistors are in ohms, 1/6W unless otherwise noted. kΩ: 1000 Ω, MΩ: 1000 kΩ
- All capacitors are in μF unless otherwise noted. p: μμF 50WV or less are not indicated except for electrolytics.
- All variable and adjustable resistors have characteristic curve B, unless otherwise noted.
- : nonflammable resistor.
- : fusible resistor.
- The red lines show the main voltages.
- All voltages are dc measured with a VOM (10 MΩ).
- : B+ bus.

Note: The components identified by shading and mark ⚠ are critical for safety. Replace only with part number specified.

Note on Printed Wiring Board:

- : Indicates a leadwire mounted on the component side.
- : Indicates a leadwire mounted on the printed sied.
- : soldering side.
- : B+ pattern
- Digital transistor (SS-50: Q101, 102, 103, 104, 105, 109, 111, 112, 301, 302, 303, 304, 310, 311, 314, 317, 318, 319, 323, 326, 327, 331, 335, 337, 339, 340, 341, 343, 344, 350, 351, 352, 353, 354, 355, 360, 361, 362, 364, 365, 612, 613, 614. QV-1: Q200, 201, 202, 203) transistors with resistors.
  Refer to the SS-50 and QV-1 boards schematic diagram for digital transistor.

When indicating parts by reference number, please include the board name.

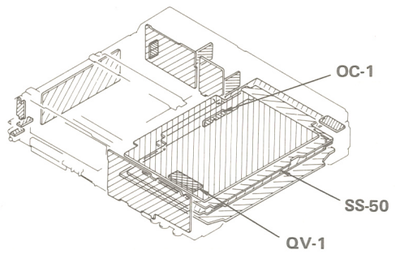

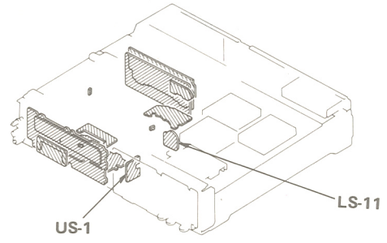

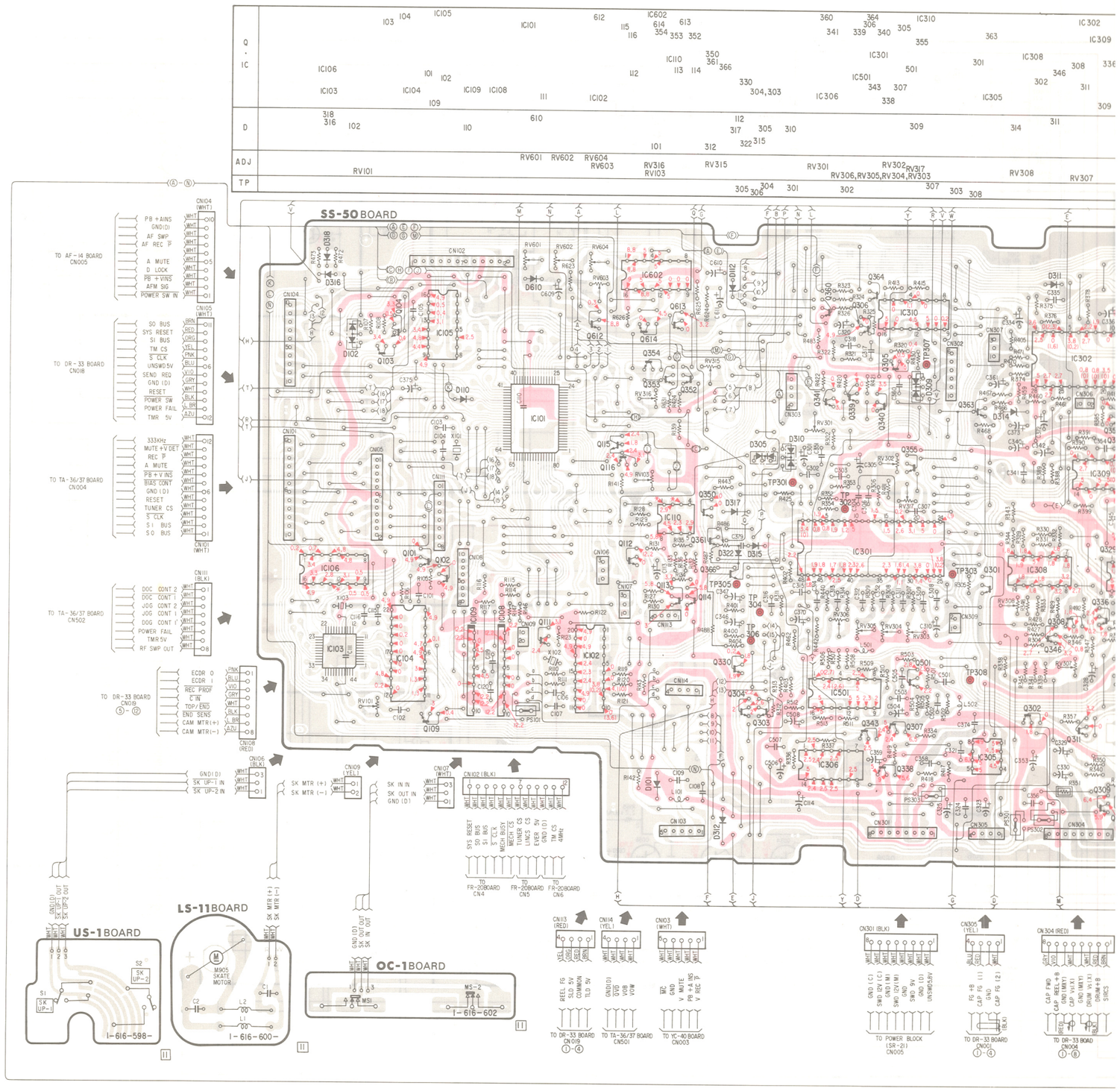

11 12 13 14 15 16 17 18 19 20 21 22 23 24 25 26

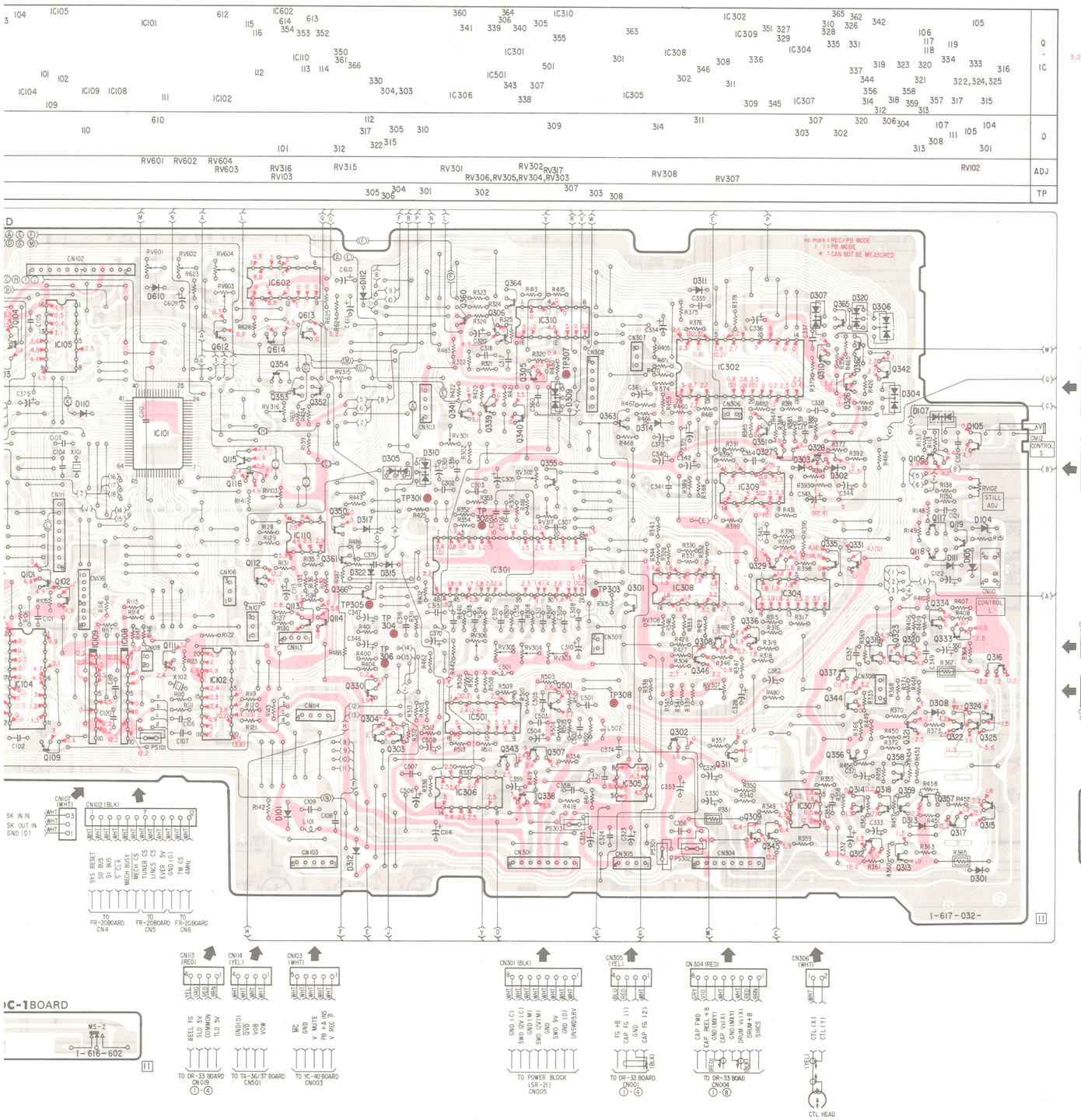

18 19 20 21 22 23 24 25 26 27 28 29 30 31 32 33

A B C D E F G H I J

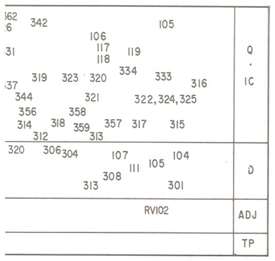

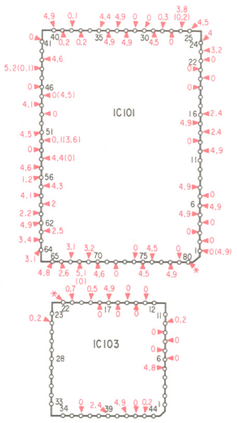

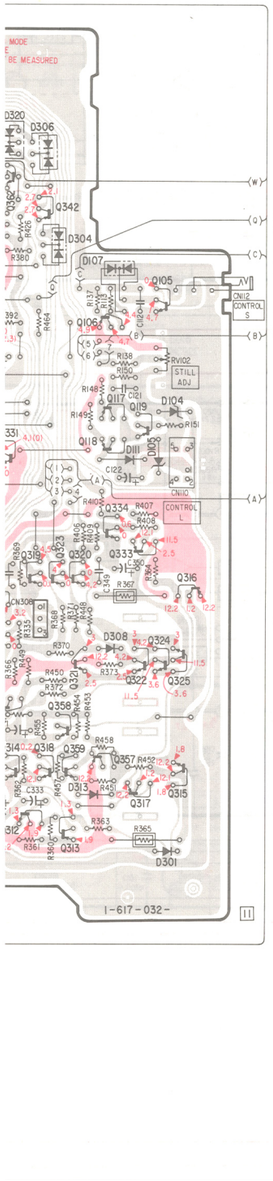

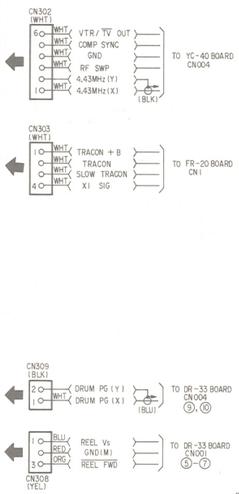

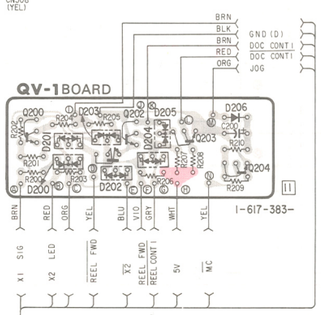

SS-50 BOARD

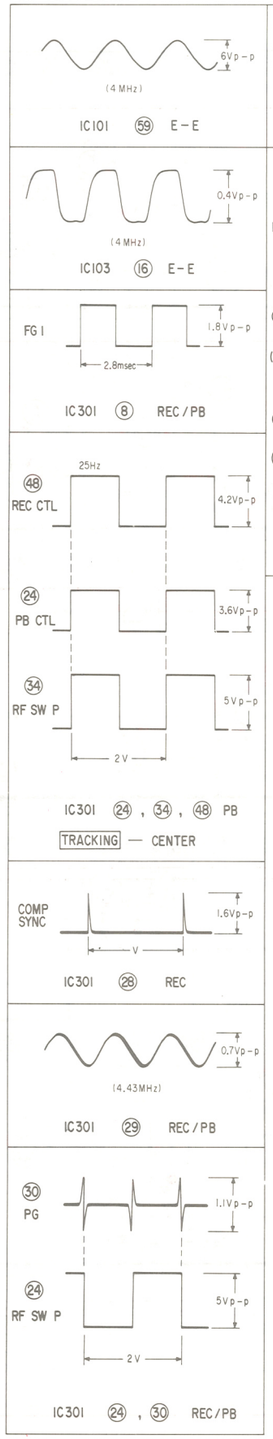

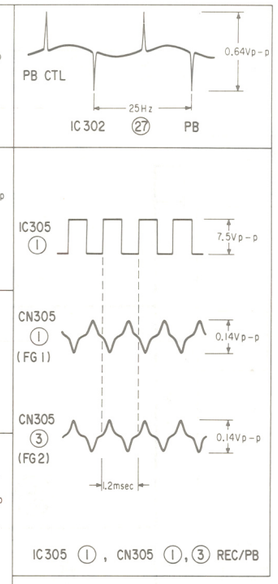

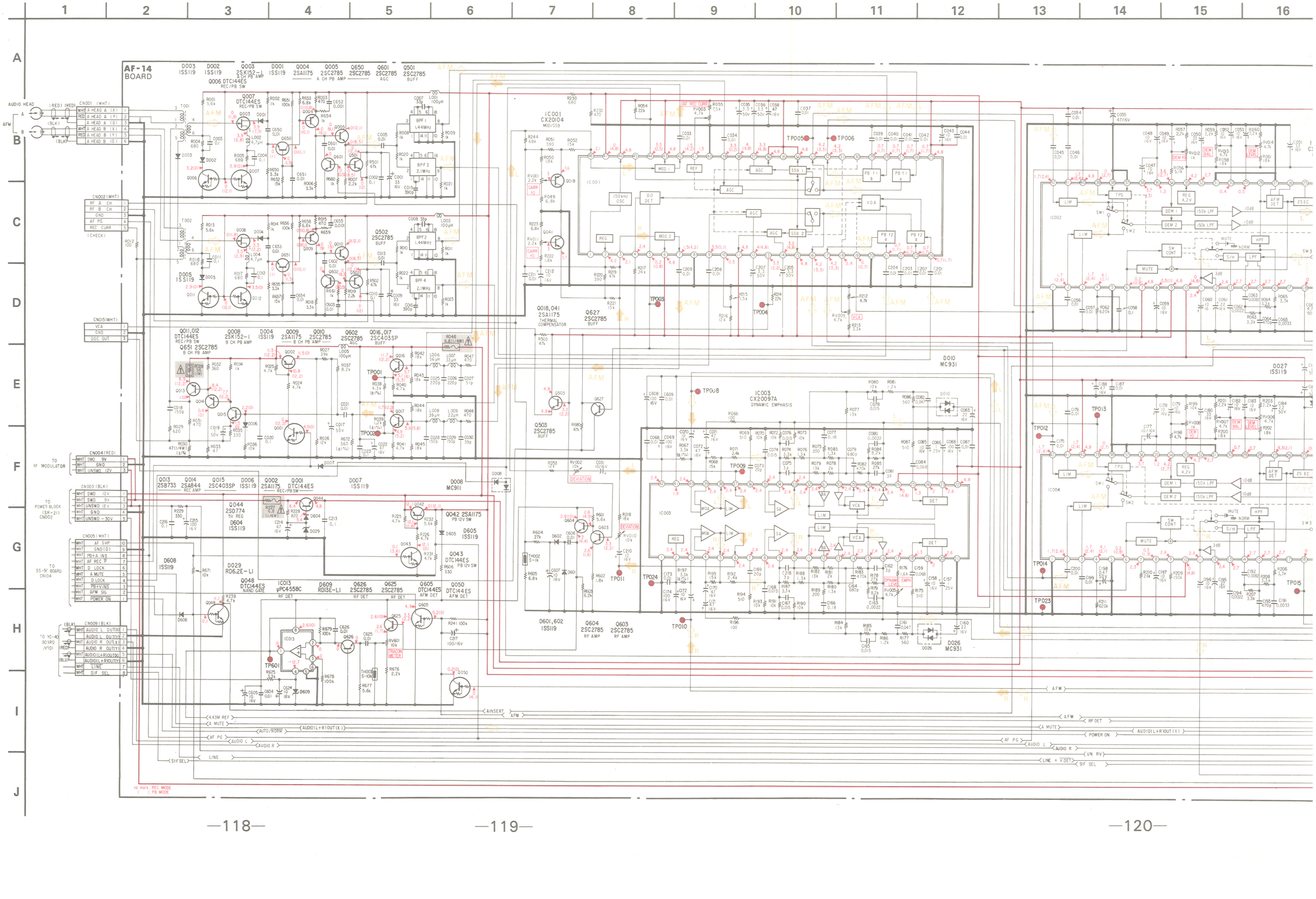
AF-14 BOARD
1
2
3
4
5
6
7
8
9
10
11
12
13
14
15
16
A
B
C
D
E
F
G
H
I
J
AUDIO HEAD
AFM
CN001 (WHT)
CN002 (WHT)
CN003 (BLK)
CN004 (RED)
CN005 (WHT)
CN009 (BLK)
TO RF MODULATOR
TO POWER BLOCK (SR-211) CN002
TO SS-5K BOARD CN104
TO YC-40 BOARD JW01
IC001 CX20104 MOD/SSB
IC002
IC003 CX20097A DYNAMIC EMPHASIS
IC004
IC013 μPC4558C
Q001 DTC144ES REC/PB SW
Q002 2SA1175
Q003 2SK152-L A CH PB AMP
Q004 2SA1175
Q005 2SC2785 A CH PB AMP
Q006 DTC144ES REC/PB SW
Q007 DTC144ES REC/PB SW
Q008 2SK152-L B CH PB AMP
Q009 2SA1175
Q010 2SC2785
Q011,012 DTC144ES REC/PB SW
Q013 2SB733
Q014 2SA844 REC AMP
Q015 2SC403SP
Q016,017 2SC403SP BUFF
Q018,041 2SA1175 THERMAL COMPENSATOR
Q043 DTC144ES PB 12V SW
Q044 2SD774 5V REG
Q048 DTC144ES NAND GATE
Q050 DTC144ES AFM DET
Q501 2SC2785 BUFF
Q502 2SC2785 BUFF
Q503 2SC2785 BUFF
Q601 2SC2785 AGC
Q602 2SC2785 AGC
Q603 2SC2785 RF AMP
Q604 2SC2785 RF AMP
Q605 DTC144ES AFM DET
Q626 2SC2785 RF DET
Q627 2SC2785 BUFF
D001 ISS119
D002 ISS119
D003 ISS119
D004 ISS119
D005 ISS119
D007 ISS119
D008 MC911
D010 MC931
D026 MC931
D027 ISS119
D029 RD6.2E-L1
D604 ISS119
D605 ISS119
D608 ISS119
D609 RD13E-L1
BPF 1 1.44MHz
BPF 2 1.44MHz
BPF 3 2.1MHz
BPF 4 2.1MHz
150kHz OSC
D.O DET
MOD 1
MOD 2
SSB 1
SSB 2
PB f1 a
PB f1 b
PB f2 a
PB f2 b
VCA
REG
AGC
REF
CARR fo
TPG
LIM
SW1
SW2
DEM 1
DEM 2
150k LPF
10dB
AFM DET
25 EC
SW CONT
S/H
LPF
HPF
MUTE
NORM
3dB
34dB
TP001
TP002
TP003
TP004
TP005
TP006
TP007
TP008
TP009
TP010
TP011
TP012
TP013
TP014
TP015
TP023
TP024
TP601
TRIGGON METER
DYNAMIC EMPH LEVEL
DEVIATION
AUTO/NORM
AUDIO L
AUDIO R
AUDIO(L+R)OUT(X)
AF PG
A MUTE
AINSERT
4.43M REF
SIF SEL
LINE
POWER ON
UN RV
LINE + V.DET
RF DET
AFM
no mark : REC MODE
( ) : PB MODE

8 | 9 | 10 | 11 | 12 | 13 | 14 | 15 | 16 | 17 | 18 | 19 | 20 | 21 | 22 | 23 | 24

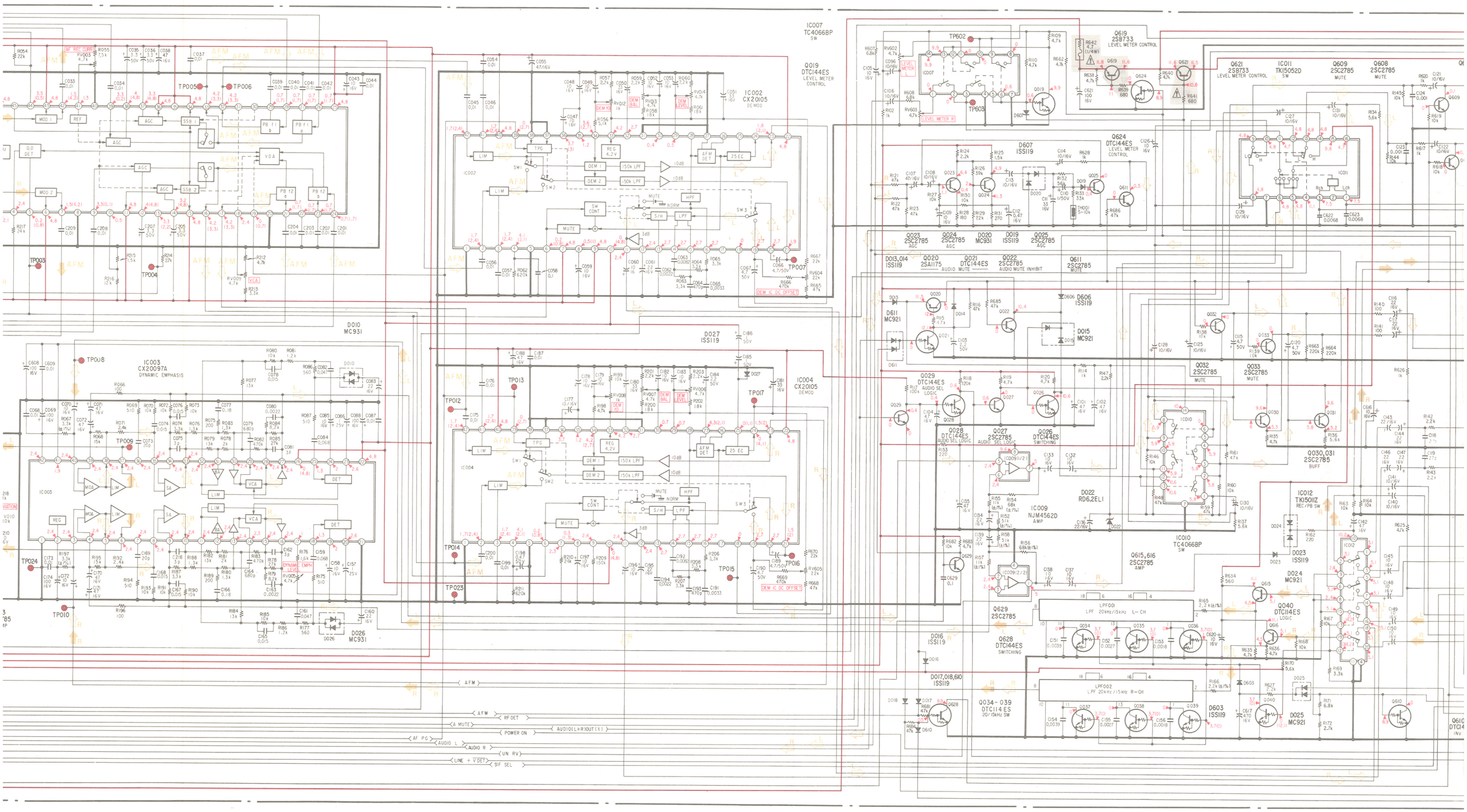

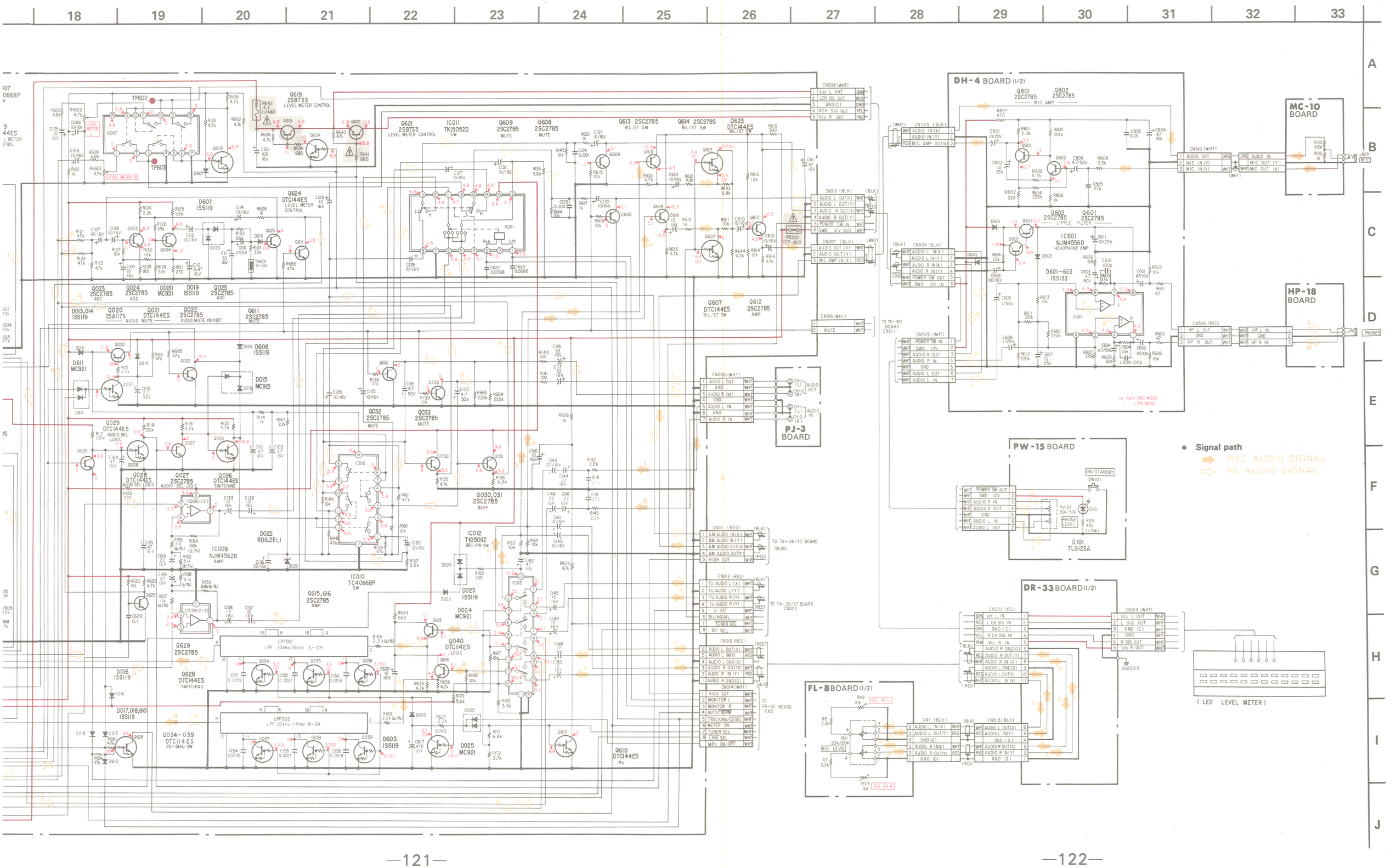
18 19 20 21 22 23 24 25 26 27 28 29 30 31 32 33
A B C D E F G H I J
DH-4 BOARD (1/2)
Q801 2SC2785 MIC AMP
Q802 2SC2785
Q602 2SC2785 LIPPLE FILTER
Q601 2SC2785
IC601 NJM4556D HEADPHONE AMP
D601-603 1SS133
MC-10 BOARD
HP-18 BOARD
PJ-3 BOARD
PW-15 BOARD
DR-33 BOARD (1/2)
FL-8 BOARD (1/2)
D101 TLG123A
(LED LEVEL METER)
CHASSIS
TO YC-40 BOARD CN01
TO TA-36/37 BOARD CN901
TO TA-36/37 BOARD CN002
TO FR-20 BOARD CN3
Q619 2SB733 LEVEL METER CONTROL
Q621 2SB733 LEVEL METER CONTROL
IC011 TK15052D SW
Q609 2SC2785 MUTE
Q608 2SC2785 MUTE
Q613 2SC2785 BIL/ST SW
Q614 2SC2785 BIL/ST SW
Q623 DTC144ES BIL/ST SW
Q624 DTC144ES LEVEL METER CONTROL
D607 1SS119
Q607 DTC144ES BIL/ST SW
Q612 2SC2785 AMP
Q023 2SC2785 AGC
Q024 2SC2785 AGC
Q020 2SA1175 AUDIO MUTE
Q021 DTC144ES AUDIO MUTE
Q022 2SC2785 AUDIO MUTE INHIBIT
Q611 2SC2785 MUTE
D020 MC931
D019 1SS119
Q025 2SC2785 AGC
D013,014 1SS119
D611 MC921
Q029 DTC144ES AUDIO SEL LOGIC
Q028 DTC144ES AUDIO SEL LOGIC
Q027 2SC2785 AUDIO SEL LOGIC
Q026 DTC144ES SWITCHING
Q032 2SC2785 MUTE
Q033 2SC2785 MUTE
Q030,031 2SC2785 BUFF
IC009 NJM4562D AMP
IC010 TC4066BP SW
IC012 TK15011Z REC/PB SW
D022 RD6.2ELI
D023 1SS119
D024 MC921
Q615,616 2SC2785 AMP
Q629 2SC2785
Q628 DTC144ES SWITCHING
Q034-039 DTC114ES 20/15kHz SW
Q040 DTC114ES LOGIC
D016 1SS119
D017,018,610 1SS119
D603 1SS119
D025 MC921
Q610 DTC144ES INV
LPF001 LPF 20kHz/15kHz L-CH
LPF002 LPF 20kHz/15kHz R-CH
CN008 (WHT)
CN010 (BLK)
CN007 (BLK)
CN016 (WHT)
CN006 (WHT)
CN011 (RED)
CN012 (RED)
CN013 (RED)
CN014 (WHT)
CN509 (BLK)
CN504 (BLK)
CN505 (WHT)
CN510 (WHT)
CN506 (RED)
CN020 (YEL)
CN014 (WHT)
CN1 (BLK)
CN013 (BLK)
PS001 (CP-N10)
Signal path
REC AUDIO SIGNAL
PB AUDIO SIGNAL

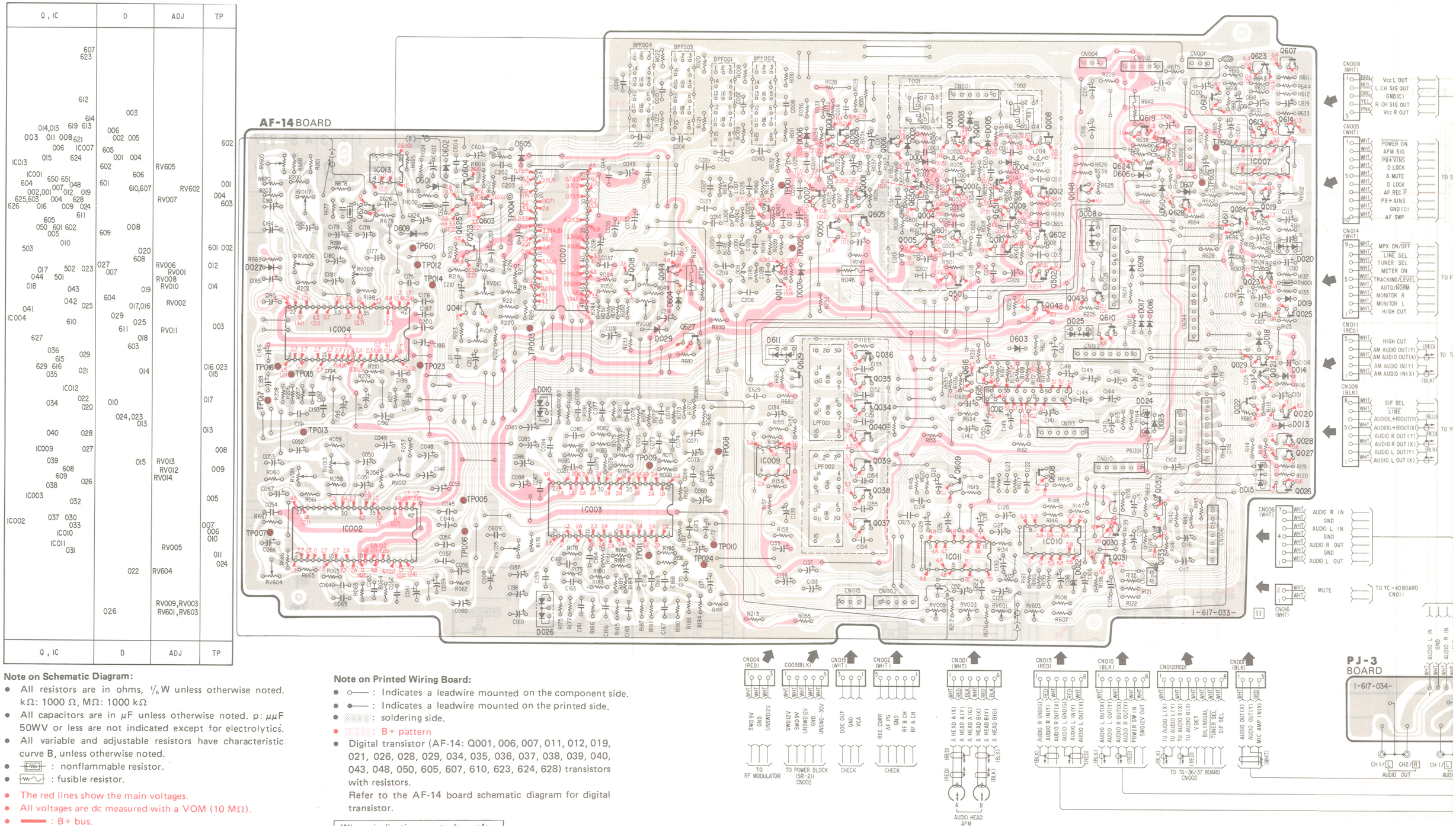

Note on Schematic Diagram:

- All resistors are in ohms, 1/6W unless otherwise noted. kΩ: 1000 Ω, MΩ: 1000 kΩ
- All capacitors are in μF unless otherwise noted. p: μμF 50WV or less are not indicated except for electrolytics.
- All variable and adjustable resistors have characteristic curve B, unless otherwise noted.
- : nonflammable resistor.
- : fusible resistor.
- The red lines show the main voltages.
- All voltages are dc measured with a VOM (10 MΩ).
- : B+ bus.

Note: The components identified by shading and mark ⚠ are critical for safety. Replace only with part number specified.

Note on Printed Wiring Board:

- ○—— : Indicates a leadwire mounted on the component side.
- ●—— : Indicates a leadwire mounted on the printed side.
- : soldering side.
- : B+ pattern
- Digital transistor (AF-14: Q001, 006, 007, 011, 012, 019, 021, 026, 028, 029, 034, 035, 036, 037, 038, 039, 040, 043, 048, 050, 605, 607, 610, 623, 624, 628) transistors with resistors.
  Refer to the AF-14 board schematic diagram for digital transistor.

When indicating parts by reference number, please include the board name.

15 16 17 18 19 20 21 22 23 24 25 26 27 28 29 30

A B C D E F G H I J

Q. IC	IC601 601 602 509 706 308 307 306 IC501 312 305 506 309 311 508 302 304 507 303 505 301 504 310 510 511 502 503	Q. IC
D	603 601 602 313,312 310 501	D
ADJ	RV301 RV302 RV501	ADJ
TP	504 502 503 505 501	TP

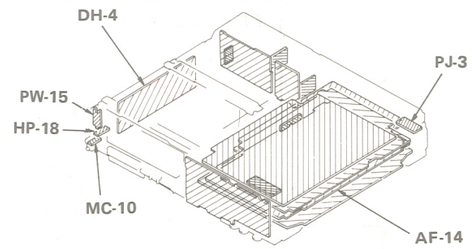

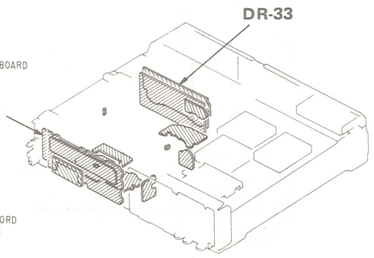

DH-4 BOARD

CN008 (WHT): Vcc L OUT, L CH SIG OUT, GND(C), R CH SIG OUT, Vcc R OUT

CN005 (WHT): POWER ON, AFM SIG, PB+VINS, D LOCK, A MUTE, D LOCK, AF REC P, PB+AINS, GND (D), AF SWP — TO SS-50 BOARD CN104

CN014 (WHT): MPX ON/OFF, LINE SEL, TUNER SEL, METER ON, TRACKING/LEVEL, AUTO/NORM, MONITOR R, MONITOR L, HIGH CUT — TO FR-20 BOARD CN3

CN011 (RED): HIGH CUT, AM AUDIO OUT(Y), AM AUDIO OUT(X), AM AUDIO IN(Y), AM AUDIO IN(X) — TO TA-36/37 BOARD CN901

CN009 (BLK): SIF SEL, LINE, AUDIOL+RIOUT(Y), AUDIOL+RIOUT(X), AUDIO R OUT(Y), AUDIO R OUT(X), AUDIO L OUT(Y), AUDIO L OUT(X) — TO YC-40 BOARD CN001

CN505: AUDIO L IN, AUDIO L OUT, GND, AUDIO R IN, AUDIO R OUT, SWD12V, POWER SW IN

CN506 (RED): HP R OUT, GND, HP L OUT

CN510 (WHT): MIC IN (X), MIC IN (Y), AUDIO OUT

CN501 (RED): REC Y IN(X), REC Y IN(Y), REC C IN(X), REC C IN(Y), SWD9V IN, SWD5V IN, GND, COMP SYNC IN, SECAM IN — TO YC-40 BOARD CN9

CN508 (WHT): REC OUT(X), REC OUT(Y), CUR DET(X), CUR DET(Y), VOLT DET(X), VOLT DET(Y) — TO RP-31 BORD CN702

I-617-044- (11)

no mark : REC MODE
( ) : PB MODE

CN509 (BLK): AUDIO IN(X), AUDIO IN(Y), MIC AMP OUT(X)

CN504 (BLK): AUDIO L IN(X), AUDIO L IN(Y), AUDIO R IN(X), AUDIO R IN(Y), POWER SW OUT, SWD12V IN

CN507 (WHT): GND, REC CUR CHECK — CHECK

MC-10 BOARD: J901 (MIC); MIC OUT (X), MIC OUT (Y), AUDIO IN; R102, R103; I-617-043- (11)

HP-18 BOARD: J001 (PHONES); HP R IN, GND, HP L IN; I-617-042- (11)

PW-15 BOARD: POWER SW OUT, SWD 12 IN, AUDIO R OUT, AUDIO R IN, GND, AUDIO L IN, AUDIO L OUT; D101, R101, SW101 (ON/STANDBY), RV101 (PHONE LEVEL); I-617-041- (11)

CN016 (WHT): MUTE — TO YC-40 BOARD CN011

PJ-3 BOARD: AUDIO L IN, GND, AUDIO R IN, GND, AUDIO L OUT, GND, AUDIO R OUT; I-617-034-; CH1/L CH2/R AUDIO OUT; CH1/L CH2/R AUDIO IN

DR-33 BOARD

CN014 (WHT): Vcc L OUT, L SIG OUT, GND (C), GND, R SIG OUT, Vcc R OUT; CHASSIS

(LED LEVEL METER)

CN020 (YEL): Vcc L IN, L CH SIG IN, GND (C), R CH SIG IN, Vcc R IN, AUDIO R GND(G), AUDIO R OUT(Y), AUDIO R IN(X), AUDIO L GND(G), AUDIO L OUT(Y), AUDIO L IN(X)

CN013 (BLK): GND (G), AUDIO R IN(Y), AUDIO R OUT(X), GND (G), AUDIO L IN(Y), AUDIO L OUT(X)

CN1 (BLK): GND (G), AUDIO R OUT (Y), AUDIO R IN (X), GND (G), AUDIO L OUT (Y), AUDIO L IN (X)

FL-8 BOARD: RV3, R7, RV1 (REC LEVEL), R6, RV2

4-7. FL-8 (INDICATOR), FL-9 (TIMER CONTROL), FR-20 (FUNCTION SWITCH) SCHEMATIC DIAGRAMS

– Ref. No. FL-8 BOARD: 9,600 series, FL-9 BOARD: 9,700 series, FR-20 BOARD: 9,800 series –

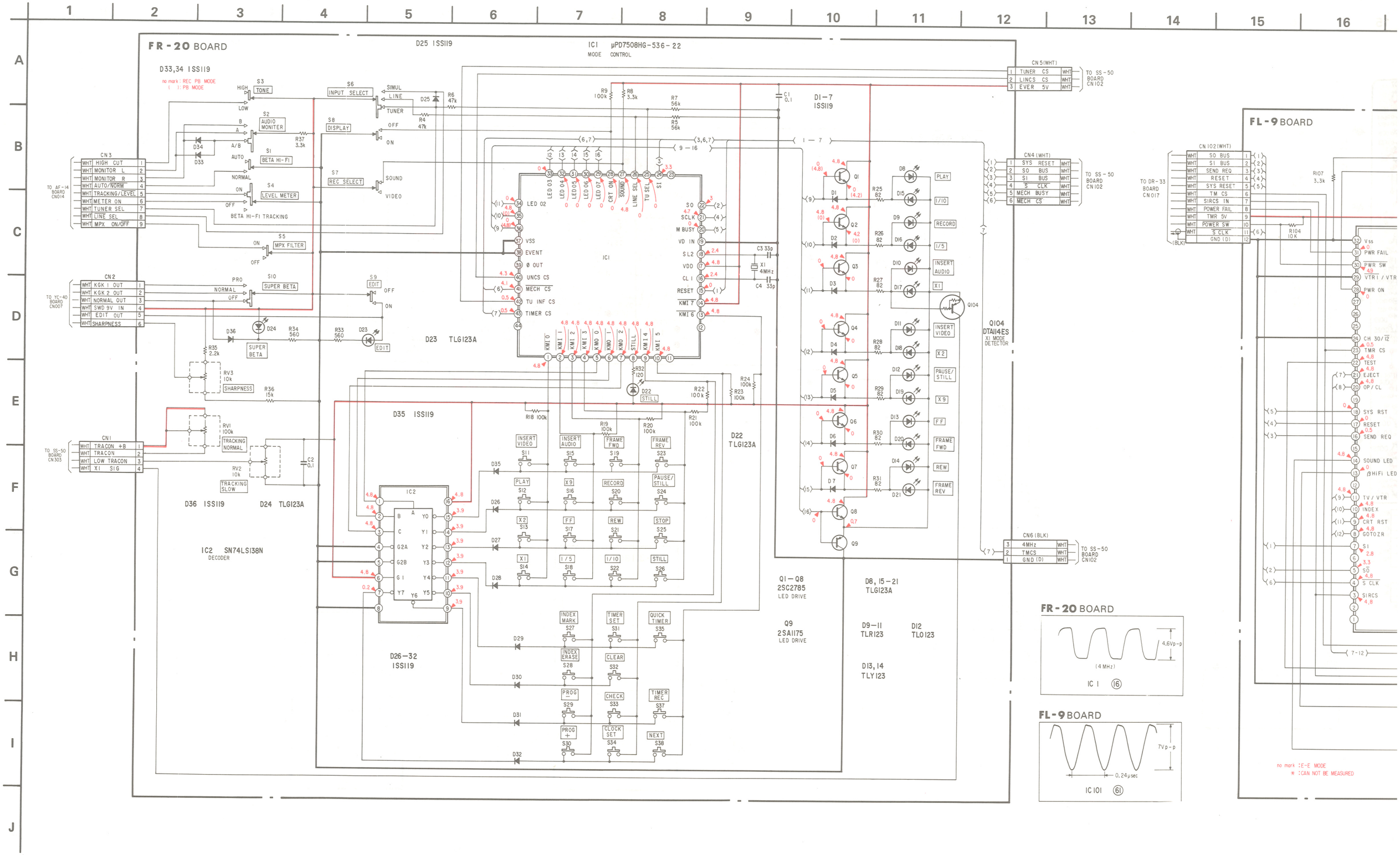

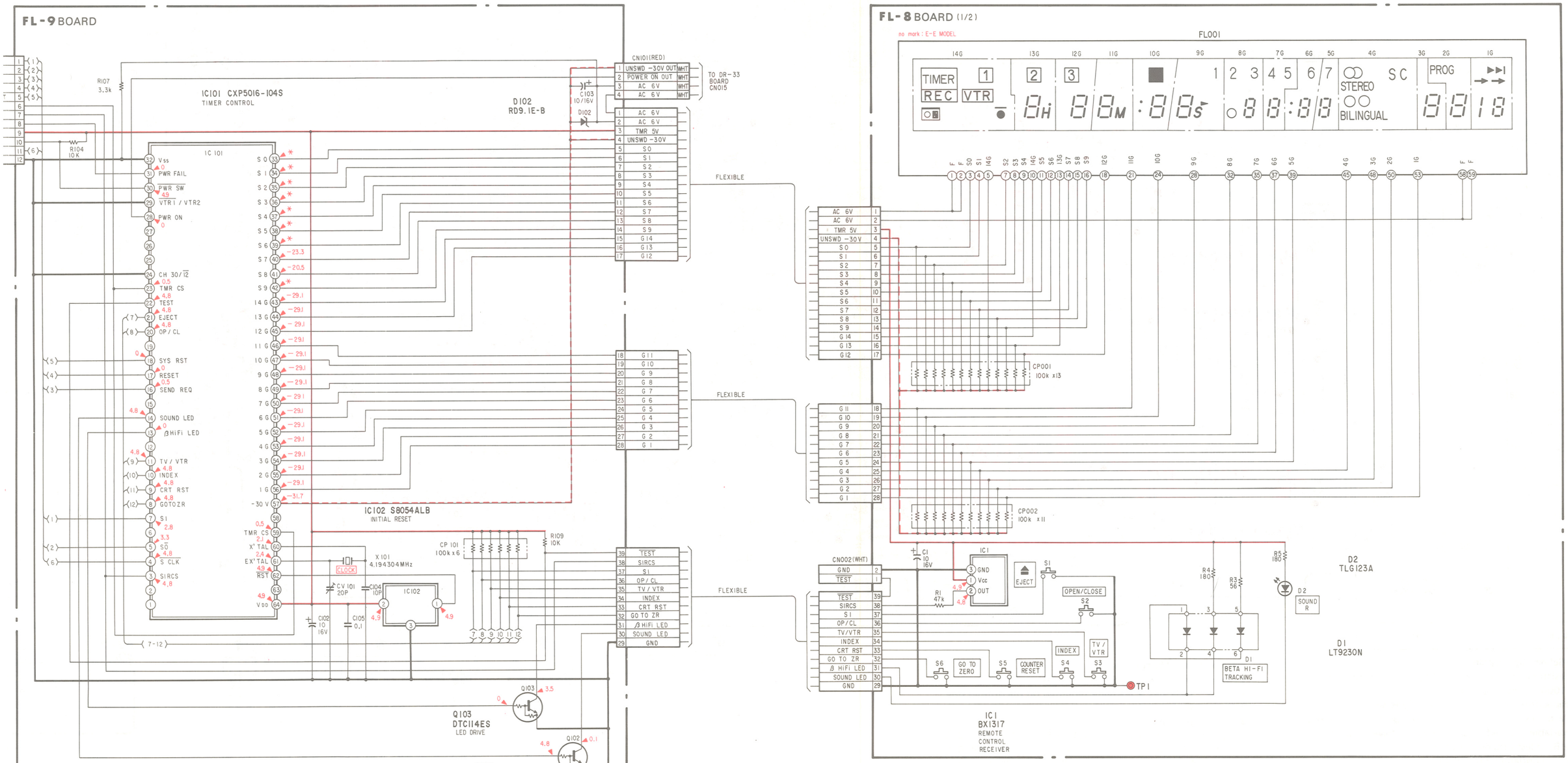

Note on Schematic Diagram:

- All resistors are in ohms, 1/6W unless otherwise noted. kΩ: 1000 Ω, MΩ: 1000 kΩ
- All capacitors are in μF unless otherwise noted. p: μμF 50WV or less are not indicated except for electrolytics.
- All variable and adjustable resistors have characteristic curve B, unless otherwise noted.
- : nonflammable resistor.
- : fusible resistor.

- The red lines show the main voltages.
- All voltages are dc measured with a VOM (10 MΩ).
- ▬▬ : B+ bus.
- ▬ ▬ : B− bus.

Note: The components identified by shading and mark ⚠ are critical for safety. Replace only with part number specified.

When indicating parts by reference number, please include the board name.

FL-8 (INDICATOR), FL-9 (TIMER CONTROL), FR-20 (FUNCTION SWITCH) PRINTED WIRING BOARDS

– Ref. No. FL-8 BOARD: 9,600 series, FL-9 BOARD: 9,700 series, FR-20 BOARD: 9,800 series,–

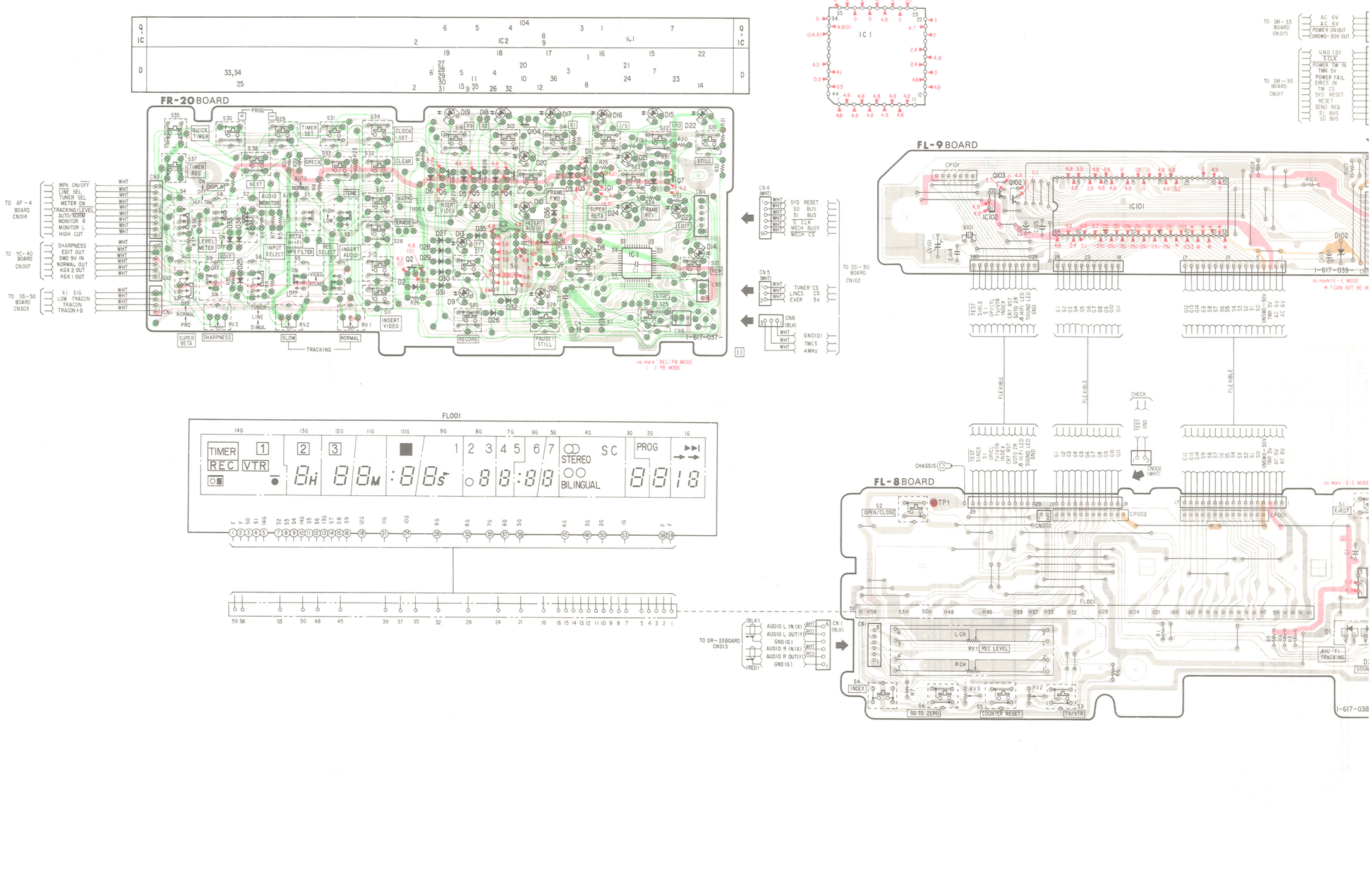

TIMER

7 8 9 10 11 12 13 14 15 16 17 18 19 20 21 22

A B C D E F G H I J

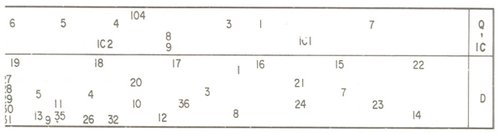

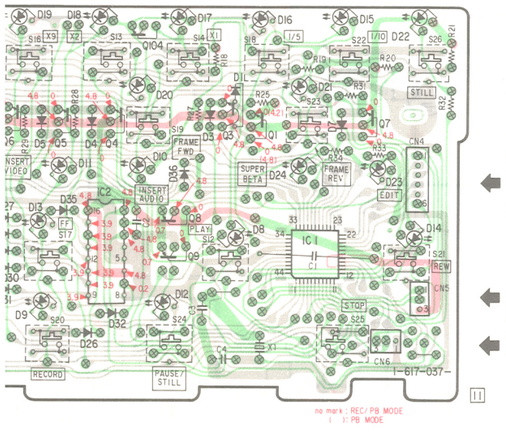

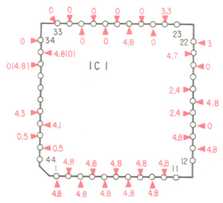

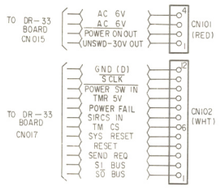

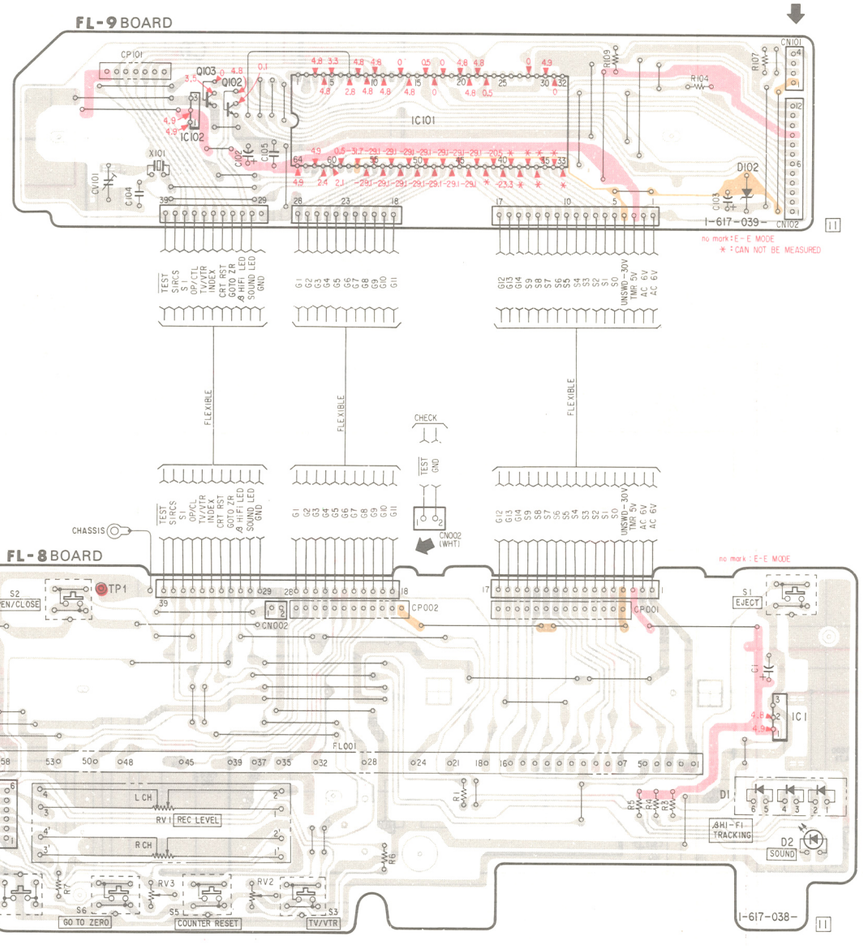

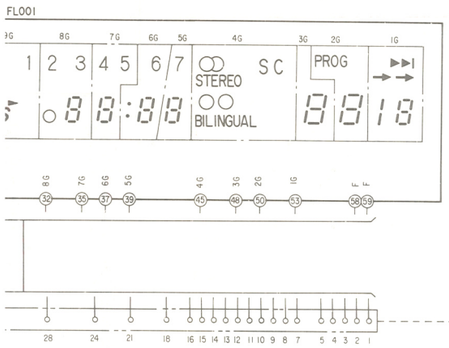

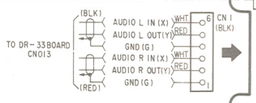

Note on Printed Wiring Board:

- ○—— : Indicates a leadwire mounted on the component side.
- ●—— : Indicates a leadwire mounted on the printed side.
- ⊗ : through hole
- ▒▒ : soldering side.
- ▒▒ : B+ pattern
- ▒▒ : B− pattern
- ▒▒ : component side.
- Digital transistor (FR-20: Q104. FL-9: Q102, 103) transistors with resistors.
  Refer to the FR-20 and FL-9 boards schematic diagrams.

When indicating parts by reference number, please include the board name.

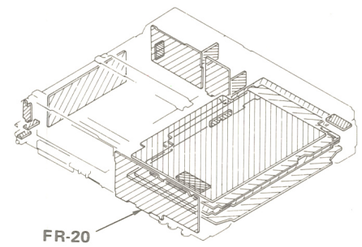

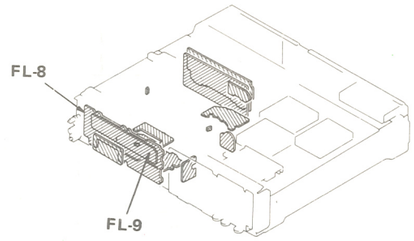

4-8. TA-36 (TUNER, AUDIO) SCHEMATIC DIAGRAM

– Ref. No. TA-36 BOARD: 4,000 series –

<ES MODEL>

- Signal path
  - : REC Y/C SIGNAL
  - : REC AUDIO SIGNAL
  - : PB AUDIO SIGNAL

TA-36 BOARD (1/2)

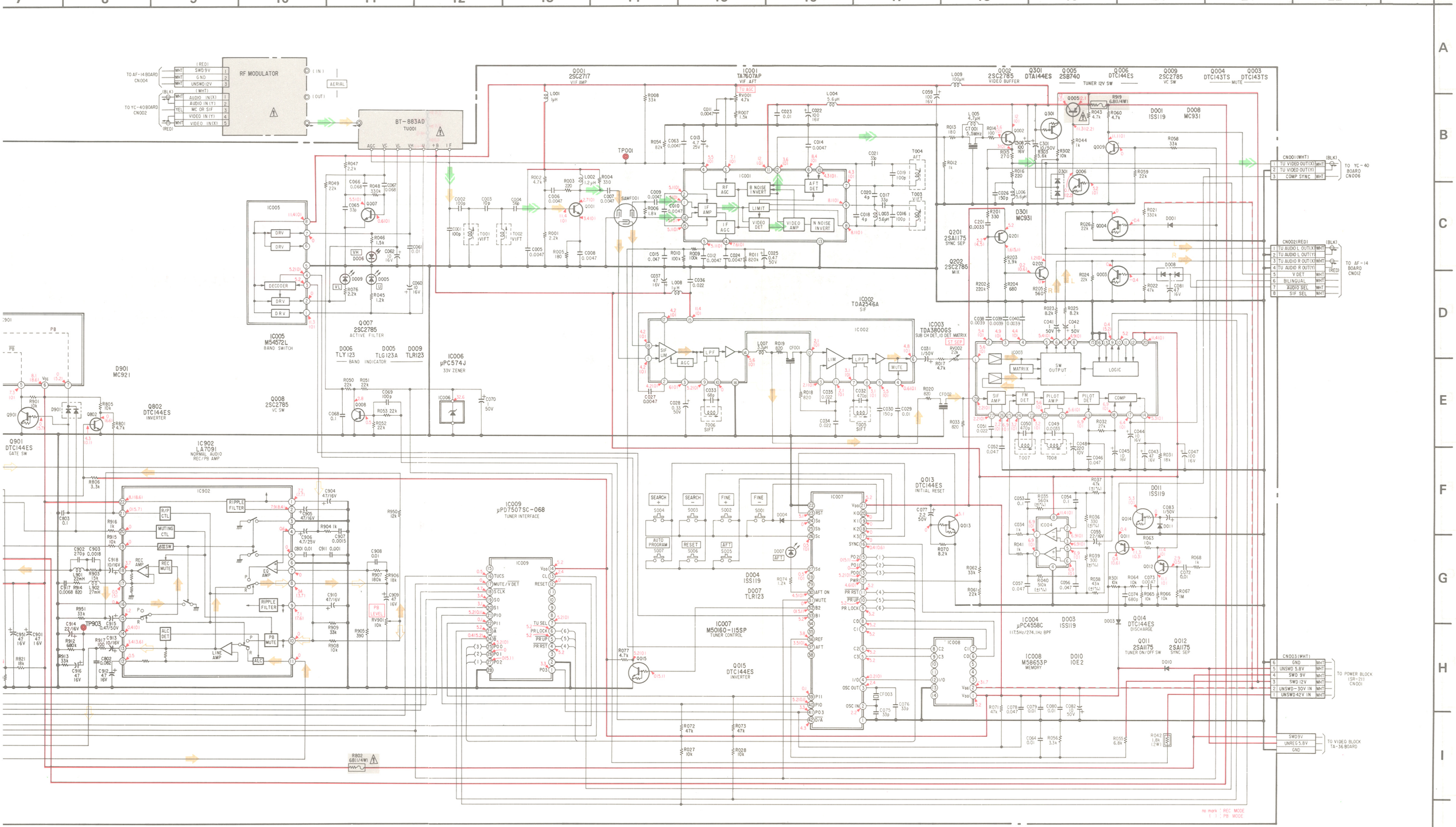
RF MODULATOR
BT-883AD
TU001
IC001 TA7607AP VIF AFT
Q001 2SC2717 VIF AMP
Q002 2SC2785 VIDEO BUFFER
Q301 DTA144ES
Q005 2SB740
Q006 DTC144ES
Q009 2SC2785 VC SW
Q004 DTC143TS
Q003 DTC143TS
TUNER 12V SW
MUTE
D001 ISS119
D008 MC931
D301 MC931
Q201 2SA1175 SYNC SEP
Q202 2SC2785 MIX
IC005 M54572L BAND SWITCH
Q007 2SC2785 ACTIVE FILTER
D006 TLY123
D005 TLG123A
D009 TLR123
BAND INDICATOR
IC006 μPC574J 33V ZENER
IC002 TDA2546A SIF
IC003 TDA3800GS SUB CH DET, ID DET, MATRIX
D901 MC921
Q802 DTC144ES INVERTER
Q901 DTC144ES GATE SW
Q008 2SC2785 VC SW
IC902 LA7091 NORMAL AUDIO REC/PB AMP
IC009 μPD7507SC-068 TUNER INTERFACE
IC007 M50160-115SP TUNER CONTROL
Q015 DTC144ES INVERTER
Q013 DTC144ES INITIAL RESET
IC004 μPC4558C 117.5Hz/274.1Hz BPF
D003 ISS119
Q014 DTC144ES DISCHARGE
IC008 M58653P MEMORY
D010 10E2
Q011 2SA1175 TUNER ON/OFF SW
Q012 2SA1175 SYNC SEP
D011 ISS119
SEARCH +
SEARCH −
FINE +
FINE −
AUTO PROGRAM
RESET
AFT
CNO01(WHT) (BLK)
TO YC-40 BOARD CNO06
CNO02(RED) (BLK)
TO AF-14 BOARD CNO12
CNO03(WHT)
TO POWER BLOCK (SR-21) CNO01
SWD 9V
UNREG 5.8V
GND
TO VIDEO BLOCK TA-36 BOARD
RB02 68Ω(1/4W)
no mark : REC MODE
( ) : PB MODE

TA-36 (TUNER, AUDIO) PRINTED WIRING BOARD

– Ref. No. TA-36 BOARD: 4,000 series –

Note on Schematic Diagram:

- All resistors are in ohms, 1/6 W unless otherwise noted. kΩ: 1000 Ω, MΩ: 1000 kΩ
- All capacitors are in μF unless otherwise noted. p: μμF 50WV or less are not indicated except for electrolytics.
- All variable and adjustable resistors have characteristic curve B, unless otherwise noted.
- : nonflammable resistor.
- : fusible resistor.
- The red lines show the main voltages.
- All voltages are dc measured with a VOM (10 MΩ).
- : B+ bus.
- : B– bus.

Note: The components identified by shading and mark ⚠ are critical for safety. Replace only with part number specified.

When indicating parts by reference number, please include the board name.

TA-36 BOARD

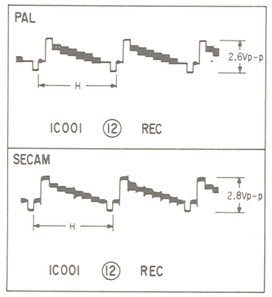

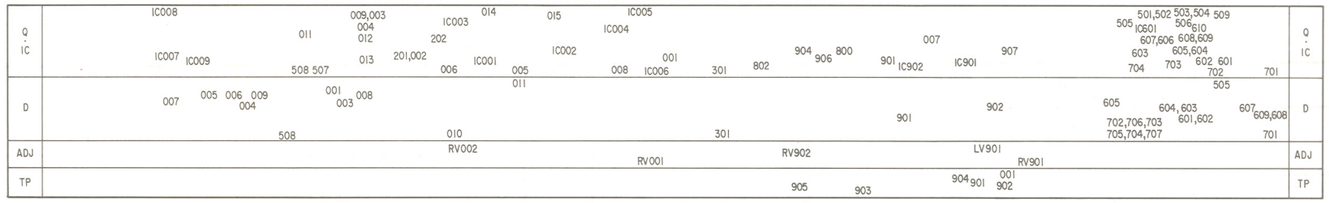

TA-36 BOARD

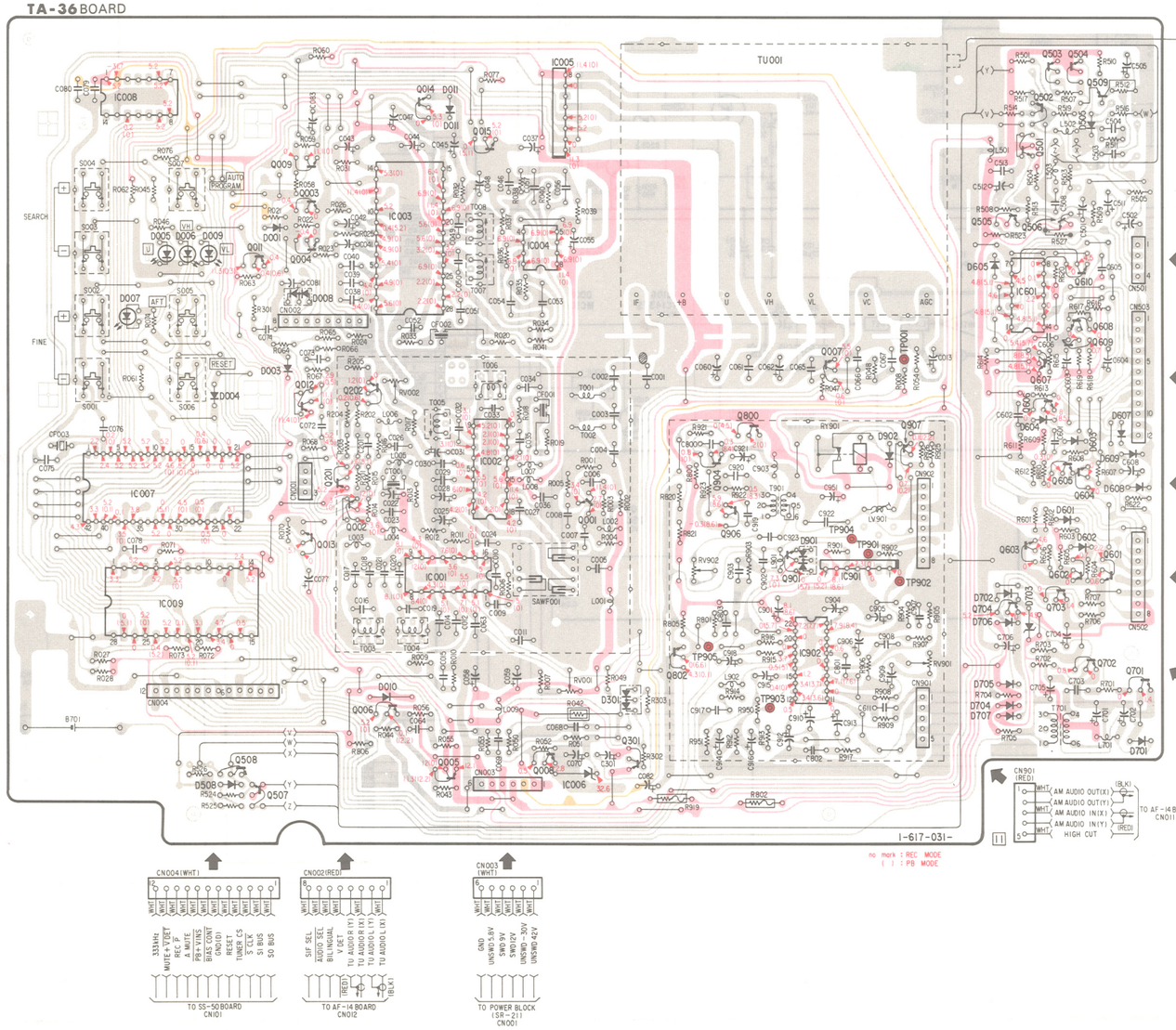

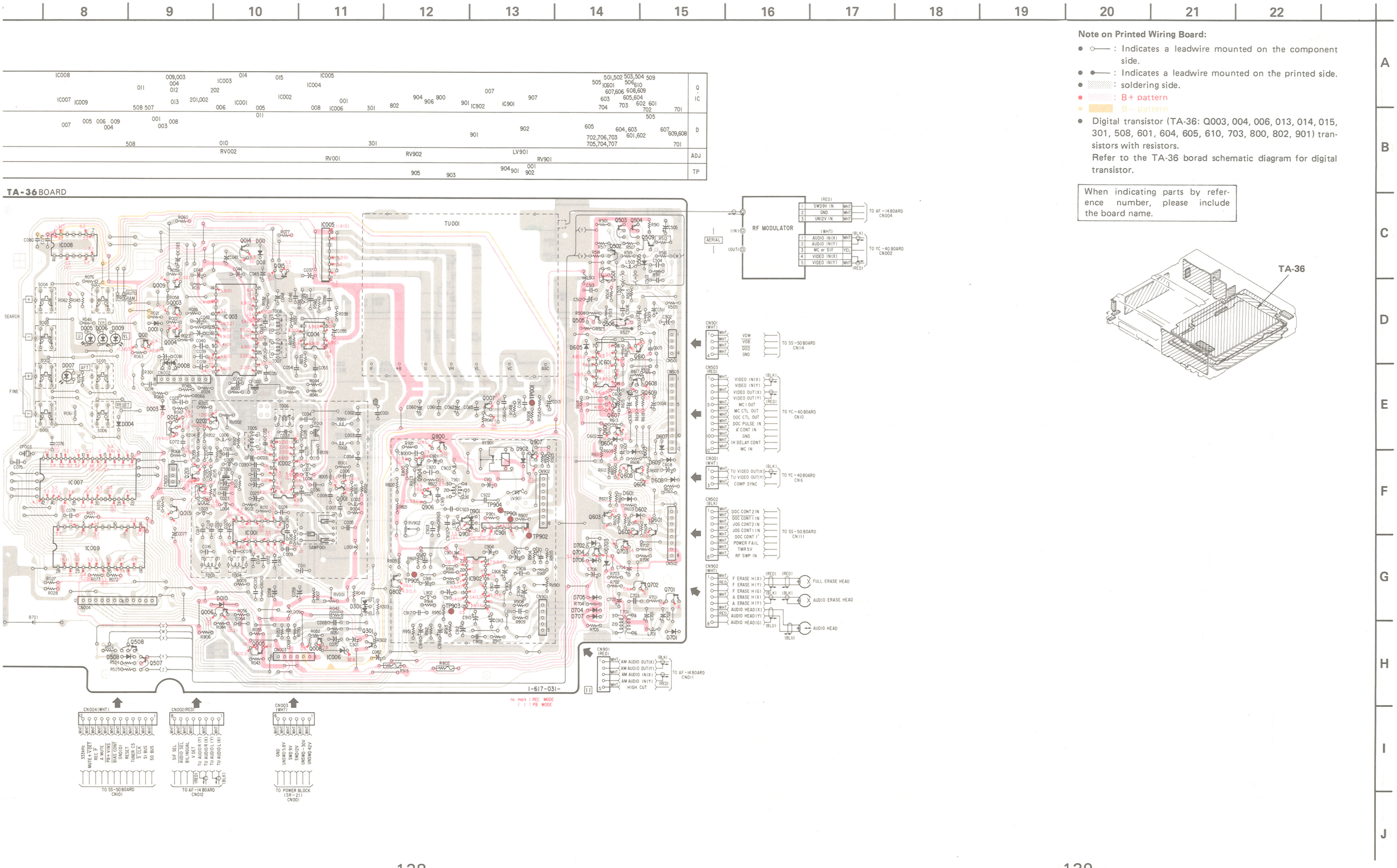

Note on Printed Wiring Board:

- ○—— : Indicates a leadwire mounted on the component side.
- ●—— : Indicates a leadwire mounted on the printed side.
- ▒ : soldering side.
- ▒ : B+ pattern
- ▒ : B− pattern
- Digital transistor (TA-36: Q003, 004, 006, 013, 014, 015, 301, 508, 601, 604, 605, 610, 703, 800, 802, 901) transistors with resistors.
  Refer to the TA-36 borad schematic diagram for digital transistor.

When indicating parts by reference number, please include the board name.

4-9. TA-37 (TUNER, AUDIO) SCHEMATIC DIAGRAM

– Ref. No. TA-37 BOARD: 5,000 series –

<E MODEL>

- Signal path
  - : REC Y/C SIGNAL
  - : REC AUDIO SIGNAL
  - : PB AUDIO SIGNAL

TA-37 BOARD (1/2)

7 8 9 10 11 12 13 14 15 16 17 18 19 20 21 22

A B C D E F G H I J

- **Signal path**
  - : REC Y/C SIGNAL
  - : REC AUDIO SIGNAL
  - : PB AUDIO SIGNAL

Note on Schematic Diagram:

- All resistors are in ohms, 1/6 W unless otherwise noted. kΩ: 1000 Ω, MΩ: 1000 kΩ
- All capacitors are in μF unless otherwise noted. p: μμF 50WV or less are not indicated except for electrolytics.
- All variable and adjustable resistors have characteristic curve B, unless otherwise noted.
- : nonflammable resistor.
- : fusible resistor.
- The red lines show the main voltages.
- All voltages are dc measured with a VOM (10 MΩ).
- : B+ bus.
- : B− bus.

Note: The components identified by shading and mark ⚠ are critical for safety. Replace only with part number specified.

When indicating parts by reference number, please include the board name.

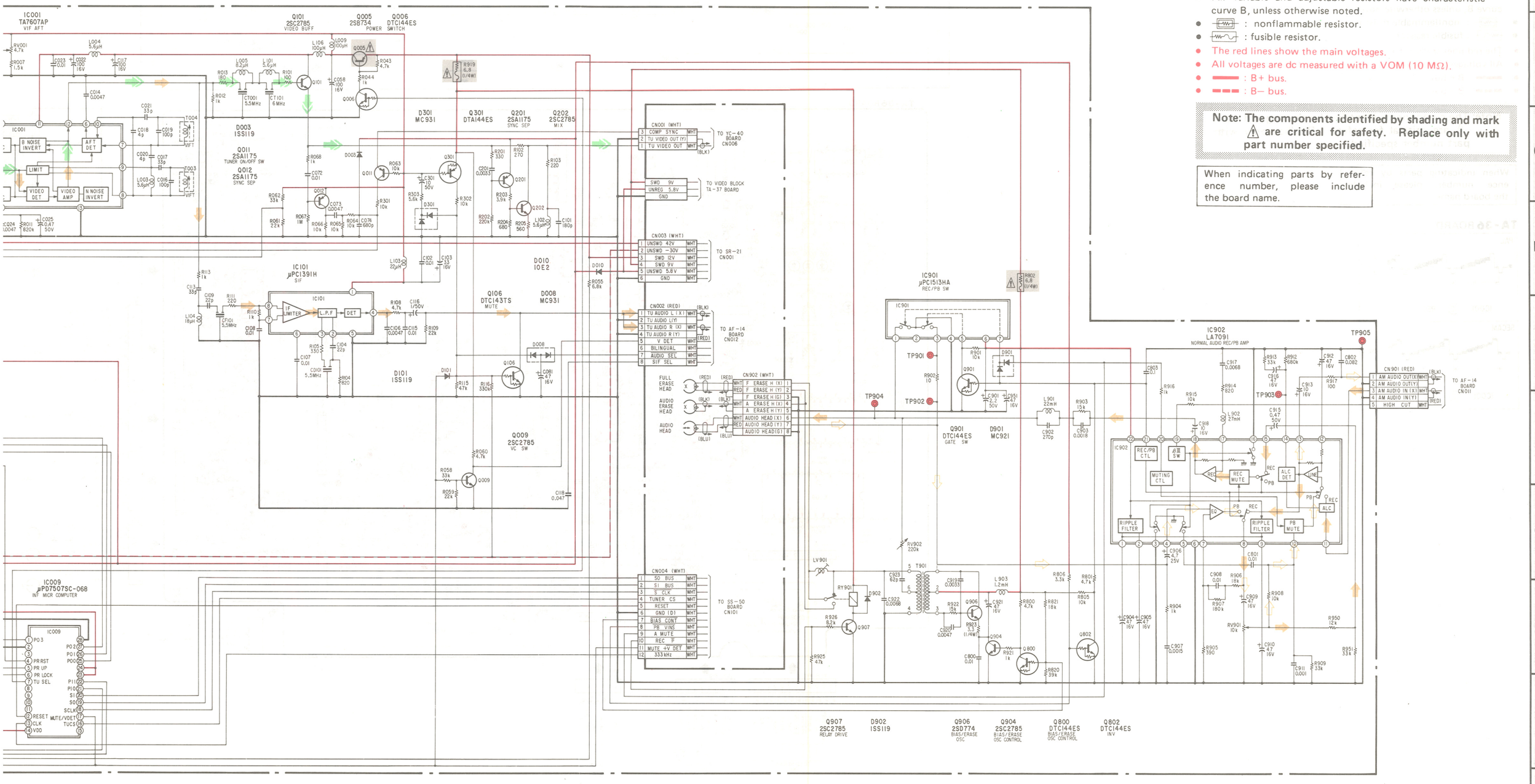

TA-37 (TUNER, AUDIO) PRINTED WIRING BOARD

– Ref. No. TA-37 BOARD: 5,000 series –

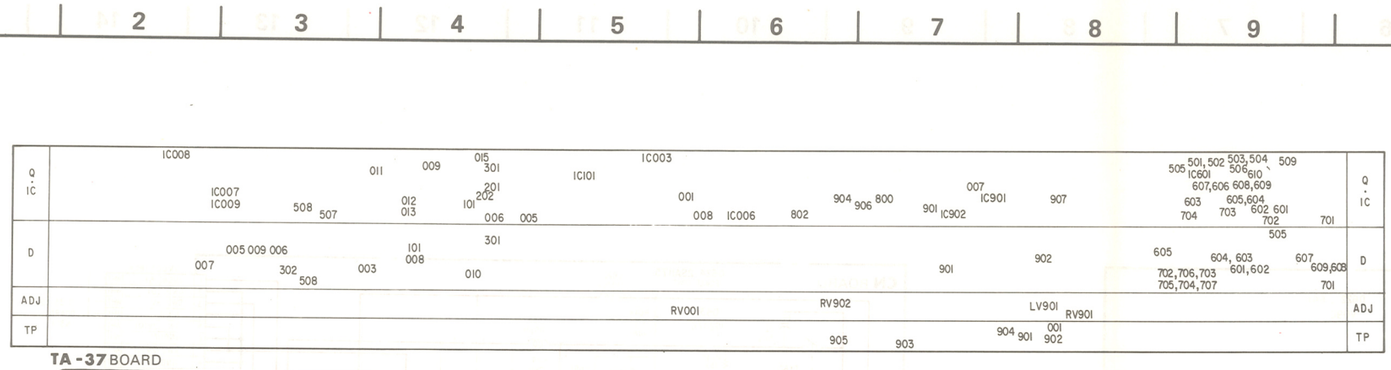

TA-37 BOARD

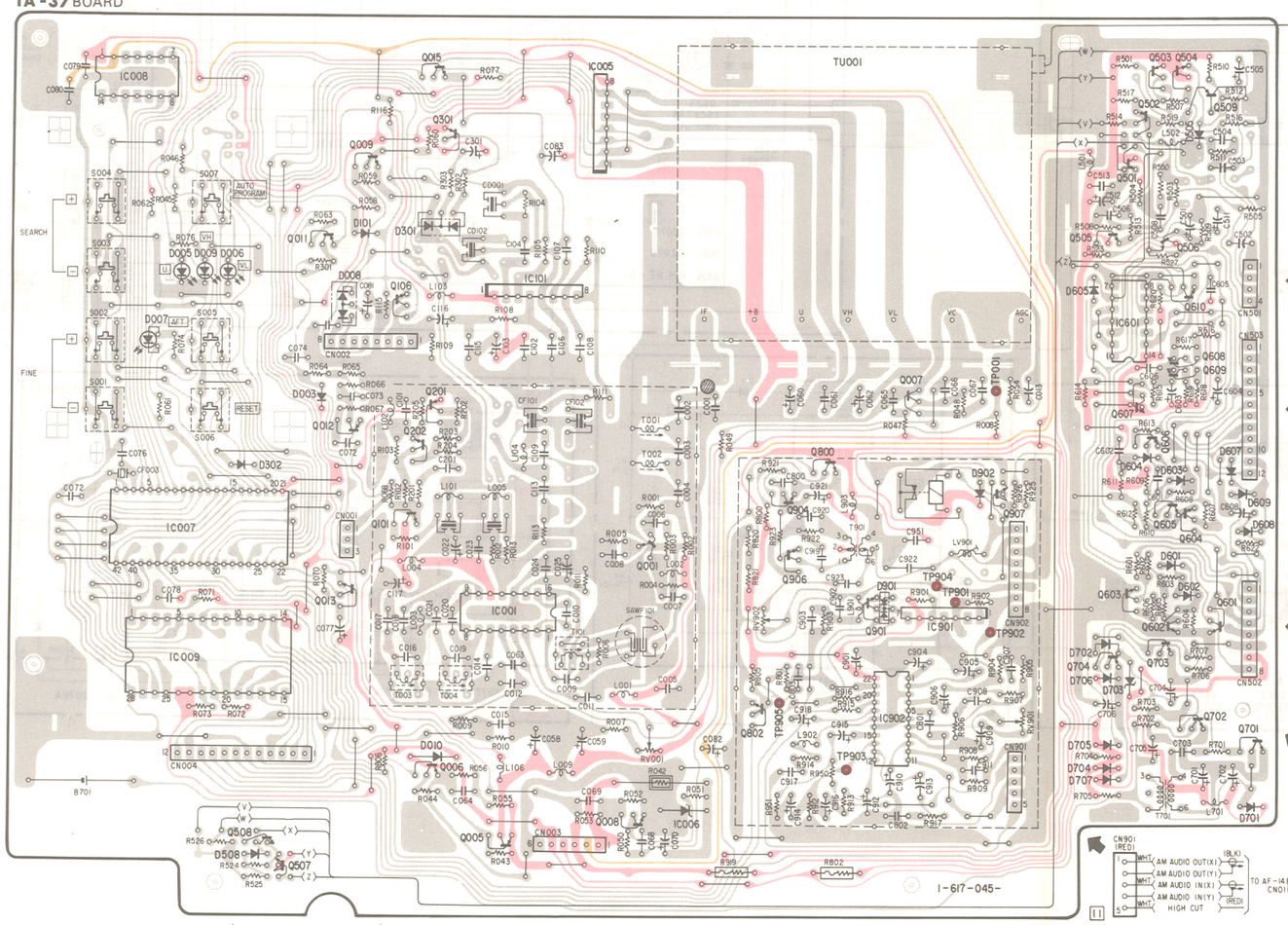

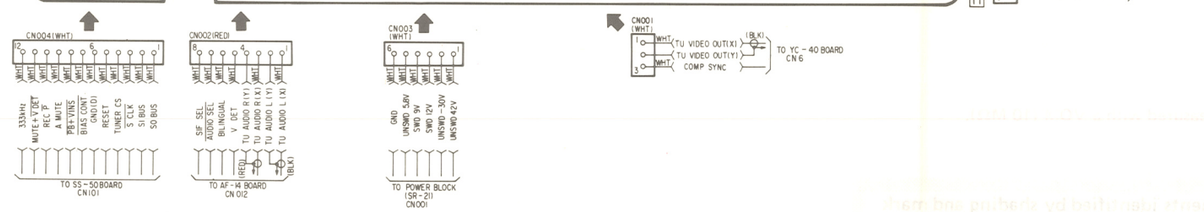

TA-37 BOARD

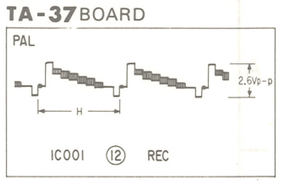

Note on Printed Wiring Board:

- ○—— : Indicates a leadwire mounted on the component side.
- ——● : Indicates a leadwire mounted on the printed side.
- ▒▒▒ : soldering side.
- ▒▒▒ : B+ pattern
- ▒▒▒ : B– pattern
- Digital transistor (TA-37: Q006, 013, 015, 106, 301, 508, 601, 604, 605, 610, 703, 800, 802, 901) transistors with resistors.
  Refer to TA-37 board schematic diagram for digital transistor.

When indicating parts by reference number, please include the board name.

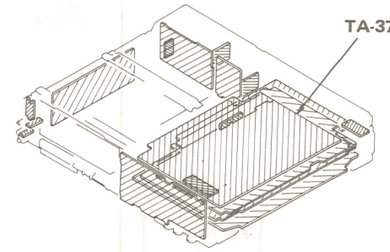

4-10. M (POWER), CN (POWER), C (POWER), D (POWER), F (POWER) SCHEMATIC DIAGRAMS

– Ref. No. M BOARD: 11,000 series, CN BOARD: 11,000 series, C BOARD:11,000 series, D BOARD: 11,000 series, F BOARD: 11,000 series –

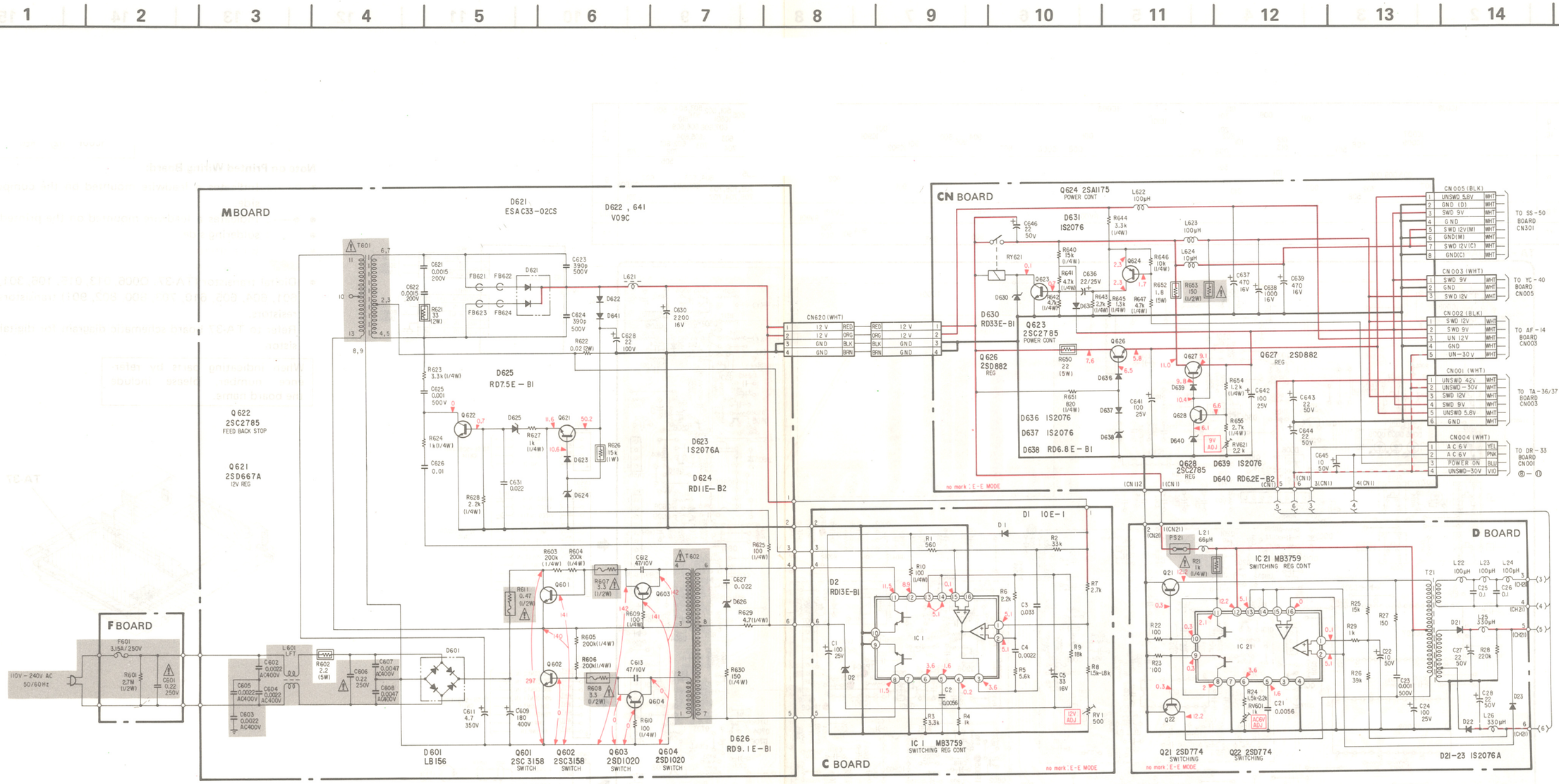

Note on Schematic Diagram:

- All resistors are in ohms, 1/6 W unless otherwise noted. kΩ: 1000 Ω, MΩ: 1000 kΩ
- All capacitors are in μF unless otherwise noted. p: μμF 50WV or less are not indicated except for electrolytics.
- All variable and adjustable resistors have characteristic curve B, unless otherwise noted.
- : nonflammable resistor.
- : fusible resistor.
- The red lines show the main voltages.

- All voltages are dc measured with a VOM (10 MΩ).
- : B+ bus.
- : B– bus.

Note: The components identified by shading and mark ⚠ are critical for safety. Replace only with part number specified.

When indicating parts by reference number, please include the board name.

M (POWER), CN (POWER), C (POWER), D (POWER), F (POWER) PRINTED WIRING BOARDS

– Ref. No. M BOARD: 11,000 series, CN BOARD: 11,000 series, C BOARD: 11,000 series, D BOARD: 11,000 series, F BOARD: 11,000 series –

Note on Printed Wiring Board:

- ●—○— : Indicates a leadwire mounted on the component side.
- ●—●— : Indicates a leadwire mounted on the printed side.
- ▒▒ : soldering side.
- ▒▒ : B+ pattern
- ▒▒ : B– pattern

When indicating parts by reference number, please include the board name.

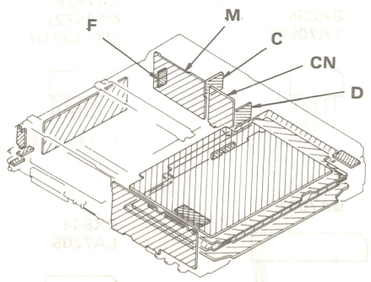

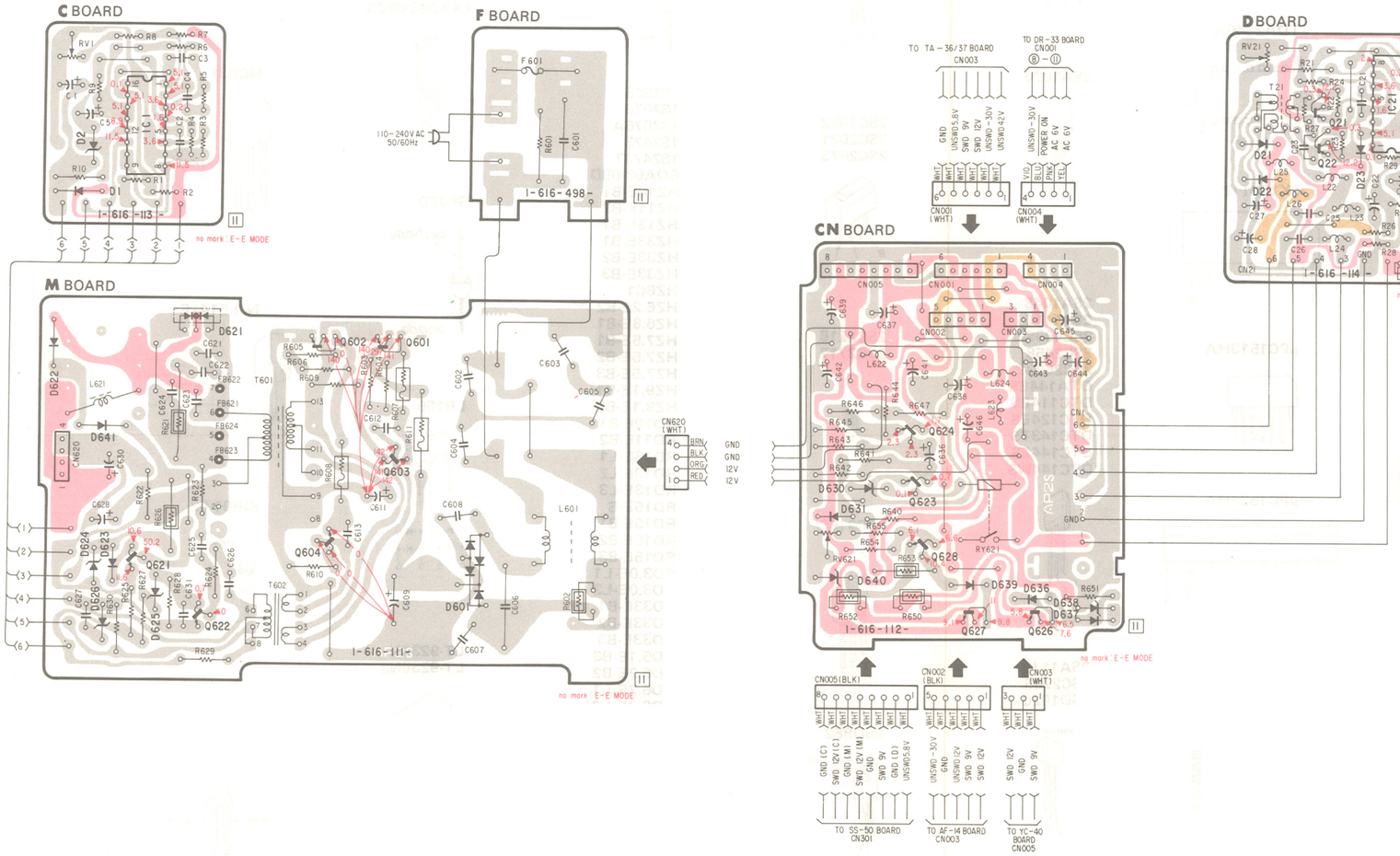

4-11. SEMICONDUCTORS

BA4558
HA17558
NJM4556D
NJM4558D
NJM4562D
μPC358C
μPC456C
μPC4558

BA634
TA7060P

BA7007

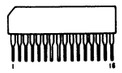

BX1317

CX10021A-NP
CX10021A-P
CX10021B-NP
CX10021B-P
CX20097A
CX20105
M50160-115SP

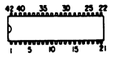

CX20043
CX20104
CX20124

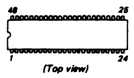

CX10023

CX20045
CX20069
CX866A
CX866B
TDA3800GS
μPD7507SC-068

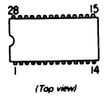

CX20061
CX7926
M54572L
μPC-1391H

CX894
LA7205

CXP5016-104S

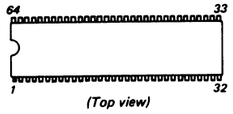

HD14053BP
M5T494P
MB3759
MB84051B
MB84053B
MB88201-191G
MC14538BCP
MSM6411B-19RS
SN74LS138N
TA7607AP
TC4051BP
TC4053BP
TK15052Z
μPD4051BC
μPD4053BC

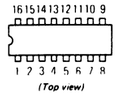

HD14066BP
IR3702
M58653P
MB3614
MB84013B
MB84066B
NJM2902N
TC4013BP
TC4066BP
TC504013BP
μPC324C
μPD4066BC

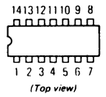

HZT33-02
μPC574J

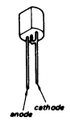

LA7091
MB89005-104

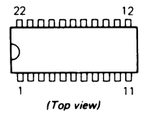

LB1640N

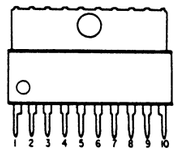

M50761-696P

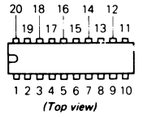

MB88551-173M

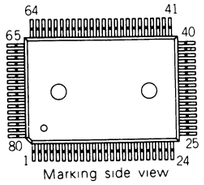

S-8054ALB

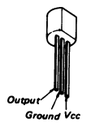

TDA2546A

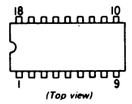

TK15011Z

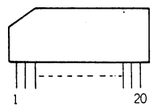

μPC1513HA

μPC1521HA

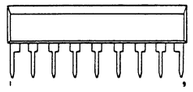

μPD7508HG-536-22
μPD7508HG-537-22

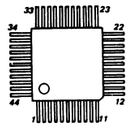

2SA473
2SB507HP
2SC1826
2SC2335
2SD313HP

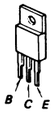

2SA844
2SA933S
2SA1015
2SC1740S
2SC2001

2SA1026

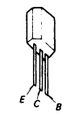

2SA1048
2SA1115
2SC403SP
2SC2458
2SC2603
DTA144ES
DTC114ES
DTC124ES
DTC143TS
DTC144ES
DTC144WS

2SA1175
2SC2785
2SD1020

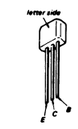

2SB733
2SB734
2SD773
2SD774

2SB739
2SB740
2SC1474
2SC1475
2SD667A
2SD788
2SD789

2SC1652
2SC2021
2SC2673

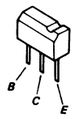

2SC2216
2SC2717

2SC3158

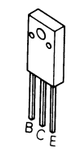

2SD882

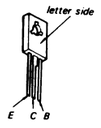

2SK152

10E1
10E2
11E2
ERB12-01RK
ERB12-02
ERB12-02RK

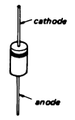

1S1555
1S2076
1S2076A
1S2473
1S2473T
EQA02-09D
HZ10E-B1
HZ11E-B2
HZ13E-B1
HZ33E-B1
HZ33E-B2
HZ33E-B3
HZ6C1
HZ6.2E-B2
HZ6.8E-B1
HZ7.5E-B1
HZ7.5E-B2
HZ7.5E-B3
HZ9.1E-B1
HZ9.1E-B2
RD10E-B1
RD11E-B2
RD13E-L1
RD13E-L2
RD13E-L3
RD15E-B
RD15E-B1
RD15E-B2
RD15E-B3
RD3.0E-L1
RD3.0E-L2
RD33E-B1
RD33E-B2
RD33E-B3
RD5.1E-B3
RD6.2E-B2
RD6.2E-L1
RD6.2E-L2
RD6.2E-L3
RD6.2E-N1
RD6.8E-B1
RD7.5E-B1
RD7.5E-B2
RD7.5E-B3
RD9.1E-B
RD9.1E-B1
RD9.1E-B2
RD9.1E-B3

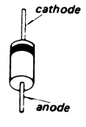

1SS119
1SS133
1SS148

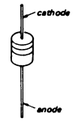

EM1Z

ESAC33-02CS

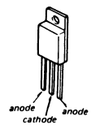

GP08D

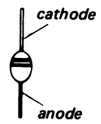

LB156

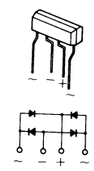

LT-9230N
LT-9230N2

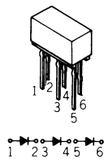

MC911

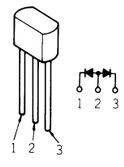

MC921

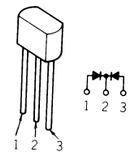

MC931

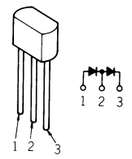

NJL5141E

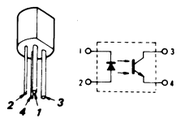

SIB01-02

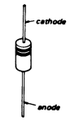

TLG123A
TL0123
TLR123
TLY123

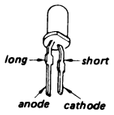

V09C
V09E
V09G

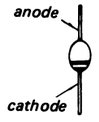

SECTION 5
EXPLODED VIEWS

NOTE:

- Itmes with no part number and no description are not stocked because they are seldom required for routine service.
- The construction parts of an assembled part are indicated with a collation number in the remark column.
- Items marked "*" are not stocked since they are seldom required for routine service. Some delay should be anticipated when ordering these items.
- The mechanical parts with no reference number in the exploded views are not supplied.

The components identified by shading and mark ⚠ are critical for safety. Replace only with part number specified.

5-1. CABINET ASSEMBLY

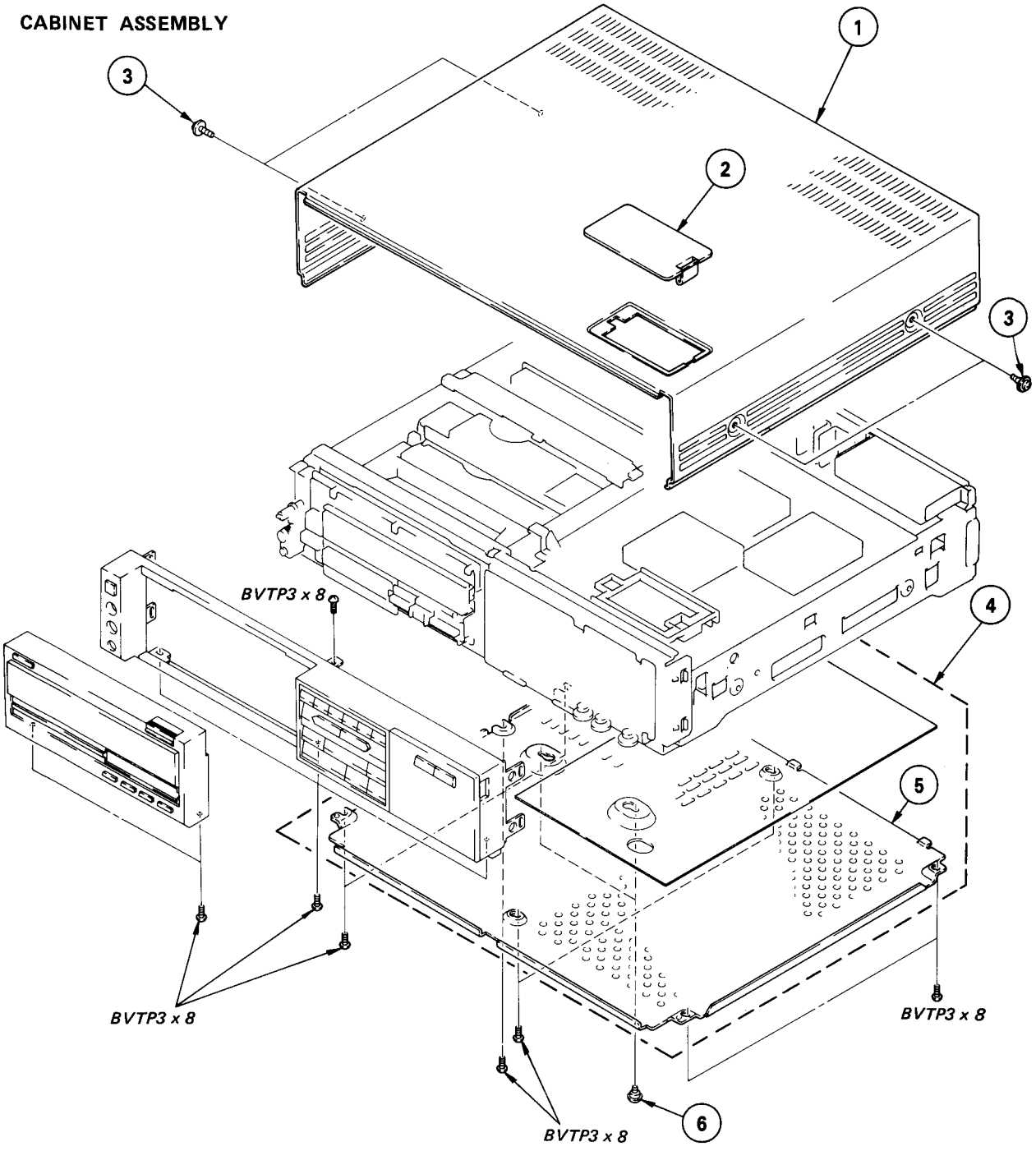

No.	Part No.	Description	Remark
1	X-3697-617-1	CASE ASSY, UPPER	
2	3-684-177-51	LID, PRESET	
3	4-886-821-01	SCREW, M3 CASE	
4	X-3697-618-1	PLATE ASSY, BOTTOM	5
5	*3-697-645-01	PLATE, BOTTOM	
6	3-696-537-01	SCREW, FIXED, TRANSPORT	

5-2. FRONT PANEL ASSEMBLY

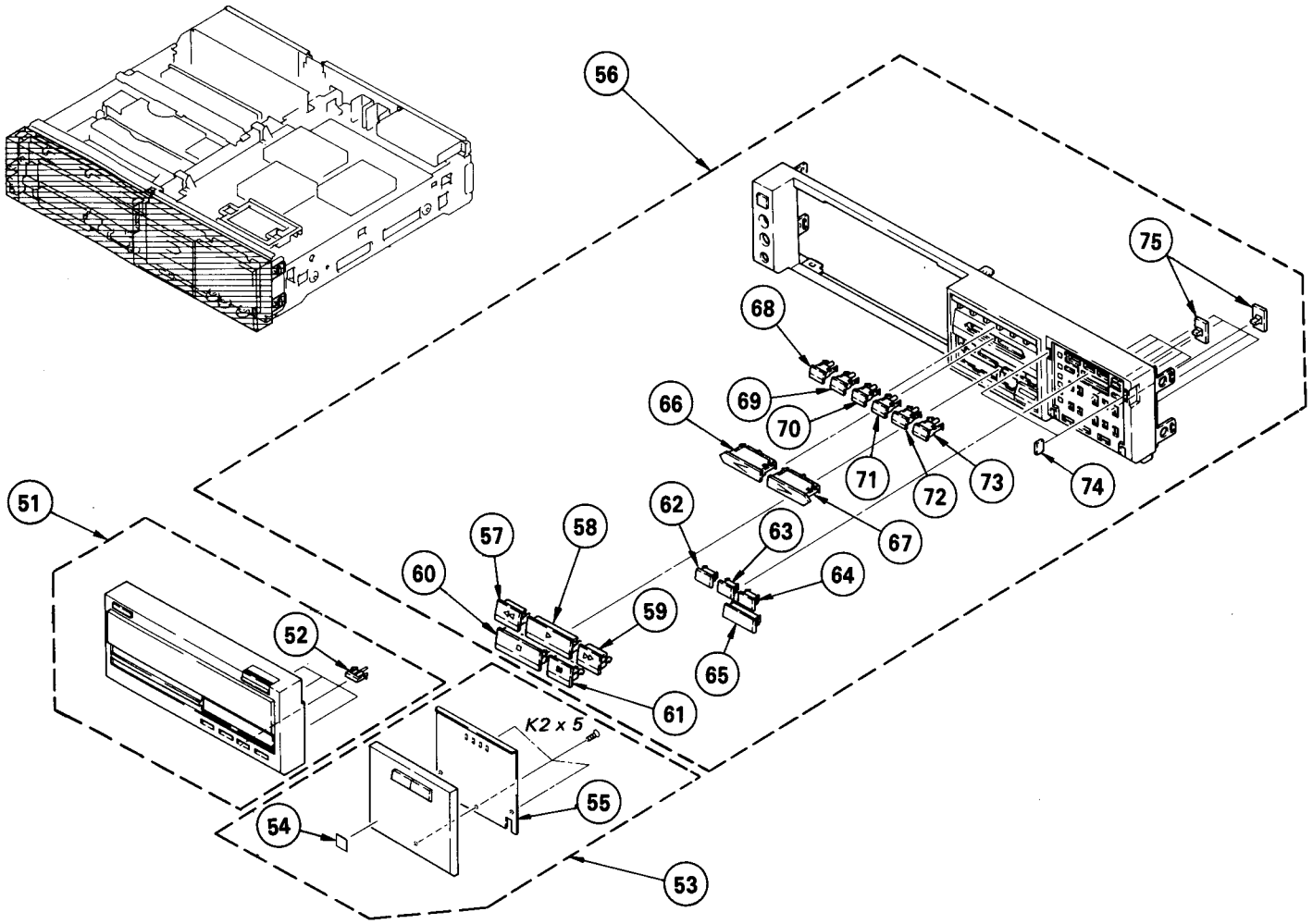

No.	Part No.	Description	Remark
51	X-3697-607-1	PANEL ASSY, LS FRONT (ES MODEL)	52
	X-3697-613-1	PANEL ASSY, LS FRONT (E MODEL)	52
52	3-697-601-01	BUTTON, TV/VTR	
53	X-3697-603-1	DOOR ASSY, FRONT	54, 55
54	3-703-713-41	STICKER, SONY SYMBOL (10)	
55	3-697-671-01	PLATE, ORNAMENTAL, DOOR	
56	X-3697-608-1	PANEL ASSY, FRONT	57-75
57	3-696-454-11	BUTTON (REW), CONTROL	
58	3-696-455-11	BUTTON (PLAY), CONTROL	
59	3-696-457-11	BUTTON (FF), CONTROL	
60	3-696-456-11	BUTTON (STOP), CONTROL	
61	3-696-458-11	BUTTON (PAUSE), CONTROL	
62	3-697-618-01	BUTTON, TIMER	
63	3-697-618-21	BUTTON, TIMER	
64	3-697-618-11	BUTTON, TIMER	
65	3-697-617-01	BUTTON, NEXT	
66	3-697-613-01	BUTTON (LEFT)	
67	3-697-619-01	BUTTON (RIGHT)	
68	3-697-620-01	BUTTON, MODE	
69	3-697-620-11	BUTTON, MODE	
70	3-697-620-21	BUTTON, MODE	
71	3-697-620-31	BUTTON, MODE	
72	3-697-620-41	BUTTON, MODE	
73	3-697-620-51	BUTTON, MODE	
74	3-684-461-01	MAGNET, POCKET LOCK	
75	3-697-616-01	KNOB (A), SLIDE	

5-3. MAIN BOARD ASSEMBLY

The components identified by shading and mark ⚠ are critical for safety. Replace only with part number specified.

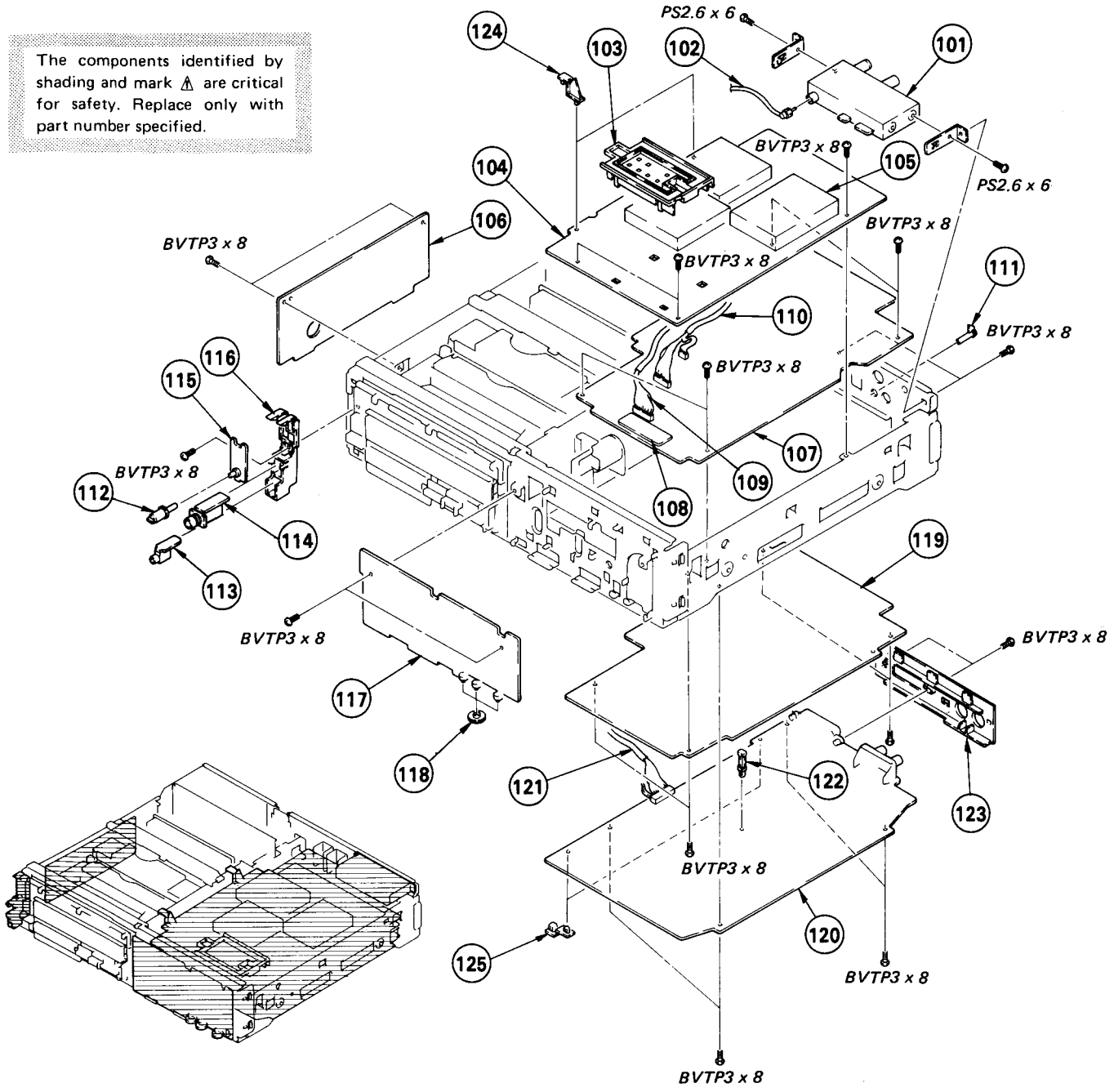

No.	Part No.	Description	Remark
101	⚠1-464-479-11	BOOSTER MIXER, RF MODULATOR (ES MODEL)	
	⚠1-464-386-11	BOOSTER MIXER, RF MODULATOR (E MODEL)	
102	*1-555-110-00	CABLE, PIN	
103	X-3697-601-1	COVER ASSY, PRESET	
104	*A-6721-248-A	TA-36 BOARD, COMPLETE (ES MODEL)	
	*A-6721-258-A	TA-37 BOARD, COMPLETE (E MODEL)	
105	⚠1-463-577-31	TUNER, ET (BT-883AD) (ES MODEL)	
	⚠1-463-584-21	TUNER, ET (BT-881AD) (E MODEL)	
106	*A-6711-660-A	DH-4 BOARD, COMPLETE	
107	*A-6715-272-A	SS-50 BOARD, COMPLETE	108
108	*1-617-383-11	QV-1 BOARD	
109	*1-936-804-11	HARNESS (SD-13)	
110	*1-936-805-11	HARNESS (SD-12)	
111	3-670-149-00	KNOB, V SYNCHRONOUS	
112	3-696-103-01	KNOB, HP	
113	*1-617-043-11	MC-10 BOARD	
114	*1-617-042-11	HP-18 BOARD	
115	*1-617-041-11	PW-15 BOARD	
116	*3-697-653-01	HOLDER, JACK	
117	*A-6725-469-A	FR-20 BOARD, COMPLETE	
118	3-697-622-01	KNOB, TRACKING	
119	*A-6713-237-A	B-697 BOARD, COMPLETE (AF-14)	
120	*A-6711-658-A	YC-40 BOARD, COMPLETE (ES MODEL)	
	*A-6711-698-A	YC-40 BOARD, COMPLETE (E MODEL)	
121	*1-936-802-11	HARNESS (YP-3)	
122	*3-669-610-00	SPACER	
123	*3-697-630-01	PANEL, CONNECTOR	
124	*3-697-709-01	HING, PCB (T)	
125	*3-697-710-01	HING, PCB (Y)	

5-4. FRAME ASSEMBLY

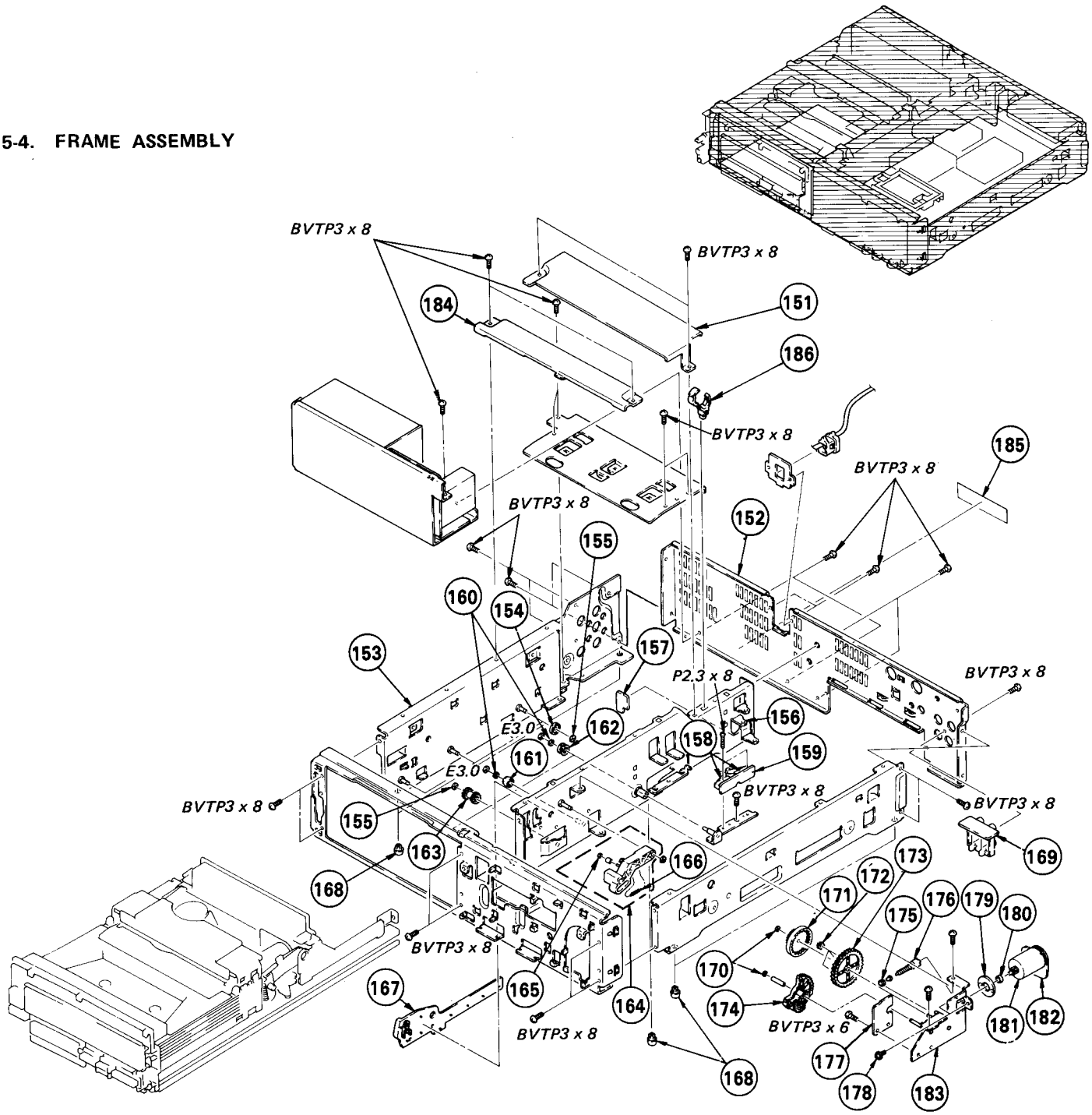

No.	Part No.	Description	Remark
151	*3-697-628-01	RETAINER, HARNESS, MOVABLE	
152	*3-697-634-01	FRAME (REAR)	
153	*X-3697-605-1	FRAME (LEFT) ASSY	
154	3-696-494-01	ROLLER (LEFT), LS	
155	3-696-510-01	WASHER (3), STOPPER	
156	*X-3697-606-1	FRAME (INNER) ASSY	
157	*3-697-679-01	CUSHION, LS	
158	1-570-424-11	SWITCH, MICRO (MS 1, 2)	
159	*1-616-602-11	PC BOARD, OC-1	
160	3-701-441-11	WASHER	
161	3-696-501-01	ROLLER (RIGHT) (B), LS	
162	3-696-492-01	ROLLER (RIGHT), LS	
163	3-696-574-01	GEAR (B), LS DRIVE	
164	*A-6751-250-A	ARM BLOCK ASSY, U/D	165, 166
165	3-669-465-00	WASHER (1.5), STOPPER	
166	3-696-410-01	SPRING, TENSION	
167	*3-696-425-02	GUIDE (LS)	
168	3-670-155-11	LEG	
169	*1-617-034-11	PJ-3 BOARD	

No.	Part No.	Description	Remark
170	3-669-595-00	WASHER (2), STOPPER	
171	3-696-573-01	GEAR (LS) (B), INT TOOTH	
172	*3-696-497-01	GEAR (LS), PLANET	
173	*X-3696-302-3	GEAR ASSY, INPUT	
174	X-3697-609-2	GEAR ASSY, U/D	
175	*3-696-389-01	BUSHING, RUBBER	
176	*3-696-319-01	GEAR (LS), WORM	
177	*1-616-598-11	US-1 BOARD	
178	3-696-518-01	SCREW (M2.6X4), W (+) P	
179	3-696-390-01	MOTOR (MOUNT)	
180	3-696-388-01	RUBBER, JOINT	
181	X-3696-306-1	MOTOR ASSY, DC (SKATE MOTOR) M905	
182	*1-616-600-11	LS-11 BOARD	
183	*X-3696-340-1	BASE ASSY, GEAR	
184	*3-697-629-01	STAY (UPPER)	
185	*3-697-688-01	LABEL, MODEL NUMBER (NO.1) (ES MODEL)	
185	*3-697-690-01	LABEL, MODEL NUMBER (NO.1) (E MODEL)	
186	*3-697-707-01	CLAMP, HARNESS	

5-5. POWER ASSEMBLY

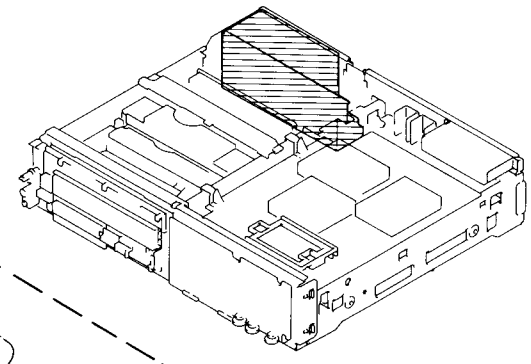

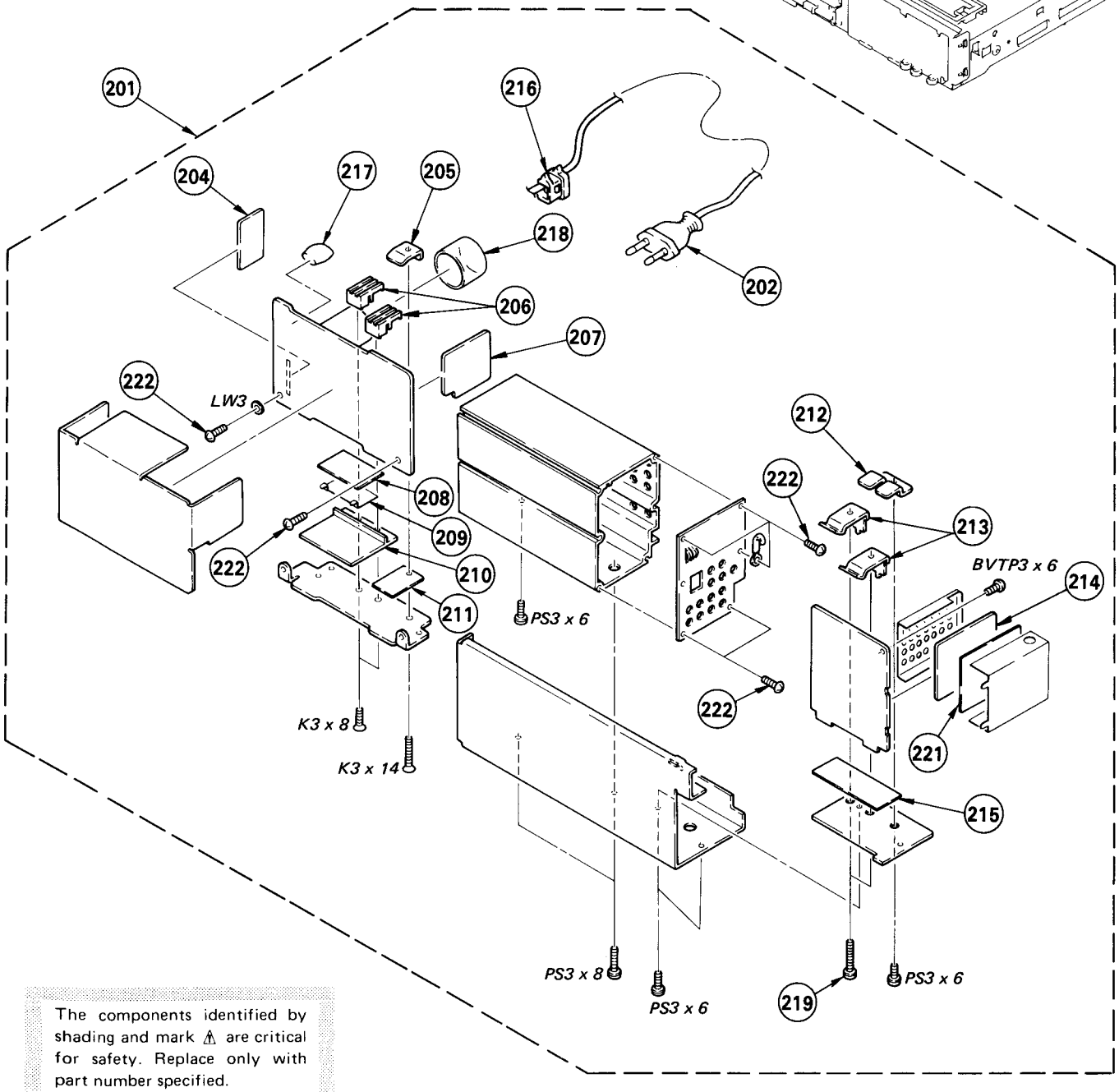

The components identified by shading and mark ⚠ are critical for safety. Replace only with part number specified.

No.	Part No.	Description	Remark
201	⚠ 1-413-229-11	REGULATOR, SWITCHING (SR-21E)	202-222
202	⚠.1-534-817-31	CORD, POWER	
204	⚠*.1-616-498-11	F BOARD	
205	*2-434-043-01	RETAINER, DIODE DP-SR17	
206	⚠*.2-431-517-01	RETAINER, TRANSISTOR (TP-CR35)	
207	*1-616-113-11	C BOARD	
208	⚠.2-431-531-01	RUBBER, INSULATING STB-SR21	
209	*2-434-230-01	BRACKET SP-CR35	
210	⚠.2-431-530-01	RUBBER, INSULATING STA-SR21	
211	2-431-515-01	RUBBER, HEATSHINK STB-CR35	

No.	Part No.	Description	Remark
212	*2-434-240-01	BRACKET (DP-SR21)	
213	*2-434-238-01	BRACKET (RP-SR21)	
214	*1-616-114-11	D BOARD	
215	2-431-532-01	RUBBER, INSULATING	
216	⚠.3-703-244-02	CLAMPER, CORD	
217	⚠.4-374-846-11	COVER, CAPACITOR, CAP TYPE	
218	⚠.2-431-533-01	COVER, CAPACITOR	
219	2-434-060-01	SCREW +M 3X18	
221	*2-431-535-01	SHEET, INSULATING	
222	2-434-241-01	SCREW +B 3X8	

5-6. LS ASSEMBLY

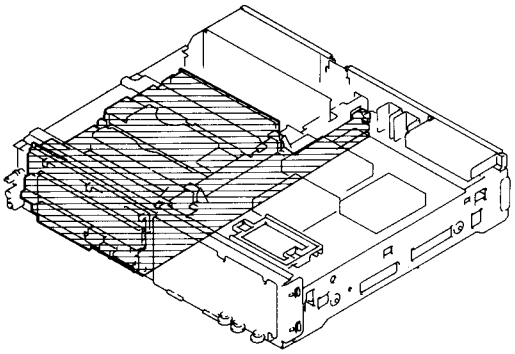

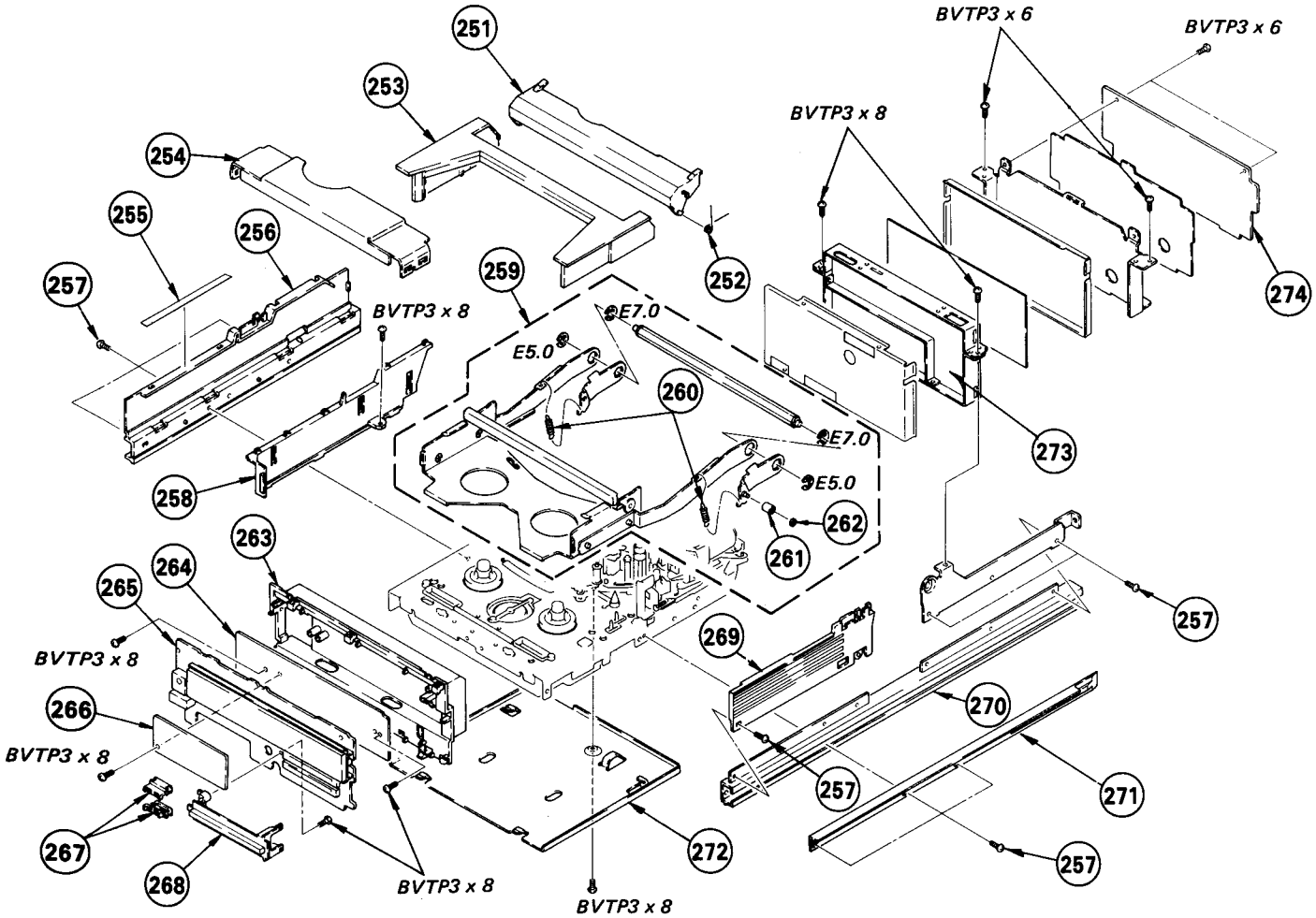

No.	Part No.	Description	Remark
251	3-696-418-03	COVER, M, TRAY	
252	3-696-362-01	SPRING	
253	*3-696-472-01	COVER, TRAY	
254	X-3697-602-1	COVER ASSY, DRUM	
255	3-696-575-01	COVER, EDGE, RAIL (LEFT)	
256	*3-696-461-01	RAIL (LEFT)	
257	3-696-519-01	SCREW (3X8), (+) P IT3	
258	*3-696-476-01	WALL, INSIDE, LEFT	
259	*A-6751-247-A	TRAY BLOCK ASSY	260-262
260	3-639-333-01	SPRING, TENSION	
261	*3-696-493-01	ROLLER, LOCK	
262	3-590-523-00	WASHER, STOPPER	
263	3-697-635-01	PANEL, REAR, LS	
264	*A-6724-467-A	FL-9 BOARD, COMPLETE	
265	*A-6724-466-A	FL-8 BOARD, COMPLETE	
266	1-520-485-11	METER UNIT, LEVEL	
267	3-697-625-01	KNOB, REC-VR	
268	3-697-636-01	SCALE, DIAL, REC VOLUME	
269	*3-696-473-02	WALL (R), SIDE	
270	*3-696-462-01	RAIL (RIGHT)	
271	*3-696-465-02	RACK, LS	
272	*X-3696-342-1	PLATE ASSY, BOTTOM, LS	
273	*A-6711-659-A	RP-31 BOARD, COMPLETE	
274	*A-6717-408-A	DR-33 BOARD, COMPLETE	

5-7. CHASSIS ASSEMBLY (1)

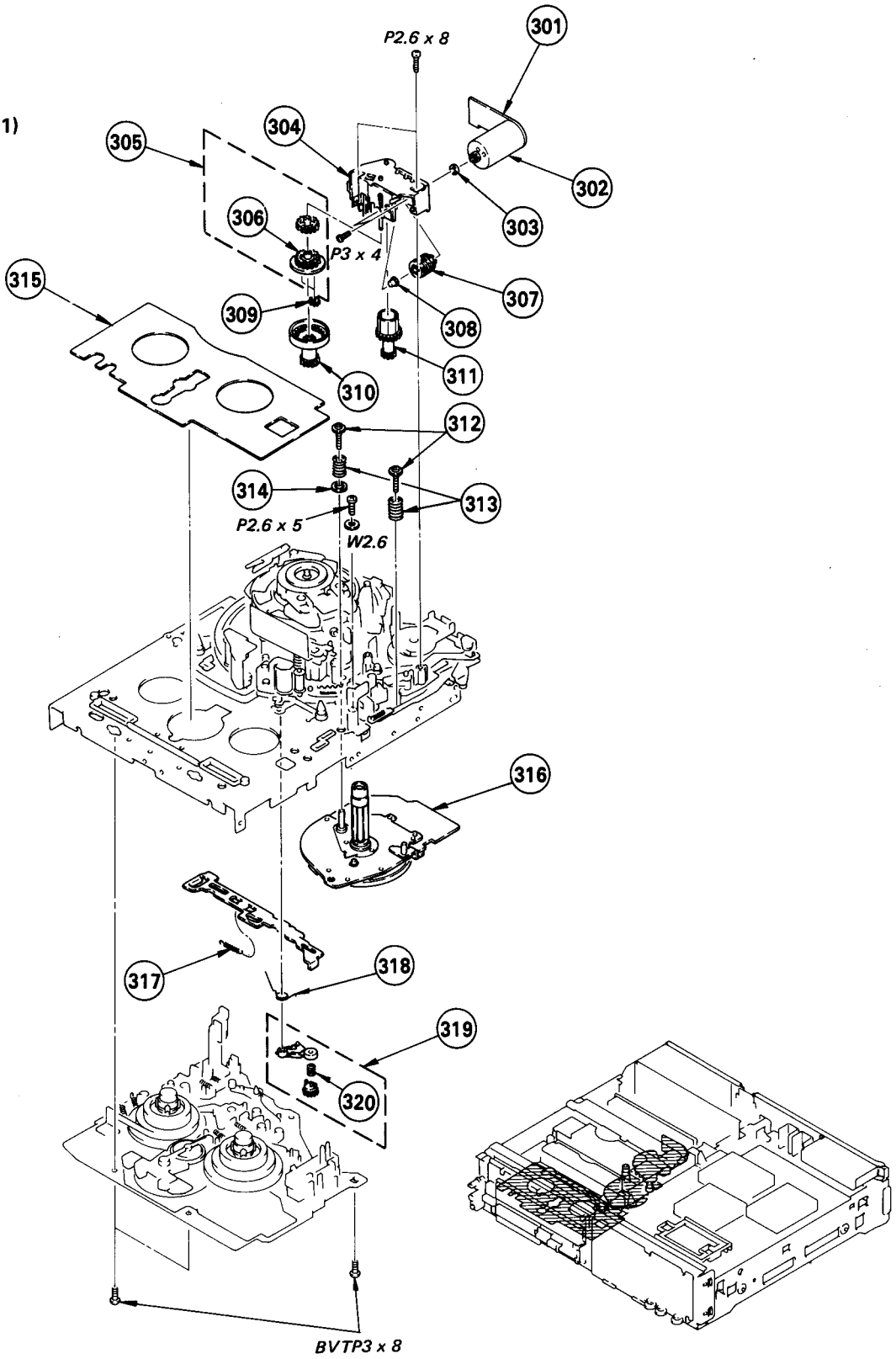

No.	Part No.	Description	Remark
301	*1-616-601-11	LM-17 BOARD	
302	X-3696-314-1	MOTOR ASSY, L (LOADING MOTOR) M904	
303	3-696-388-01	RUBBER, JOINT	
304	X-3696-330-3	BRACKET ASSY	
305	X-3696-307-1	WHEEL ASSY, WORM	306
306	X-3696-322-1	GEAR ASSY, PLANET	
307	3-696-302-01	GEAR, WORM	
308	3-696-304-01	BEARING, WORM	
309	3-696-325-01	GEAR, PLANET	
310	X-3696-308-1	GEAR ASSY, INNER	
311	X-3696-321-1	GEAR ASSY, RELAY	
312	3-669-633-00	SCREW, + PW2	
313	3-679-359-00	SPRING, COMPRESSION	
314	3-693-831-01	WASHER, GUIDE	
315	3-696-527-01	COVER, MECHANICAL CHASSIS	
316	8-838-096-01	MOTOR, DC (BHF-1914A)(CAPSTAN MOTOR)M902	
317	3-696-345-01	SPRING (SLIDE PLATE), TENSION	
318	3-696-385-01	SPRING, TORSION (REVIEW BRAKE)	
319	X-3691-648-1	ARM ASSY (B), REVIEW BRAKE	320
320	3-691-792-01	SPRING, COMPRESSION	

5-8. REEL TABLE ASSEMBLY

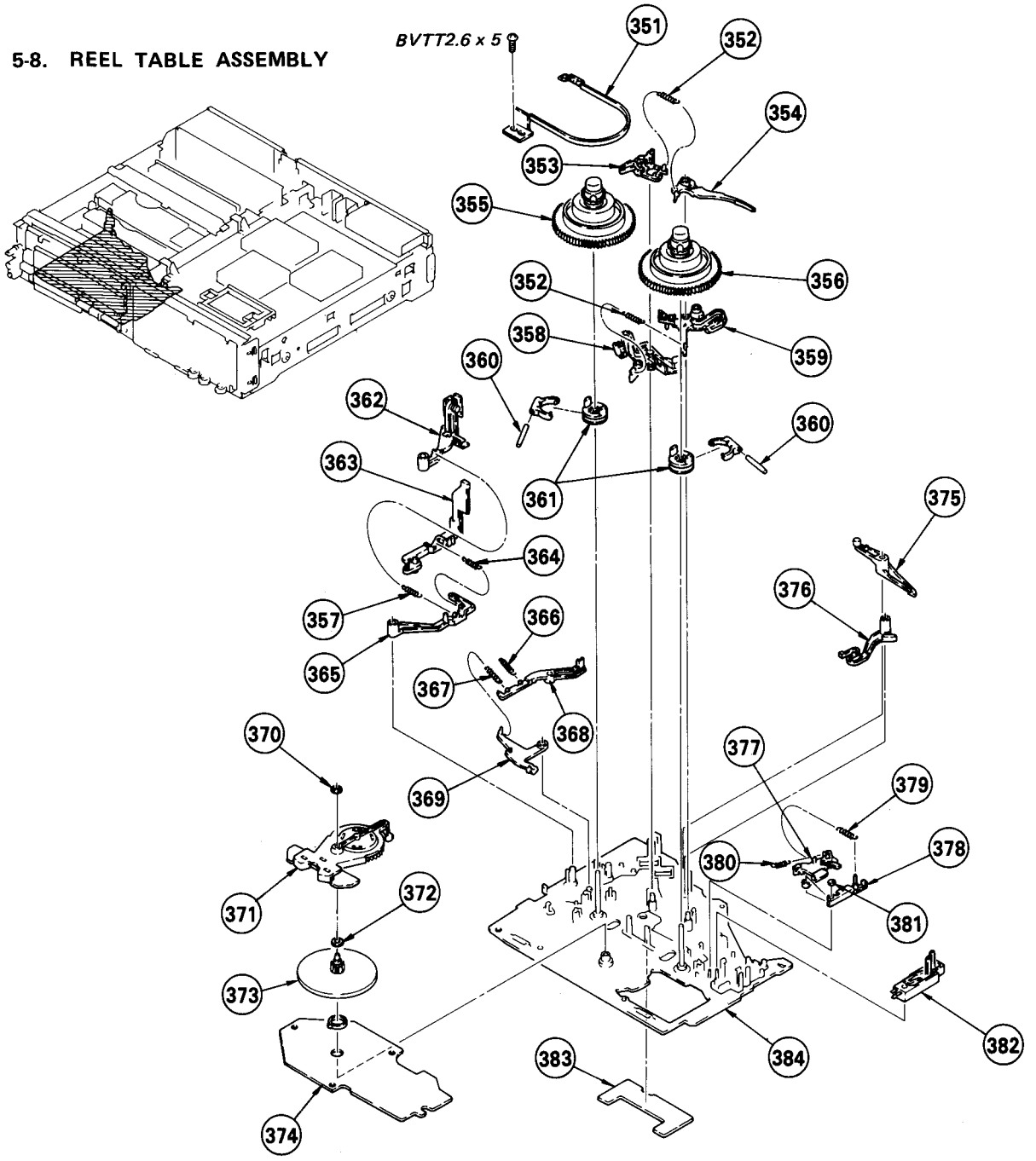

No.	Part No.	Description	Remark
351	X-3679-120-0	BAND ASSY, TENSION REGULATOR	
352	3-696-395-01	SPRING, TENSION	
353	*3-696-436-01	ARM, S SOFT BRAKE	
354	X-3684-137-1	BRAKE ASSY, T SOFT	
355	X-3691-627-1	TABLE ASSY, REEL, SUPPLY	
356	X-3691-626-1	TABLE ASSY, REEL, TAKE-UP	
357	3-684-235-01	SPRING, TENSION	
358	X-3696-310-1	BRAKE ASSY, S	
359	X-3696-311-1	BRAKE ASSY, T	
360	*3-691-681-01	SHAFT, ARM, UD	
361	*3-696-386-01	RING, UD	
362	1-464-527-13	S COIL SENSOR	
363	X-3696-312-1	LEVER ASSY, TENSION REGULATOR	
364	3-696-396-01	SPRING, TENSION	
365	*3-696-435-01	LEVER, FUNCTION	
366	3-696-394-01	SPRING, TENSION	
367	3-691-776-01	SPRING, TENSION	
368	*3-696-478-01	DETECTOR, S CLUTCH	

No.	Part No.	Description	Remark
369	*3-696-437-01	LEVER, S LIMITER	
370	3-669-595-00	WASHER (2), STOPPER	
371	A-6759-074-A	ARM BLOCK ASSY, PENDULUM	
372	3-679-318-00	WASHER, PENDULUM ARM	
373	X-2622-205-1	ROTOR ASSY, R	
374	*A-4910-063-A	R STATOR (REEL MOTOR) BOARD, COMPLETE	
375	X-3696-315-1	SENSOR ASSY, RING	
376	3-696-438-01	ARM, PENDULUM STOPPER	
377	*3-691-728-01	LEVER, RD	
378	*X-3691-601-3	ARM ASSY, RD	
379	3-696-398-01	SPRING, TENSION	
380	3-696-397-01	SPRING, TENSION	
381	3-691-680-01	WASHER, STOPPER	
382	1-554-839-11	SWITCH, LEAF (2 GANG) (REC PROOF, CASSETT IN) S901	
383	*1-616-599-11	RD-17 BOARD	
384	*X-3696-336-3	CHASSIS ASSY, SUB	

5-9. CHASSIS ASSEMBLY (2)

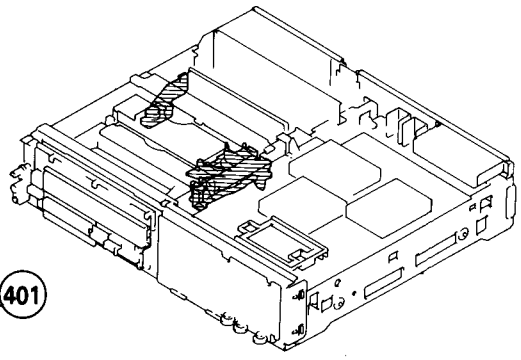

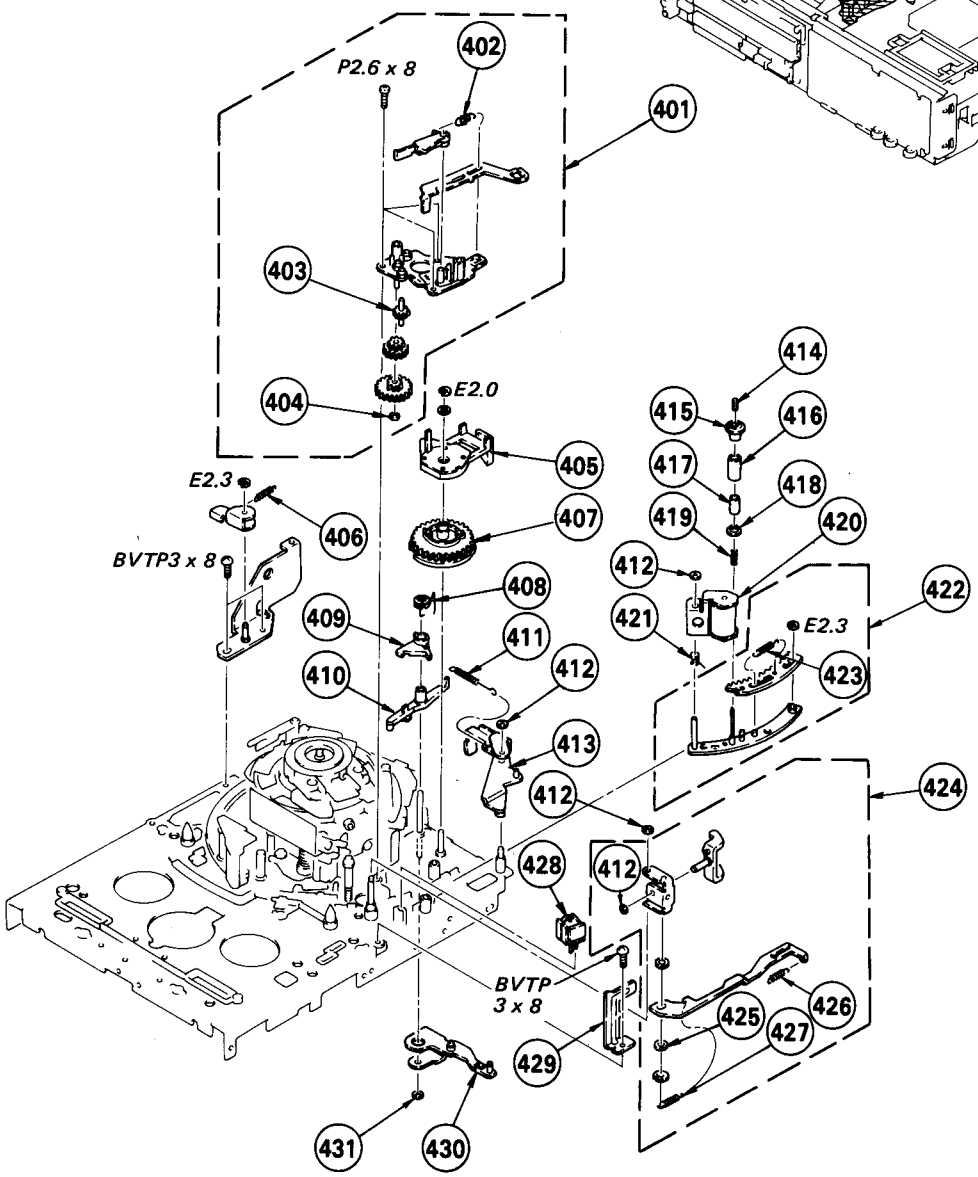

No.	Part No.	Description	Remark
401	A-6750-190-A	CHASSIS BLOCK ASSY, GEAR	402-404
402	3-696-376-01	SPRING, TENSION (FLAG)	
403	X-3679-148-0	GEAR (F) ASSY (D)	
404	3-669-465-00	WASHER (1.5), STOPPER	
405	1-570-394-21	SWITCH, ROTARY (ROTARY ENCODER)	S902
406	3-140-263-XX	SPRING, TENSION	
407	3-696-509-01	CAM (S), FUNCTION	
408	3-696-343-01	SPRING	
409	3-696-337-01	INVERTOR, LOCK ARM	
410	X-3696-319-1	ARM ASSY, LOCK	
411	3-696-344-01	SPRING (EJECT), TENSION	
412	3-669-596-00	WASHER (2.3), STOPPER	
413	X-3696-328-1	STOPPER ASSY, EJECT	
414	3-694-230-01	SCREW (2X2.5), FLANGE	
415	3-676-650-00	FLANGE (UPPER) (#9), GUIDE	
416	3-676-649-11	ROLLER (#9), GUIDE	
417	3-672-559-00	SLEEVE, GUIDE	
418	3-669-432-00	FLANGE (LOWER) (#9), GUIDE	
419	3-669-452-00	SPRING, COMPRESSION	
420	X-3691-646-1	ARM ASSY, PINCH ROLLER	
421	3-696-406-01	SPRING (CAM)	
422	X-3696-329-1	GEAR ASSY, SLIDER	423
423	3-549-014-00	SPRING, TENSION	
424	A-6759-255-A	ARM BLOCK ASSY, PRESS	412, 425-427
425	3-679-318-11	WASHER, PENDULUM ARM	
426	3-696-374-01	SPRING, TENSION(F PLATE RETURN)	
427	3-696-375-01	SPRING, TENSION (PRESS ARM)	
428	1-464-526-12	T COIL SENSOR	
429	*3-696-328-01	PLATE, LID OPEN	
430	*X-3696-309-1	LEVER ASSY, CAM	
431	3-669-595-00	WASHER (2), STOPPER	

5-10. S LOADING ASSEMBLY

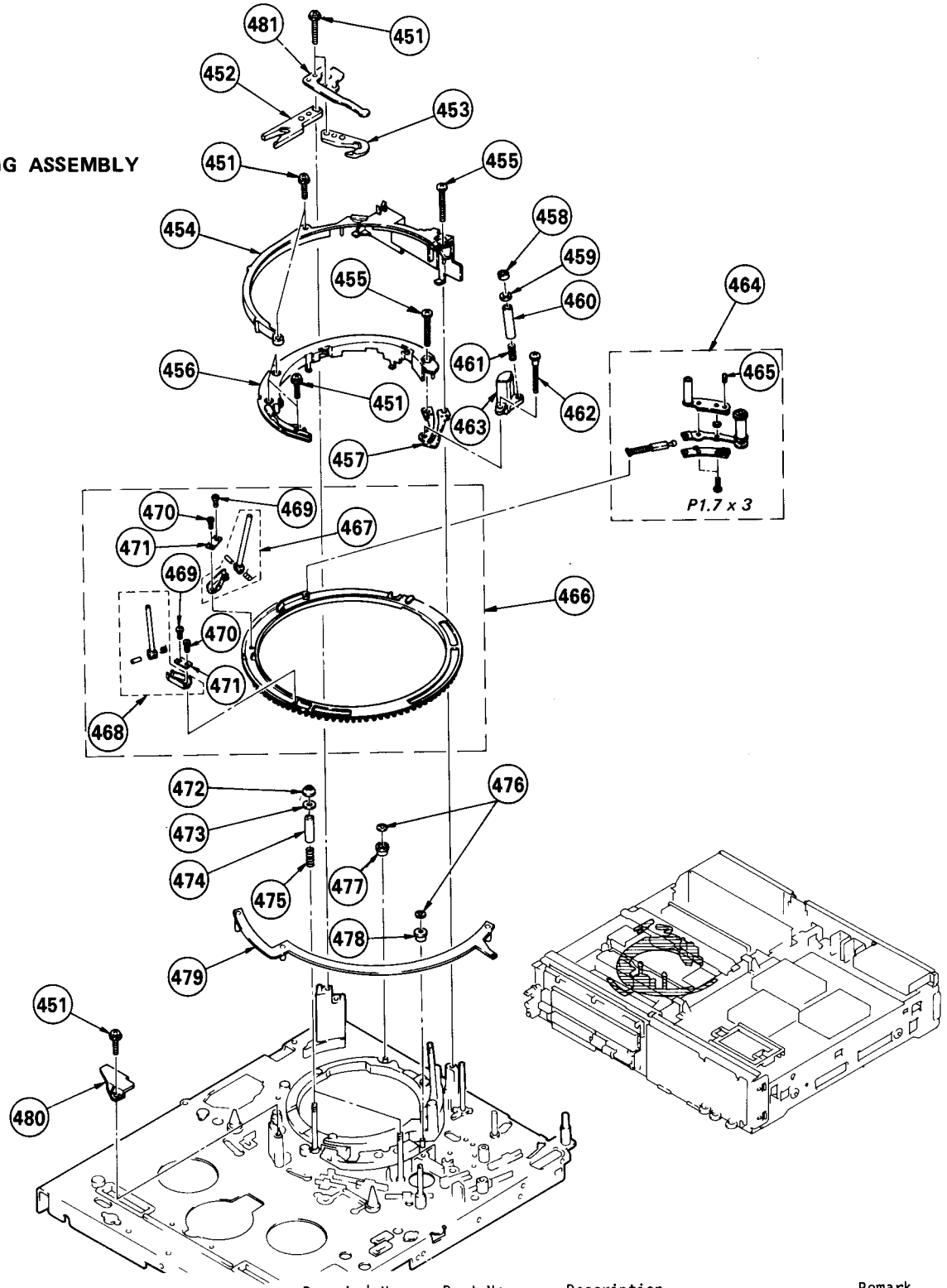

No.	Part No.	Description	Remark
451	3-669-480-11	+ PTPWH 2	
452	*3-669-618-00	PLATE (2), ADJUST	
453	*3-672-507-00	PLATE (3-1), ADJUSTMENT	
454	3-684-217-04	GUIDE (2), SHUTTLE	
455	3-669-466-21	SCREW (M 2.6)	
456	*3-679-290-00	GUIDE (1-YA), SHUTTLE	
457	*X-3679-263-1	BASE ASSY, SLANT	
458	3-669-446-00	NUT, GUIDE, NO. 6	
459	3-679-910-00	FLANGE (S), GUIDE, NUMBER 6	
460	3-691-830-01	SLEEVE, GUIDE, #6	
461	3-669-615-00	SPRING, COMPRESSION	
462	3-669-606-00	SCREW (2.6)	
463	8-825-508-10	HEAD, FE	
464	A-6750-108-B	SHUTTLE (2) BLOCK ASSY	465
465	3-694-230-01	SCREW (2X2.5), FLANGE	
466	X-3696-337-1	RING (CAM) ASSY, S THREADING	467-470

No.	Part No.	Description	Remark
467	*X-3669-430-0	HOLDER BLOCK ASSY, #3 GUIDE	
468	*X-3669-429-0	HOLDER BLOCK ASSY, #2 GUIDE	
469	3-669-478-00	SCREW (1X3), TAPPING	
470	3-672-586-00	SCREW (1.4X3), TAPPING	
471	*3-669-472-02	RETAINER, SPRING, LEAF	
472	3-669-318-21	NUT, ADJUSTMENT, GUIDE	
473	3-684-135-01	WASHER (UPPER), GUIDE, #7, 8	
474	3-684-133-01	SLEEVE, GUIDE, #7, 8	
475	3-684-290-01	SPRING, COMPRESSION	
476	3-669-465-00	WASHER (1.5), STOPPER	
477	3-669-360-00	ROLLER, RING	
478	3-669-597-00	ROLLER (B), RING	
479	*X-3696-327-1	PLATE ASSY, FUNCTION	
480	3-669-476-04	PLATE, GUIDE	
481	*3-684-158-01	PLATE, GROUND, TAPE GUIDE	

5-11. DRUM ASSEMBLY

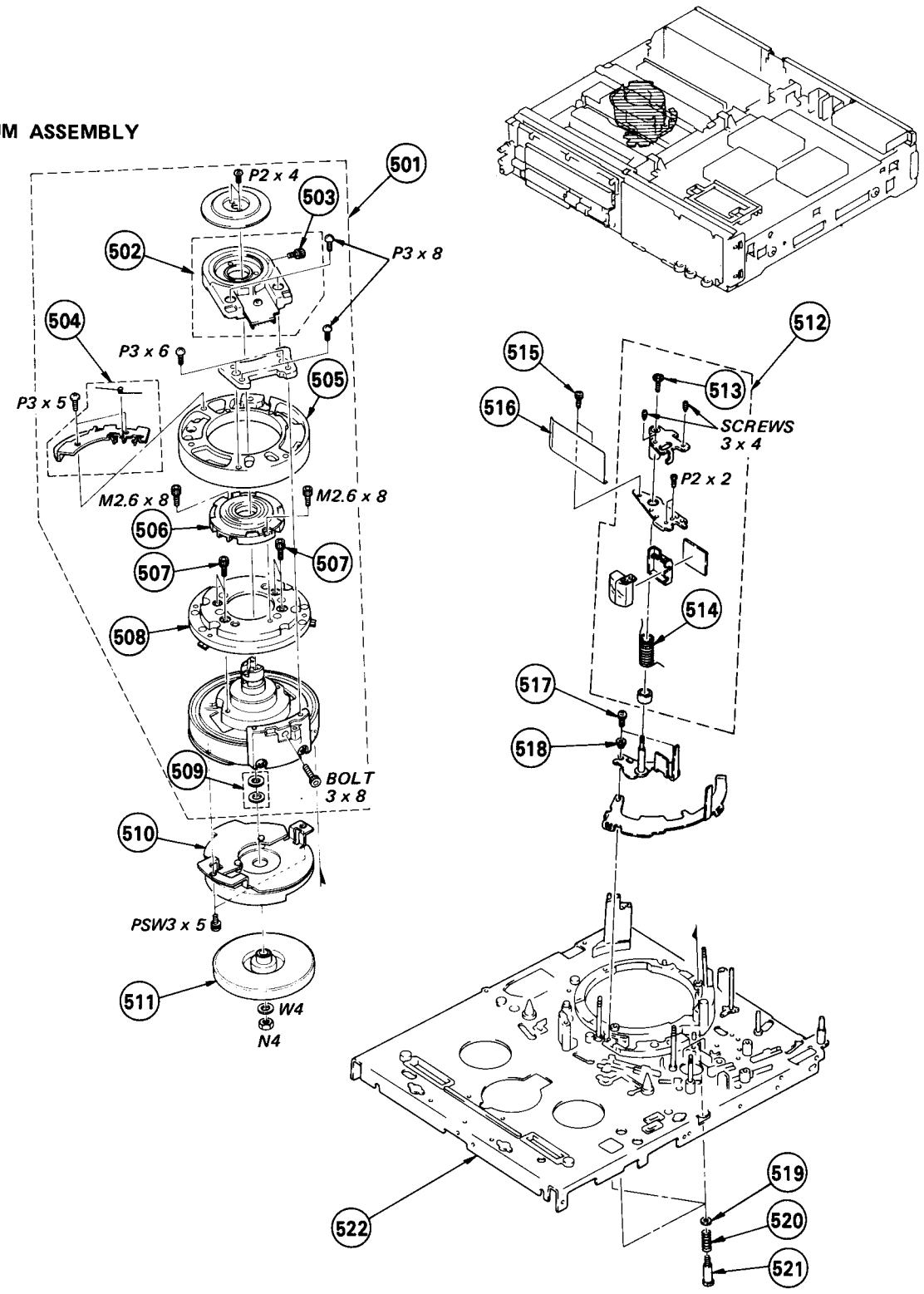

No.	Part No.	Description	Remark
501	A-6050-387-A	DRUM ASSY (DSH-78A-R)	502-509
502	A-6050-237-C	GUIDE ARM ASSY	503
503	3-681-360-01	SCREW, SPRING WASHER	
504	A-6760-066-B	SPRING ASSY, TAPE RETAINER	
505	A-6760-178-A	DRUM SUB ASSY, UPPER	
506	X-3681-312-1	COUPLER ASSY, ROTARY	
507	3-669-157-00	BOLT (WASHER) (2.6X8)	
508	A-6762-260-A	DISK ASSY (DSR-78-R)	
509	X-3669-105-0	SPACER BLOCK ASSY	
510	X-2621-204-2	STATOR ASSY, D	
511	X-2621-202-1	ROTOR ASSY, D	

No.	Part No.	Description	Remark
512	A-6761-093-A	ACE ASSY	513, 514
513	3-696-500-02	SCREW, ADJUSTMENT, HEIGHT	
514	3-696-408-01	SPRING, TORSION	
515	3-696-516-01	SCREW (2X4), SW (ISO) (+) P	
516	3-696-517-02	PROTECTOR	
517	3-693-439-01	SCREW (P2.6X12), (+)	
518	3-684-247-01	BUSHING, ACE	
519	3-669-600-11	WASHER, FLAT (3.5)	
520	3-429-123-00	SPRING	
521	3-694-212-01	SCREW, FITTING	
522	*X-3696-339-4	CHASSIS ASSY, MECHANICAL	

5-12. HARDWARE LIST

Ref.No	Part No.	Description	Remark
		SCREW	
	7-621-257-55	SCREW +P 2.3X8	
	7-621-770-87	SCREW +P 2.6X5	
	7-627-552-38	SCREW, PRECISION +P 1.7X3	
	7-627-553-18	SCREW, PRECISION +P 2X2	
	7-627-554-07	SCREW, PRECISION +P 2X2.2	
	7-628-254-15	SCREW +PS 2.6X6	
	7-682-248-09	SCREW +K 3X8	
	7-682-251-09	SCREW +K 3X14	
	7-682-545-04	SCREW +P 3X4	
	7-682-647-01	SCREW +PS 3X6	
	7-682-648-01	SCREW +PS 3X8	
	7-685-132-11	SCREW +P 2.6X5 TYPE2 NON-SLIT	
	7-685-134-14	SCREW +P 2.6X8 TYPE2 NON-SLIT	
	7-685-645-71	SCREW +BVTP 3X6 TYPE2 IT-3	
	7-685-645-81	SCREW +BVTP 3X6 TYPE2	
	7-685-646-71	SCREW +BVTP 3X8 TYPE2 IT-3	
	7-685-646-81	SCREW +BVTP 3X8 TYPE2	
	7-685-649-71	SCREW +BVTP 3X14 TYPE2 IT-3	
	7-685-649-81	SCREW +BVTP 3X14 TYPE2	
	7-685-791-04	SCREW +BVTT 2.6X5 (S)	
		SET-SCREW	
	7-621-712-46	SET-SCREW, SLOT 2.6X5FLAT POINT	
	7-683-174-21	SET-SCREW, SLOT 3X4 CONE POINT	
		STOP RING	
	7-624-104-04	STOP RING 2.0, TYPE -E	
	7-624-105-04	STOP RING 2.3, TYPE -E	
	7-624-106-04	STOP RING 3.0, TYPE -E	
	7-624-109-04	STOP RING 5.0, TYPE -E	
	7-624-111-04	STOP RING 7.0, TYPE -E	
		WASHER	
	7-623-422-07	LW3, TYPE B	
	7-688-002-11	W 2.6, MIDDLE	

SECTION 6
ELECTRICAL PARTS LIST

NOTE:

The components identified by shading and mark ⚠ are critical for safety. Replace only with part number specified.

When indicating parts by reference number, please include the board name.

- Due to standardization, replacements in the parts list may be different from the parts specified in the diagrams or the components used on the set.
- All variable and adjustable resistors have characteristic curve B, unless otherwise noted.

RESISTORS
- All resistors are in ohms
- F : nonflammable

- Items marked "*" are not stocked since they are seldom required for routine service. Some delay should be anticipated when ordering these items.

CAPACITORS
- MF : μF, PF : μμF

COILS
- MMH : mH, UH : μH

Ref.No	Part No.	Description				Remark
	A-4910-063-A	R STATOR (REEL MOTOR) BOARD, COMPLETE				
		**********				
	*1-560-461-00	PIN, CONNECTOR 5P				
		CAPACITOR				
C1	1-123-821-00	ELECT	47MF		20%	16V
C2	1-123-821-00	ELECT	47MF		20%	16V
C3	1-123-821-00	ELECT	47MF		20%	16V
C4	1-123-821-00	ELECT	47MF		20%	16V
		DIODE				
H1	8-719-800-31	DIODE THS103A-1				
H2	8-719-800-31	DIODE THS103A-1				
		IC				
IC1	8-759-801-97	IC LB1615				
		RESISTOR				
R1	1-247-823-00	CARBON	470	5%	1/6W	
R2	1-249-429-11	CARBON	10K	5%	1/6W	
R3	1-249-437-11	CARBON	47K	5%	1/6W	
R4	1-249-437-11	CARBON	47K	5%	1/6W	
R5	1-249-437-11	CARBON	47K	5%	1/6W	
R6	1-249-437-11	CARBON	47K	5%	1/6W	
**********						
	*A-6711-658-A	YC-40 BOARD, COMPLETE				
		**********				
		BAND PASS FILTER				
BPF001	1-235-098-00	FILTER, BAND PASS				
		CAPACITOR				
C010	1-123-356-00	ELECT	10MF		20%	16V
C013	1-123-306-00	ELECT	47MF	20%	10V	(ES MODEL)
C014	1-123-369-00	ELECT	4.7MF	20%	25V	(ES MODEL)
C015	1-123-306-00	ELECT	47MF	20%	10V	(ES MODEL)
C016	1-108-589-00	MYLAR	0.027MF	5%	50V	(ES MODEL)
C017	1-101-004-00	CERAMIC	0.01MF		50V	(ES MODEL)
C018	1-123-306-00	ELECT	47MF	20%	10V	(ES MODEL)
C019	1-101-004-00	CERAMIC	0.01MF		50V	(ES MODEL)
C020	1-101-004-00	CERAMIC	0.01MF			50V
C021	1-101-004-00	CERAMIC	0.01MF			50V
C023	1-101-882-00	CERAMIC	51PF		5%	50V
C024	1-130-047-00	FILM	180PF		5%	50V
C025	1-106-172-00	MYLAR	0.001MF		5%	50V
C026	1-101-059-21	CERAMIC	510PF		5%	50V
C027	1-161-045-00	CERAMIC	0.0033MF		10%	25V
C028	1-106-172-00	MYLAR	0.001MF		5%	50V
C029	1-123-382-00	ELECT	3.3MF		20%	50V
C032	1-102-816-00	CERAMIC	120PF		5%	50V

Ref.No	Part No.	Description				Remark
C033	1-101-004-00	CERAMIC	0.01MF			50V
C034	1-101-004-00	CERAMIC	0.01MF			50V
C035	1-102-816-00	CERAMIC	120PF		5%	50V
C036	1-101-882-00	CERAMIC	51PF		5%	50V
C037	1-101-004-00	CERAMIC	0.01MF			50V
C038	1-101-004-00	CERAMIC	0.01MF			50V
C039	1-101-004-00	CERAMIC	0.01MF			50V
C041	1-161-043-00	CERAMIC	0.0022MF		10%	25V
C042	1-102-516-00	CERAMIC	27PF	5%	50V	(ES MODEL)
C043	1-101-004-00	CERAMIC	0.01MF		50V	(ES MODEL)
C044	1-101-004-00	CERAMIC	0.01MF		50V	(ES MODEL)
C045	1-102-523-00	CERAMIC	56PF	5%	50V	(ES MODEL)
C046	1-101-004-00	CERAMIC	0.01MF		50V	(ES MODEL)
C048	1-101-004-00	CERAMIC	0.01MF		50V	(ES MODEL)
C049	1-101-004-00	CERAMIC	0.01MF			50V
C050	1-102-865-00	CERAMIC	8PF		0.5PF	50V
C051	1-102-525-00	CERAMIC	68PF		5%	50V
C052	1-102-525-00	CERAMIC	68PF		5%	50V
C053	1-123-380-00	ELECT	1MF		20%	50V
C054	1-161-040-00	CERAMIC	0.0012MF		10%	25V
C055	1-123-380-00	ELECT	1MF		20%	50V
C056	1-102-963-00	CERAMIC	33PF		5%	50V
C057	1-102-980-00	CERAMIC	270PF		5%	50V
C058	1-123-306-00	ELECT	47MF		20%	10V
C059	1-101-004-00	CERAMIC	0.01MF			50V
C060	1-108-579-00	MYLAR	0.01MF		5%	50V
C061	1-123-382-00	ELECT	3.3MF		20%	50V
C062	1-123-306-00	ELECT	47MF		20%	10V
C063	1-101-004-00	CERAMIC	0.01MF			50V
C064	1-102-521-00	CERAMIC	43PF		5%	50V
C065	1-102-525-00	CERAMIC	68PF		5%	50V
C066	1-102-525-00	CERAMIC	68PF		5%	50V
C068	1-101-004-00	CERAMIC	0.01MF			50V
C069	1-102-962-00	CERAMIC	30PF		5%	50V
C070	1-101-004-00	CERAMIC	0.01MF			50V
C071	1-123-380-00	ELECT	1MF		20%	50V
C072	1-101-004-00	CERAMIC	0.01MF			50V
C073	1-102-525-00	CERAMIC	68PF		5%	50V
C074	1-102-525-00	CERAMIC	68PF		5%	50V
C075	1-101-004-00	CERAMIC	0.01MF			50V
C076	1-102-951-00	CERAMIC	15PF		5%	50V
C077	1-123-330-00	ELECT	22MF		20%	16V
C078	1-123-330-00	ELECT	22MF		20%	16V
C079	1-102-852-00	CERAMIC	47PF		5%	50V
C080	1-101-004-00	CERAMIC	0.01MF			50V
C082	1-161-024-00	CERAMIC	0.082MF		10%	25V
C083	1-102-977-00	CERAMIC	200PF		5%	50V
C084	1-123-369-00	ELECT	4.7MF		20%	25V
C085	1-101-004-00	CERAMIC	0.01MF			50V
C086	1-106-174-00	MYLAR	0.0012MF		5%	50V
C087	1-161-057-00	CERAMIC	0.033MF		10%	25V
C092	1-101-004-00	CERAMIC	0.01MF			50V
C093	1-101-006-00	CERAMIC	0.047MF			50V

YC-40

Ref.No	Part No.	Description			Remark
C094	1-101-006-00	CERAMIC	0.047MF		50V
C095	1-102-976-00	CERAMIC	180PF	5%	50V
C096	1-102-824-00	CERAMIC	470PF	5%	50V
C097	1-102-823-00	CERAMIC	430PF	5%	50V
C098	1-102-820-00	CERAMIC	330PF	5%	50V
C099	1-102-525-00	CERAMIC	68PF	5%	50V
C101	1-108-812-91	MYLAR	0.047MF	5%	50V
C102	1-161-043-00	CERAMIC	0.0022MF	10%	25V
C103	1-106-172-00	MYLAR	0.001MF	5%	50V
C104	1-102-977-00	CERAMIC	200PF	5%	50V
C105	1-102-973-00	CERAMIC	100PF	5%	50V
C106	1-123-356-00	ELECT	10MF	20%	16V
C107	1-161-025-00	CERAMIC	0.1MF	10%	25V
C108	1-101-004-00	CERAMIC	0.01MF		50V
C111	1-101-882-00	CERAMIC	51PF	5%	50V
C112	1-101-004-00	CERAMIC	0.01MF		50V
C113	1-101-006-00	CERAMIC	0.047MF		50V
C114	1-101-880-00	CERAMIC	47PF	5%	50V
C116	1-101-004-00	CERAMIC	0.01MF		50V
C117	1-101-361-00	CERAMIC	150PF	5%	50V
C120	1-101-004-00	CERAMIC	0.01MF		50V
C121	1-101-004-00	CERAMIC	0.01MF		50V
C122	1-101-004-00	CERAMIC	0.01MF		50V
C123	1-101-004-00	CERAMIC	0.01MF		50V
C124	1-102-948-21	CERAMIC	11PF	5%	50V
C125	1-123-330-00	ELECT	22MF	20%	16V
C129	1-123-330-00	ELECT	22MF	20%	16V
C130	1-123-356-00	ELECT	10MF	20%	16V
C131	1-123-380-00	ELECT	1MF	20%	50V
C132	1-123-369-00	ELECT	4.7MF	20%	25V
C134	1-102-820-00	CERAMIC	330PF	5%	50V
C135	1-102-823-00	CERAMIC	430PF	5%	50V
C136	1-102-976-00	CERAMIC	180PF	5%	50V
C142	1-123-330-00	ELECT	22MF	20%	16V
C144	1-102-508-00	CERAMIC	10PF	0.5PF	50V
C145	1-102-521-00	CERAMIC	43PF	5%	50V
C146	1-102-521-00	CERAMIC	43PF	5%	50V
C147	1-102-508-00	CERAMIC	10PF	0.5PF	50V
C148	1-101-006-00	CERAMIC	0.047MF		50V
C155	1-101-004-00	CERAMIC	0.01MF		50V
C156	1-101-004-00	CERAMIC	0.01MF		50V
C159	1-102-822-00	CERAMIC	390PF	5%	50V
C178	1-123-307-00	ELECT	100MF	20%	10V
C179	1-123-307-00	ELECT	100MF	20%	10V
C180	1-123-332-00	ELECT	47MF	20%	16V
C183	1-101-006-00	CERAMIC	0.047MF		50V
C191	1-101-004-00	CERAMIC	0.01MF		50V
C192	1-123-330-00	ELECT	22MF	20%	16V
C196	1-123-380-00	ELECT	1MF	20%	50V
C197	1-123-356-00	ELECT	10MF	20%	16V
C200	1-101-004-00	CERAMIC	0.01MF		50V
C203	1-101-004-00	CERAMIC	0.01MF		50V
C204	1-123-369-00	ELECT	4.7MF	20%	25V

Ref.No	Part No.	Description			Remark
C206	1-101-004-00	CERAMIC	0.01MF		50V
C207	1-161-025-00	CERAMIC	0.1MF	10%	25V
C208	1-123-356-00	ELECT	10MF	20%	16V
C212	1-123-333-00	ELECT	100MF	20%	16V
C217	1-101-006-00	CERAMIC	0.047MF		50V
C219	1-123-356-00	ELECT	10MF	20%	16V
C220	1-101-006-00	CERAMIC	0.047MF		50V
C232	1-101-004-00	CERAMIC	0.01MF	50V	(E MODEL)
C233	1-123-380-00	ELECT	1MF 20%	50V	(E MODEL)
C248	1-101-006-00	CERAMIC	0.047MF		50V
C251	1-101-006-00	CERAMIC	0.047MF		50V
C252	1-102-816-00	CERAMIC	120PF	5%	50V
C253	1-123-356-00	ELECT	10MF	20%	16V
C257	1-101-006-00	CERAMIC	0.047MF		50V
C261	1-123-330-00	ELECT	22MF	20%	16V
C300	1-101-004-00	CERAMIC	0.01MF	50V	(ES MODEL)
C301	1-101-006-00	CERAMIC	0.047MF		50V
C302	1-102-773-00	CERAMIC	330PF	5%	50V
C303	1-161-047-00	CERAMIC	0.0047MF	10%	25V
C401	1-123-381-00	ELECT	2.2MF	20%	50V
C402	1-101-001-00	CERAMIC	0.001MF		50V
C403	1-101-001-00	CERAMIC	0.001MF		50V
C404	1-101-004-00	CERAMIC	0.01MF		50V
C405	1-123-330-00	ELECT	22MF	20%	16V
C406	1-123-330-00	ELECT	22MF	20%	16V
C407	1-102-962-00	CERAMIC	30PF	5%	50V
C408	1-101-888-00	CERAMIC	68PF	5%	50V
C409	1-123-381-00	ELECT	2.2MF	20%	50V
C410	1-102-936-00	CERAMIC	3PF	0.25PF	50V
C411	1-101-005-00	CERAMIC	0.022MF		50V
C412	1-123-318-00	ELECT	33MF	20%	16V
C414	1-123-356-00	ELECT	10MF	20%	16V
C417	1-102-948-00	CERAMIC	11PF	5%	50V
C418	1-102-965-00	CERAMIC	39PF	5%	50V
C419	1-123-356-00	ELECT	10MF	20%	16V
C420	1-123-369-00	ELECT	4.7MF	20%	25V
C501	1-101-004-00	CERAMIC	0.01MF		50V
C502	1-101-004-00	CERAMIC	0.01MF		50V
C503	1-101-004-00	CERAMIC	0.01MF		50V
C504	1-161-055-00	CERAMIC	0.022MF	10%	25V
C505	1-102-822-00	CERAMIC	390PF	5%	50V
C506	1-101-006-00	CERAMIC	0.047MF		50V
C507	1-123-330-00	ELECT	22MF	20%	16V
C613	1-101-004-00	CERAMIC	0.01MF	50V	(ES MODEL)
C701	1-102-530-00	CERAMIC	120PF	5%	50V
C702	1-123-380-00	ELECT	1MF	20%	50V
C703	1-123-380-00	ELECT	1MF	20%	50V
C704	1-123-380-00	ELECT	1MF	20%	50V
C705	1-123-380-00	ELECT	1MF	20%	50V
C720	1-101-004-00	CERAMIC	0.01MF		50V
C721	1-123-356-00	ELECT	10MF	20%	16V
C722	1-123-369-00	ELECT	4.7MF	20%	25V
C723	1-161-057-00	CERAMIC	0.033MF	10%	25V

When indicating parts by reference number, please include the board name.

Ref.No	Part No.	Description			Remark
C731	1-101-004-00	CERAMIC	0.01MF		50V
C732	1-101-004-00	CERAMIC	0.01MF		50V
C733	1-101-004-00	CERAMIC	0.01MF		50V
C740	1-101-004-00	CERAMIC	0.01MF		50V
C741	1-101-006-00	CERAMIC	0.047MF		50V
C743	1-102-904-91	CERAMIC	110PF	5%	50V
C744	1-123-330-00	ELECT	22MF	20%	16V
C745	1-102-518-00	CERAMIC	33PF	5%	50V
C746	1-102-511-00	CERAMIC	13PF	5%	50V
C751	1-123-330-00	ELECT	22MF	20%	16V
C752	1-101-004-00	CERAMIC	0.01MF		50V
C755	1-123-330-00	ELECT	22MF	20%	16V
C756	1-101-004-00	CERAMIC	0.01MF		50V
C757	1-123-330-00	ELECT	22MF	20%	16V
C758	1-101-004-00	CERAMIC	0.01MF		50V
C759	1-101-006-00	CERAMIC	0.047MF		50V
C760	1-101-006-00	CERAMIC	0.047MF	50V	(ES MODEL)
C761	1-102-128-21	CERAMIC	0.0082MF	10%	50V
C762	1-102-824-00	CERAMIC	470PF	5%	50V
C763	1-123-330-00	ELECT	22MF	20%	16V
C765	1-123-356-00	ELECT	10MF	20%	16V
C766	1-102-973-00	CERAMIC	100PF	5%	50V
C767	1-123-330-00	ELECT	22MF	20%	16V
C768	1-124-343-00	ELECT	2200MF	20%	16V
C769	1-161-013-00	CERAMIC	0.01MF	10%	25V
C770	1-102-525-00	CERAMIC	68PF	5%	50V
C771	1-123-356-00	ELECT	10MF	20%	16V
C772	1-123-356-00	ELECT	10MF	20%	16V
C773	1-123-356-00	ELECT	10MF	20%	16V
C801	1-102-865-00	CERAMIC	8PF	0.5PF	50V
C802	1-101-004-00	CERAMIC	0.01MF		50V
C803	1-123-330-00	ELECT	22MF	20%	16V
C804	1-123-306-00	ELECT	47MF	20%	6.3V
C805	1-101-001-00	CERAMIC	0.001MF		50V
C807	1-101-006-00	CERAMIC	0.047MF		50V
C809	1-101-004-00	CERAMIC	0.01MF		50V
C910	1-123-356-00	ELECT	10MF	20%	16V
C914	1-123-330-00	ELECT	22MF	20%	16V
C916	1-102-816-00	CERAMIC	120PF	5%	50V
C921	1-123-318-00	ELECT	33MF	20%	16V
C926	1-101-004-00	CERAMIC	0.01MF		50V
C927	1-161-025-00	CERAMIC	0.1MF	10%	25V
C928	1-161-025-00	CERAMIC	0.1MF	10%	25V
C929	1-123-330-00	ELECT	22MF	20%	16V
C930	1-123-356-00	ELECT	10MF	20%	16V
C931	1-123-356-00	ELECT	10MF	20%	16V
C932	1-124-475-11	ELECT	470MF	20%	16V
C933	1-123-356-00	ELECT	10MF	20%	16V
C934	1-123-356-00	ELECT	10MF	20%	16V
C935	1-124-473-11	ELECT	1000MF	20%	10V
C936	1-123-332-00	ELECT	47MF	20%	16V
C937	1-101-004-00	CERAMIC	0.01MF		50V
C943	1-123-356-00	ELECT	10MF	20%	16V

Ref.No	Part No.	Description			Remark
C944	1-123-333-00	ELECT	100MF	20%	16V
C945	1-124-473-11	ELECT	1000MF	20%	10V
C947	1-101-004-00	CERAMIC	0.01MF		50V
C951	1-101-004-00	CERAMIC	0.01MF		50V
C952	1-123-332-00	ELECT	47MF	20%	16V
C957	1-123-356-00	ELECT	10MF	20%	16V
C962	1-123-330-00	ELECT	22MF	20%	16V
		FILTER			
CF001	1-527-998-00	FILTER, CERAMIC (4.16MHz) (ES MODEL)			
CF002	1-527-875-00	FILTER, CERAMIC (5.12MHz)			
CF003	1-527-849-00	FILTER, CERAMIC (13.3MHz)			
		CONNECTOR			
CN001	*1-560-896-00	PIN, CONNECTOR 8P			
CN002	*1-564-030-00	PIN, CONNECTOR 5P			
CN003	*1-560-893-00	PIN, CONNECTOR 5P			
CN004	*1-564-031-00	PIN, CONNECTOR 6P			
CN005	*1-564-028-00	PIN, CONNECTOR 3P			
CN006	*1-564-028-00	PIN, CONNECTOR 3P			
CN007	*1-564-031-00	PIN, CONNECTOR 6P			
CN008	*1-564-037-21	PIN, CONNECTOR 12P			
CN009	*1-560-898-00	PIN, CONNECTOR 10P			
CN010	*1-564-037-31	PIN, CONNECTOR 12P			
CN011	*1-560-890-00	PIN, CONNECTOR 2P			
		JACK			
CNJ001	1-536-936-21	CONNECTOR BOARD, BNC			
CNJ003	1-561-534-00	SOCKET 21P			
		RRIMMER			
CV001	1-141-275-00	CAP, TRIMMER (8-20P)			
		DIODE			
D005	8-719-911-19	DIODE 1SS119 (ES MODEL)			
D006	8-719-000-06	DIODE MC921 (ES MODEL)			
D009	8-719-000-06	DIODE MC921 (ES MODEL)			
D012	8-719-911-19	DIODE 1SS119 (ES MODEL)			
D013	8-719-911-19	DIODE 1SS119			
D014	8-719-911-19	DIODE 1SS119			
D016	8-719-000-12	DIODE MC931			
D017	8-719-911-19	DIODE 1SS119			
D018	8-719-911-19	DIODE 1SS119			
D019	8-719-911-19	DIODE 1SS119			
D020	8-719-911-19	DIODE 1SS119			
D021	8-719-911-19	DIODE 1SS119			
D022	8-719-911-19	DIODE 1SS119			
D025	8-719-911-19	DIODE 1SS119			
D027	8-719-000-06	DIODE MC921			
D029	8-719-100-56	DIODE RD10EB1			
D040	8-719-100-40	DIODE RD6.8EB1			
D190	8-719-911-19	DIODE 1SS119			

When indicating parts by reference number, please include the board name.

YC-40

Ref.No	Part No.	Description	Remark
D703	8-719-911-19	DIODE 1SS119	
D704	8-719-911-19	DIODE 1SS119	
D705	8-719-911-19	DIODE 1SS119	
D706	8-719-911-19	DIODE 1SS119	
D707	8-719-911-19	DIODE 1SS119	
D801	8-719-911-19	DIODE 1SS119	
D802	8-719-911-19	DIODE 1SS119	
D803	8-719-911-19	DIODE 1SS119	
D804	8-719-911-19	DIODE 1SS119	
D805	8-719-911-19	DIODE 1SS119	
D806	8-719-911-19	DIODE 1SS119	
D809	8-719-911-19	DIODE 1SS119	
D810	8-719-911-19	DIODE 1SS119	
D811	8-719-102-88	DIODE RD9.1EN3	
D909	8-719-200-02	DIODE 10E-2	
D915	8-719-911-19	DIODE 1SS119	
		DELAY LINE	
DL001	1-415-313-00	DELAY LINE (1H)	
DL401	1-415-352-11	DELAY LINE, 1H	
DL501	1-415-419-11	DELAY LINE	
		IC	
IC001	8-759-909-20	IC BA634 (ES MODEL)	
IC002	8-759-904-95	IC BA7007 (ES MODEL)	
IC003	8-759-202-47	IC CX10023	
IC004	8-759-208-94	IC CX-894 (ES MODEL)	
IC005	8-752-006-10	IC CX20061 (ES MODEL)	
IC006	8-759-203-99	IC CX10021B-NP	
IC009	8-759-101-62	IC CX20043	
IC011	8-752-006-10	IC CX20061	
IC020	8-759-045-38	IC MC14538BCP	
IC401	8-758-662-00	IC CX-866B	
IC901	8-759-979-26	IC CX-7926	
		COIL	
L001	1-410-450-11	MICRO INDUCTOR 3.9MMH	
L002	1-410-411-11	MICRO INDUCTOR 2.2UH	
L003	1-408-408-00	MICRO INDUCTOR 8.2UH	
L004	1-408-406-00	MICRO INDUCTOR 5.6UH	
L005	1-408-415-00	MICRO INDUCTOR 33UH	
L006	1-408-426-00	MICRO INDUCTOR 270UH	
L007	1-408-427-00	MICRO INDUCTOR 330UH	
L008	1-408-421-00	MICRO INDUCTOR 100UH	
L009	1-408-417-00	MICRO INDUCTOR 47UH	
L011	1-408-423-00	MICRO INDUCTOR 150UH	
L012	1-408-409-00	MICRO INDUCTOR 10UH	
L014	1-408-422-00	MICRO INDUCTOR 120UH	
L016	1-408-409-00	MICRO INDUCTOR 10UH	
L017	1-408-423-00	MICRO INDUCTOR 150UH	
L021	1-408-421-00	MICRO INDUCTOR 100UH	
L022	1-408-423-00	MICRO INDUCTOR 150UH	

Ref.No	Part No.	Description	Remark
L023	1-408-421-00	MICRO INDUCTOR 100UH	
L036	1-408-429-00	MICRO INDUCTOR 470UH	
L050	1-408-414-00	MICRO INDUCTOR 27UH	
L051	1-408-417-00	MICRO INDUCTOR 47UH	
L052	1-408-420-00	MICRO INDUCTOR 82UH	
L053	1-408-423-00	MICRO INDUCTOR 150UH	
L055	1-408-409-00	MICRO INDUCTOR 10UH	
L401	1-408-397-00	MICRO INDUCTOR 1UH	
L402	1-408-397-00	MICRO INDUCTOR 1UH	
L501	1-408-408-00	MICRO INDUCTOR 8.2UH	
L701	1-408-415-00	MICRO INDUCTOR 33UH	
L720	1-410-122-11	MICRO INDUCTOR 1.8MMH	
L801	1-408-421-00	MICRO INDUCTOR 100UH	
L802	1-408-414-00	MICRO INDUCTOR 27UH	
		LOW PASS FILTER	
LPF001	1-235-097-00	FILTER, LOW PASS	
		VARIABLE COIL	
LV001	1-407-291-00	MICRO INDUCTOR 15MMH (ES MODEL)	
LV002	1-408-532-00	COIL, VARIABLE (ES MODEL)	
LV003	1-408-513-00	COIL (VARIABLE) (ES MODEL)	
LV501	1-408-512-00	COIL (VARIABLE)	
		IC LINK	
PS001	⚠1-532-685-11	LINK, IC	
		TRANSISTOR	
Q010	8-729-177-43	TRANSISTOR 2SD774	
Q011	8-729-204-83	TRANSISTOR 2SA1048	
Q014	8-729-113-33	TRANSISTOR 2SB733	
Q015	8-729-900-80	TRANSISTOR DTC114ES	
Q016	8-729-245-83	TRANSISTOR 2SC2458	
Q019	8-729-204-83	TRANSISTOR 2SA1048 (ES MODEL)	
Q020	8-729-204-83	TRANSISTOR 2SA1048	
Q021	8-729-245-83	TRANSISTOR 2SC2458 (ES MODEL)	
Q022	8-729-245-83	TRANSISTOR 2SC2458	
Q023	8-729-245-83	TRANSISTOR 2SC2458	
Q024	8-729-204-83	TRANSISTOR 2SA1048	
Q025	8-729-900-85	TRANSISTOR DTC144WS (ES MODEL)	
Q026	8-729-204-83	TRANSISTOR 2SA1048	
Q027	8-729-204-83	TRANSISTOR 2SA1048 (ES MODEL)	
Q028	8-729-245-83	TRANSISTOR 2SC2458	
Q029	8-729-245-83	TRANSISTOR 2SC2458 (ES MODEL)	
Q030	8-729-245-83	TRANSISTOR 2SC2458	
Q031	8-729-900-36	TRANSISTOR DTC124ES	
Q033	8-729-245-83	TRANSISTOR 2SC2458	
Q034	8-729-245-83	TRANSISTOR 2SC2458	
Q035	8-729-900-80	TRANSISTOR DTC114ES	
Q036	8-729-178-55	TRANSISTOR 2SC2785E	
Q037	8-729-117-56	TRANSISTOR 2SA1175-K	
Q038	8-729-384-46	TRANSISTOR 2SA844-D	
Q039	8-729-603-30	TRANSISTOR 2SC403SP	

The components identified by shading and mark ⚠ are critical for safety. Replace only with part number specified.

When indicating parts by reference number, please include the board name.

Ref.No	Part No.	Description	Remark
Q040	8-729-603-30	TRANSISTOR 2SC403SP	
Q041	8-729-384-46	TRANSISTOR 2SA844	
Q048	8-729-603-30	TRANSISTOR 2SC403SP	
Q049	8-729-603-30	TRANSISTOR 2SC403SP	
Q050	8-729-603-30	TRANSISTOR 2SC403SP	
Q051	8-729-384-46	TRANSISTOR 2SA844	
Q056	8-729-245-83	TRANSISTOR 2SC2458	
Q061	8-729-245-83	TRANSISTOR 2SC2458	
Q068	8-729-245-83	TRANSISTOR 2SC2458	
Q070	8-729-245-83	TRANSISTOR 2SC2458	
Q071	8-729-245-83	TRANSISTOR 2SC2458	
Q076	8-729-204-83	TRANSISTOR 2SA1048 (E MODEL)	
Q077	8-729-245-83	TRANSISTOR 2SC2458 (E MODEL)	
Q080	8-729-245-83	TRANSISTOR 2SC2458	
Q100	8-729-900-85	TRANSISTOR DTC144WS	
Q101	8-729-900-89	TRANSISTOR DTC144ES	
Q102	8-729-900-65	TRANSISTOR DTA144ES	
Q103	8-729-245-83	TRANSISTOR 2SC2458	
Q401	8-729-245-83	TRANSISTOR 2SC2458	
Q501	8-729-245-83	TRANSISTOR 2SC2458	
Q502	8-729-245-83	TRANSISTOR 2SC2458	
Q503	8-729-245-83	TRANSISTOR 2SC2458	
Q504	8-729-245-83	TRANSISTOR 2SC2458	
Q620	8-729-204-83	TRANSISTOR 2SA1048 (ES MODEL)	
Q701	8-729-245-83	TRANSISTOR 2SC2458	
Q702	8-729-900-89	TRANSISTOR DTC144ES	
Q703	8-729-204-83	TRANSISTOR 2SA1048	
Q704	8-729-900-89	TRANSISTOR DTC144ES	
Q707	8-729-900-89	TRANSISTOR DTC144ES	
Q709	8-729-900-36	TRANSISTOR DTC124ES	
Q715	8-729-245-83	TRANSISTOR 2SC2458	
Q716	8-729-245-83	TRANSISTOR 2SC2458	
Q717	8-729-245-83	TRANSISTOR 2SC2458	
Q720	8-729-900-89	TRANSISTOR DTC144ES	
Q721	8-729-900-89	TRANSISTOR DTC144ES	
Q806	8-729-245-83	TRANSISTOR 2SC2458 (ES MODEL)	
Q810	8-729-900-89	TRANSISTOR DTC144ES	
Q811	8-729-900-89	TRANSISTOR DTC144ES	
Q812	8-729-900-89	TRANSISTOR DTC144ES	
Q813	8-729-900-89	TRANSISTOR DTC144ES	
Q814	8-729-900-89	TRANSISTOR DTC144ES	
Q815	8-729-900-89	TRANSISTOR DTC144ES	
Q816	8-729-603-30	TRANSISTOR 2SC403SP	
Q817	8-729-603-30	TRANSISTOR 2SC403SP	
Q818	8-729-603-30	TRANSISTOR 2SC403SP	
Q819	8-729-603-30	TRANSISTOR 2SC403SP	
Q820	8-729-603-30	TRANSISTOR 2SC403SP	
Q821	8-729-117-56	TRANSISTOR 2SA1175-K	
Q822	8-729-178-55	TRANSISTOR 2SC2785E	
Q823	8-729-117-56	TRANSISTOR 2SA1175-K	
Q824	8-729-178-55	TRANSISTOR 2SC2785E	
Q825	8-729-603-30	TRANSISTOR 2SC403SP	
Q826	8-729-900-89	TRANSISTOR DTC144ES	
Q827	8-729-245-83	TRANSISTOR 2SC2458	
Q832	8-729-603-30	TRANSISTOR 2SC403SP	
Q833	8-729-603-30	TRANSISTOR 2SC403SP	
Q834	8-729-900-80	TRANSISTOR DTC114ES	
Q837	8-729-204-83	TRANSISTOR 2SA1048	
Q838	8-729-178-55	TRANSISTOR 2SC2785E	
Q839	8-729-178-55	TRANSISTOR 2SC2785E	
Q905	8-729-177-43	TRANSISTOR 2SD774-3	
Q906	8-729-204-83	TRANSISTOR 2SA1048	
Q910	8-729-900-36	TRANSISTOR DTC124ES	
Q921	8-729-204-83	TRANSISTOR 2SA1048	
Q922	8-729-900-36	TRANSISTOR DTC124ES	
Q923	8-729-245-83	TRANSISTOR 2SC2458	
Q925	8-729-245-83	TRANSISTOR 2SC2458	
Q926	8-729-900-89	TRANSISTOR DTC144ES	
Q928	8-729-245-83	TRANSISTOR 2SC2458	

RESISTOR

R032	1-247-831-00	CARBON	1K	5%	1/6W
R035	1-247-859-00	CARBON	15K	5%	1/6W
R038	1-247-837-00	CARBON	1.8K	5%	1/6W
R039 ⚠	1-212-857-51	FUSIBLE	10	5%	1/4W F
R046	1-249-419-11	CARBON	1.5K	5%	1/6W (ES MODEL)
R048	1-247-847-00	CARBON	4.7K	5%	1/6W (ES MODEL)
R050	1-247-853-00	CARBON	8.2K	5%	1/6W
R051	1-247-821-00	CARBON	390	5%	1/6W
R052	1-247-819-00	CARBON	330	5%	1/6W
R053	1-247-843-00	CARBON	3.3K	5%	1/6W
R054	1-247-847-00	CARBON	4.7K	5%	1/6W
R055	1-247-849-00	CARBON	5.6K	5%	1/6W (ES MODEL)
R056	1-247-867-00	CARBON	33K	5%	1/6W
R058	1-247-873-00	CARBON	56K	5%	1/6W
R059	1-247-863-00	CARBON	22K	5%	1/6W
R060	1-247-867-00	CARBON	33K	5%	1/6W
R061	1-249-429-11	CARBON	10K	5%	1/6W
R062	1-249-429-11	CARBON	10K	5%	1/6W
R063	1-247-841-00	CARBON	2.7K	5%	1/6W
R064	1-247-848-00	CARBON	5.1K	5%	1/6W
R065	1-247-889-00	CARBON	270K	5%	1/6W
R066	1-247-870-00	CARBON	43K	5%	1/6W
R067	1-247-862-00	CARBON	20K	5%	1/6W
R068	1-247-838-00	CARBON	2K	5%	1/6W
R069	1-247-831-00	CARBON	1K	5%	1/6W
R070	1-247-831-00	CARBON	1K	5%	1/6W
R071	1-249-429-11	CARBON	10K	5%	1/6W
R072	1-247-841-00	CARBON	2.7K	5%	1/6W
R073	1-247-831-00	CARBON	1K	5%	1/6W
R074	1-247-831-00	CARBON	1K	5%	1/6W
R075	1-247-815-00	CARBON	220	5%	1/6W
R076	1-249-429-11	CARBON	10K	5%	1/6W
R079	1-249-429-11	CARBON	10K	5%	1/6W (ES MODEL)
R080	1-247-853-00	CARBON	8.2K	5%	1/6W (ES MODEL)
R081	1-247-843-00	CARBON	3.3K	5%	1/6W

The components identified by shading and mark ⚠ are critical for safety. Replace only with part number specified.

When indicating parts by reference number, please include the board name.

YC-40

Ref.No	Part No.	Description				Remark
R082	1-249-437-11	CARBON	47K	5%	1/6W	
R083	1-247-825-00	CARBON	560	5%	1/6W	(ES MODEL)
R084	1-247-831-00	CARBON	1K	5%	1/6W	(ES MODEL)
R085	1-247-800-00	CARBON	51	5%	1/6W	(ES MODEL)
R086	1-247-825-00	CARBON	560	5%	1/6W	
R087	1-247-825-00	CARBON	560	5%	1/6W	
R088	1-247-807-00	CARBON	100	5%	1/6W	
R091	1-247-824-00	CARBON	510	5%	1/6W	(ES MODEL)
R092	1-247-785-00	CARBON	12	5%	1/6W	(ES MODEL)
R093	1-247-806-00	CARBON	91	5%	1/6W	(ES MODEL)
R094	1-249-437-11	CARBON	47K	5%	1/6W	
R096	1-247-879-00	CARBON	100K	5%	1/6W	(ES MODEL)
R097	1-247-881-00	CARBON	120K	5%	1/6W	(ES MODEL)
R098	1-247-891-00	CARBON	330K	5%	1/6W	
R100	1-247-873-00	CARBON	56K	5%	1/6W	(ES MODEL)
R101	1-247-867-00	CARBON	33K	5%	1/6W	(ES MODEL)
R103	1-247-831-00	CARBON	1K	5%	1/6W	
R104	1-249-421-11	CARBON	2.2K	5%	1/6W	
R105	1-247-829-00	CARBON	820	5%	1/6W	
R106	1-247-831-00	CARBON	1K	5%	1/6W	
R107	1-247-824-00	CARBON	510	5%	1/6W	
R108	1-249-421-11	CARBON	2.2K	5%	1/6W	
R109	1-247-867-00	CARBON	33K	5%	1/6W	
R111	1-247-851-00	CARBON	6.8K	5%	1/6W	
R112	1-247-851-00	CARBON	6.8K	5%	1/6W	
R113	1-247-843-00	CARBON	3.3K	5%	1/6W	
R114	1-247-828-00	CARBON	750	5%	1/6W	
R115	1-247-879-00	CARBON	100K	5%	1/6W	
R116	1-247-853-00	CARBON	8.2K	5%	1/6W	
R117	1-247-846-00	CARBON	4.3K	5%	1/6W	
R118	1-247-815-00	CARBON	220	5%	1/6W	
R119	1-247-847-00	CARBON	4.7K	5%	1/6W	
R120	1-247-831-00	CARBON	1K	5%	1/6W	
R121	1-247-831-00	CARBON	1K	5%	1/6W	
R122	1-249-421-11	CARBON	2.2K	5%	1/6W	
R125	1-247-831-00	CARBON	1K	5%	1/6W	
R126	1-247-831-00	CARBON	1K	5%	1/6W	
R127	1-249-419-11	CARBON	1.5K	5%	1/6W	
R128	1-247-831-00	CARBON	1K	5%	1/6W	
R129	1-247-867-00	CARBON	33K	5%	1/6W	
R130	1-247-843-00	CARBON	3.3K	5%	1/6W	
R131	1-247-841-00	CARBON	2.7K	5%	1/6W	
R132	1-247-887-00	CARBON	220K	5%	1/6W	
R133	1-247-807-00	CARBON	100	5%	1/6W	
R134	1-247-851-00	CARBON	6.8K	5%	1/6W	
R135	1-247-883-00	CARBON	150K	5%	1/6W	
R136	1-247-879-00	CARBON	100K	5%	1/6W	
R137	1-247-857-00	CARBON	12K	5%	1/6W	
R138	1-249-434-11	CARBON	27K	5%	1/6W	
R139	1-247-841-00	CARBON	2.7K	5%	1/6W	
R141	1-247-831-00	CARBON	1K	5%	1/6W	
R142	1-247-842-00	CARBON	3K	5%	1/6W	
R143	1-247-837-00	CARBON	1.8K	5%	1/6W	

Ref.No	Part No.	Description				Remark
R144	1-247-824-00	CARBON	510	5%	1/6W	
R146	1-247-830-00	CARBON	910	5%	1/6W	
R147	1-249-429-11	CARBON	10K	5%	1/6W	
R148	1-247-831-00	CARBON	1K	5%	1/6W	
R149	1-247-819-00	CARBON	330	5%	1/6W	
R150	1-247-863-00	CARBON	22K	5%	1/6W	
R151	1-247-812-00	CARBON	160	5%	1/6W	
R152	1-247-829-00	CARBON	820	5%	1/6W	
R153	1-247-863-00	CARBON	22K	5%	1/6W	
R154	1-247-821-00	CARBON	390	5%	1/6W	
R155	1-249-421-11	CARBON	2.2K	5%	1/6W	
R157	1-247-837-00	CARBON	1.8K	5%	1/6W	
R158	1-247-817-00	CARBON	270	5%	1/6W	
R159	1-247-813-00	CARBON	180	5%	1/6W	
R160	1-247-832-00	CARBON	1.1K	5%	1/6W	
R161	1-249-429-11	CARBON	10K	5%	1/6W	
R163	1-247-831-00	CARBON	1K	5%	1/6W	
R165	1-247-833-00	CARBON	1.2K	5%	1/6W	
R166	1-247-807-00	CARBON	100	5%	1/6W	
R171	1-247-901-00	CARBON	820K	5%	1/6W	
R172	1-247-838-00	CARBON	2K	5%	1/6W	
R173	1-247-861-00	CARBON	18K	5%	1/6W	
R174	1-249-421-11	CARBON	2.2K	5%	1/6W	
R175	1-247-831-00	CARBON	1K	5%	1/6W	
R176	1-249-421-11	CARBON	2.2K	5%	1/6W	
R178	1-249-421-11	CARBON	2.2K	5%	1/6W	
R179	1-247-843-00	CARBON	3.3K	5%	1/6W	
R181	1-249-419-11	CARBON	1.5K	5%	1/6W	
R182	1-247-819-00	CARBON	330	5%	1/6W	
R183	1-249-421-11	CARBON	2.2K	5%	1/6W	
R184	1-247-807-00	CARBON	100	5%	1/6W	
R185	1-247-843-00	CARBON	3.3K	5%	1/6W	
R189	1-247-825-00	CARBON	560	5%	1/6W	
R190	1-247-825-00	CARBON	560	5%	1/6W	
R192	1-247-831-00	CARBON	1K	5%	1/6W	
R193	1-249-429-11	CARBON	10K	5%	1/6W	
R194	1-247-819-00	CARBON	330	5%	1/6W	
R195	1-247-812-00	CARBON	160	5%	1/6W	
R196	1-247-863-00	CARBON	22K	5%	1/6W	
R197	1-247-863-00	CARBON	22K	5%	1/6W	
R198	1-247-829-00	CARBON	820	5%	1/6W	
R199	1-247-821-00	CARBON	390	5%	1/6W	
R200	1-249-421-11	CARBON	2.2K	5%	1/6W	
R201	1-247-837-00	CARBON	1.8K	5%	1/6W	
R203	1-247-813-00	CARBON	180	5%	1/6W	
R204	1-247-817-00	CARBON	270	5%	1/6W	
R205	1-247-807-00	CARBON	100	5%	1/6W	
R206	1-247-831-00	CARBON	1K	5%	1/6W	
R207	1-247-873-00	CARBON	56K	5%	1/6W	
R208	1-247-873-00	CARBON	56K	5%	1/6W	
R214	1-247-831-00	CARBON	1K	5%	1/6W	
R215	1-247-831-00	CARBON	1K	5%	1/6W	
R216	1-247-819-00	CARBON	330	5%	1/6W	

When indicating parts by reference number, please include the board name.

Ref.No	Part No.	Description				Remark
R217	1-249-421-11	CARBON	2.2K	5%	1/6W	
R218	1-247-857-00	CARBON	12K	5%	1/6W	
R219	1-247-873-00	CARBON	56K	5%	1/6W	
R220	1-249-434-11	CARBON	27K	5%	1/6W	
R221	1-247-849-00	CARBON	5.6K	5%	1/6W	
R222	1-247-837-00	CARBON	1.8K	5%	1/6W	
R223	1-247-837-00	CARBON	1.8K	5%	1/6W	
R231	1-247-867-00	CARBON	33K	5%	1/6W	
R236	1-247-853-00	CARBON	8.2K	5%	1/6W	
R238	1-247-851-00	CARBON	6.8K	5%	1/6W	
R239	1-249-429-11	CARBON	10K	5%	1/6W	
R240	1-249-421-11	CARBON	2.2K	5%	1/6W	
R248	1-247-819-00	CARBON	330	5%	1/6W	
R274	1-247-883-00	CARBON	150K	5%	1/6W	
R275	1-249-437-11	CARBON	47K	5%	1/6W	
R276	1-247-849-00	CARBON	5.6K	5%	1/6W	
R277	1-249-429-11	CARBON	10K	5%	1/6W	
R280	1-249-419-11	CARBON	1.5K	5%	1/6W	
R281	1-247-890-00	CARBON	300K	5%	1/6W	
R282	1-247-819-00	CARBON	330	5%	1/6W	
R283	1-249-421-11	CARBON	2.2K	5%	1/6W	
R284	1-247-877-00	CARBON	82K	5%	1/6W	
R286	1-247-843-00	CARBON	3.3K	5%	1/6W	
R291	1-247-863-00	CARBON	22K	5%	1/6W	
R292	1-247-875-00	CARBON	68K	5%	1/6W	
R293	1-247-819-00	CARBON	330	5%	1/6W	
R295	1-249-421-11	CARBON	2.2K	5%	1/6W	
R298	1-247-894-00	CARBON	430K	5%	1/6W	
R299	1-247-892-00	CARBON	360K	5%	1/6W	
R301	1-249-429-11	CARBON	10K	5%	1/6W	
R302	1-247-819-00	CARBON	330	5%	1/6W	
R303	1-247-819-00	CARBON	330	5%	1/6W	
R304	1-247-847-00	CARBON	4.7K	5%	1/6W	
R312	1-247-879-00	CARBON	100K	5%	1/6W	
R313	1-247-823-00	CARBON	470	5%	1/6W	
R320	1-247-878-00	CARBON	91K	5%	1/6W	
R321	1-247-887-00	CARBON	220K	5%	1/6W	
R325	1-247-807-00	CARBON	100	5%	1/6W	
R331	1-247-852-00	CARBON	7.5K	5%	1/6W	
R342	1-247-807-00	CARBON	100	5%	1/6W	
R346	1-247-847-00	CARBON	4.7K	5%	1/6W	
R347	1-247-879-00	CARBON	100K	5%	1/6W	(E MODEL)
R351	1-247-815-00	CARBON	220	5%	1/6W	
R353	1-249-421-11	CARBON	2.2K	5%	1/6W	
R357	1-247-829-00	CARBON	820	5%	1/6W	
R370	1-247-797-00	CARBON	39	5%	1/6W	
R380	1-247-851-00	CARBON	6.8K	5%	1/6W	
R381	1-249-429-11	CARBON	10K	5%	1/6W	
R382	1-247-831-00	CARBON	1K	5%	1/6W	
R390	1-247-887-00	CARBON	220K	5%	1/6W	(E MODEL)
R401	1-247-810-00	CARBON	130	5%	1/6W	
R402	1-247-806-00	CARBON	91	5%	1/6W	
R403	1-247-867-00	CARBON	33K	5%	1/6W	

Ref.No	Part No.	Description				Remark
R404	1-249-437-11	CARBON	47K	5%	1/6W	
R405	1-247-831-00	CARBON	1K	5%	1/6W	
R406	1-247-832-00	CARBON	1.1K	5%	1/6W	
R407	1-247-832-00	CARBON	1.1K	5%	1/6W	
R408	1-247-849-00	CARBON	5.6K	5%	1/6W	
R409	1-247-831-00	CARBON	1K	5%	1/6W	
R413	1-247-829-00	CARBON	820	5%	1/6W	
R414	1-247-847-00	CARBON	4.7K	5%	1/6W	
R415	1-247-831-00	CARBON	1K	5%	1/6W	
R416	1-247-846-00	CARBON	4.3K	5%	1/6W	
R510	1-247-824-00	CARBON	510	5%	1/6W	
R511	1-247-867-00	CARBON	33K	5%	1/6W	
R512	1-247-847-00	CARBON	4.7K	5%	1/6W	
R513	1-247-863-00	CARBON	22K	5%	1/6W	
R514	1-247-821-00	CARBON	390	5%	1/6W	
R515	1-249-421-11	CARBON	2.2K	5%	1/6W	
R516	1-247-821-00	CARBON	390	5%	1/6W	
R517	1-247-821-00	CARBON	390	5%	1/6W	
R518	1-247-821-00	CARBON	390	5%	1/6W	
R519	1-247-821-00	CARBON	390	5%	1/6W	
R520	1-249-421-11	CARBON	2.2K	5%	1/6W	
R521	1-247-821-00	CARBON	390	5%	1/6W	
R522	1-249-421-11	CARBON	2.2K	5%	1/6W	
R525	1-247-843-00	CARBON	3.3K	5%	1/6W	
R603	1-247-843-00	CARBON	3.3K	5%	1/6W	
R607	1-249-429-11	CARBON	10K	5%	1/6W	(ES MODEL)
R638	1-247-807-00	CARBON	100	5%	1/6W	(ES MODEL)
R639	1-247-831-00	CARBON	1K	5%	1/6W	(ES MODEL)
R640	1-247-815-00	CARBON	220	5%	1/6W	(ES MODEL)
R641	1-247-823-00	CARBON	470	5%	1/6W	(ES MODEL)
R643	1-247-875-00	CARBON	68K	5%	1/6W	
R650	1-249-437-11	CARBON	47K	5%	1/6W	
R651	1-247-867-00	CARBON	33K	5%	1/6W	
R652	1-247-831-00	CARBON	1K	5%	1/6W	
R654	1-247-831-00	CARBON	1K	5%	1/6W	
R655	1-247-831-00	CARBON	1K	5%	1/6W	
R656	1-247-825-00	CARBON	560	5%	1/6W	
R657	1-247-831-00	CARBON	1K	5%	1/6W	
R701	1-247-825-00	CARBON	560	5%	1/6W	
R702	1-249-421-11	CARBON	2.2K	5%	1/6W	
R703	1-247-867-00	CARBON	33K	5%	1/6W	
R704	1-247-813-00	CARBON	180	5%	1/6W	
R705	1-247-813-00	CARBON	180	5%	1/6W	
R710	1-249-429-11	CARBON	10K	5%	1/6W	
R712	1-249-419-11	CARBON	1.5K	5%	1/6W	
R714	1-247-811-00	CARBON	150	5%	1/6W	
R737	1-249-429-11	CARBON	10K	5%	1/6W	
R738	1-249-429-11	CARBON	10K	5%	1/6W	
R739	1-249-429-11	CARBON	10K	5%	1/6W	
R740	1-247-861-00	CARBON	18K	5%	1/6W	
R741	1-249-429-11	CARBON	10K	5%	1/6W	
R743	1-247-879-00	CARBON	100K	5%	1/6W	
R744	1-247-879-00	CARBON	100K	5%	1/6W	

When indicating parts by reference number, please include the board name.

YC-40

Ref.No	Part No.	Description				Remark
R745	1-247-840-00	CARBON	2.4K	5%	1/6W	
R746	1-247-815-00	CARBON	220	5%	1/6W	
R747	1-247-857-00	CARBON	12K	5%	1/6W	
R748	1-249-421-11	CARBON	2.2K	5%	1/6W	
R749	1-247-815-00	CARBON	220	5%	1/6W	
R750	1-247-807-00	CARBON	100	5%	1/6W	
R753	1-249-429-11	CARBON	10K	5%	1/6W	
R754	1-249-421-11	CARBON	2.2K	5%	1/6W	
R778	1-249-437-11	CARBON	47K	5%	1/6W	
R802	1-247-831-00	CARBON	1K	5%	1/6W	
R803	1-249-437-11	CARBON	47K	5%	1/6W	
R804	1-249-437-11	CARBON	47K	5%	1/6W	
R805	1-247-883-00	CARBON	150K	5%	1/6W	
R806	1-247-883-00	CARBON	150K	5%	1/6W	
R807	1-247-829-00	CARBON	820	5%	1/6W	
R809	1-247-891-00	CARBON	330K	5%	1/6W (ES MODEL)	
R811	1-247-843-00	CARBON	3.3K	5%	1/6W	
R814	1-247-903-00	CARBON	1M	5%	1/6W	
R815	1-247-831-00	CARBON	1K	5%	1/6W	
R816	1-247-899-00	CARBON	680K	5%	1/6W	
R817	1-215-450-00	METAL	16K	1%	1/6W	
R818	1-215-448-91	METAL	13K	1%	1/6W	
R821	1-249-421-11	CARBON	2.2K	5%	1/6W (ES MODEL)	
R822	1-249-421-11	CARBON	2.2K	5%	1/6W (ES MODEL)	
R823	1-247-867-00	CARBON	33K	5%	1/6W	
R824	1-247-863-00	CARBON	22K	5%	1/6W	
R825	1-247-831-00	CARBON	1K	5%	1/6W	
R830	1-247-831-00	CARBON	1K	5%	1/6W	
R831	1-247-831-00	CARBON	1K	5%	1/6W	
R832	1-247-831-00	CARBON	1K	5%	1/6W	
R833	1-247-877-00	CARBON	82K	5%	1/6W	
R834	1-249-419-11	CARBON	1.5K	5%	1/6W	
R835	1-247-831-00	CARBON	1K	5%	1/6W	
R836	1-247-819-00	CARBON	330	5%	1/6W	
R837	1-247-819-00	CARBON	330	5%	1/6W	
R838	1-247-863-00	CARBON	22K	5%	1/6W	
R839	1-247-847-00	CARBON	4.7K	5%	1/6W	
R840	1-247-831-00	CARBON	1K	5%	1/6W	
R841	1-247-827-00	CARBON	680	5%	1/6W	
R843	1-247-825-00	CARBON	560	5%	1/6W	
R844	1-247-877-00	CARBON	82K	5%	1/6W	
R845	1-249-437-11	CARBON	47K	5%	1/6W	
R846	1-247-867-00	CARBON	33K	5%	1/6W	
R848	1-247-811-00	CARBON	150	5%	1/6W	
R849	1-247-803-00	CARBON	68	5%	1/6W	
R853	1-247-803-00	CARBON	68	5%	1/6W	
R854	1-247-804-00	CARBON	75	5%	1/6W	
R855	1-247-831-00	CARBON	1K	5%	1/6W	
R856	1-247-831-00	CARBON	1K	5%	1/6W	
R867	1-247-853-00	CARBON	8.2K	5%	1/6W	
R870	1-247-818-00	CARBON	300	5%	1/6W	
R871	1-247-818-00	CARBON	300	5%	1/6W	
R872	1-247-825-00	CARBON	560	5%	1/6W	

Ref.No	Part No.	Description				Remark
R876	1-247-849-00	CARBON	5.6K	5%	1/6W	
R877	1-215-445-00	METAL	10K	1%	1/6W	
R878	1-215-433-00	METAL	3.3K	1%	1/6W	
R880	1-249-429-11	CARBON	10K	5%	1/6W	
R881	1-247-831-00	CARBON	1K	5%	1/6W	
R882	1-247-879-00	CARBON	100K	5%	1/6W	
R883 ⚠	1-247-807-91	CARBON	100	5%	1/6W	
R884	1-247-847-00	CARBON	4.7K	5%	1/6W	
R885	1-247-817-00	CARBON	270	5%	1/6W	
R886	1-247-833-00	CARBON	1.2K	5%	1/6W	
R888	1-247-863-00	CARBON	22K	5%	1/6W	
R892 ⚠	1-247-831-91	CARBON	1K	5%	1/6W	
R893	1-247-847-00	CARBON	4.7K	5%	1/6W	
R894	1-247-823-00	CARBON	470	5%	1/6W	
R895	1-247-823-00	CARBON	470	5%	1/6W	
R896	1-249-429-11	CARBON	10K	5%	1/6W	
R897	1-249-429-11	CARBON	10K	5%	1/6W	
R898	1-247-887-00	CARBON	220K	5%	1/6W	
R899	1-247-887-00	CARBON	220K	5%	1/6W	
R918	1-247-831-00	CARBON	1K	5%	1/6W	
R919 ⚠	1-212-857-51	FUSIBLE	10	5%	1/4W	F
R920	1-249-419-11	CARBON	1.5K	5%	1/6W	
R921	1-247-857-00	CARBON	12K	5%	1/6W	
R922	1-247-859-00	CARBON	15K	5%	1/6W	
R926	1-247-863-00	CARBON	22K	5%	1/6W	
R935	1-247-843-00	CARBON	3.3K	5%	1/6W	
R950	1-247-830-00	CARBON	910	5%	1/6W	
R963	1-249-429-11	CARBON	10K	5%	1/6W	
R964	1-247-858-00	CARBON	13K	5%	1/6W	
R965	1-247-857-00	CARBON	12K	5%	1/6W	
R966	1-247-866-00	CARBON	30K	5%	1/6W	
R967	1-247-875-00	CARBON	68K	5%	1/6W	
R968	1-247-853-00	CARBON	8.2K	5%	1/6W	
R969	1-247-841-00	CARBON	2.7K	5%	1/6W	
R970	1-247-863-00	CARBON	22K	5%	1/6W	
R971	1-249-429-11	CARBON	10K	5%	1/6W	
R972	1-249-429-11	CARBON	10K	5%	1/6W	
R974	1-249-419-11	CARBON	1.5K	5%	1/6W	
R975	1-247-811-00	CARBON	150	5%	1/6W	
R976	1-247-809-00	CARBON	120	5%	1/6W	
R977	1-247-831-00	CARBON	1K	5%	1/6W	
R979	1-247-825-00	CARBON	560	5%	1/6W	
R980	1-247-867-00	CARBON	33K	5%	1/6W	
R981	1-247-853-00	CARBON	8.2K	5%	1/6W	
R982	1-247-853-00	CARBON	8.2K	5%	1/6W	
R983	1-247-792-00	CARBON	0	5%	1/6W	
R986	1-249-421-11	CARBON	2.2K	5%	1/6W	
R988	1-247-825-00	CARBON	560	5%	1/6W	
R989	1-247-853-00	CARBON	8.2K	5%	1/6W	
R990	1-247-867-00	CARBON	33K	5%	1/6W	
R991	1-247-853-00	CARBON	8.2K	5%	1/6W	
R992	1-247-792-00	CARBON	0	5%	1/6W	
R995	1-247-803-00	CARBON	68	5%	1/6W	

The components identified by shading and mark ⚠ are critical for safety. Replace only with part number specified.

When indicating parts by reference number, please include the board name.

Ref.No	Part No.	Description	Remark
		VARIABLE RESISTOR	
RV001	1-228-989-00	RES, ADJ, METAL GLAZE 470 (ES MODEL)	
RV002	1-228-994-00	RES, ADJ, CARBON 10K	
RV003	1-228-996-00	RES, ADJ, CARBON 47K	
RV004	1-228-989-00	RES, ADJ, METAL GLAZE 470	
RV005	1-228-996-00	RES, ADJ, CARBON 47K	
RV006	1-228-995-00	RES, ADJ, CARBON 22K	
RV007	1-228-994-00	RES, ADJ, CARBON 10K	
RV008	1-228-991-00	RES, ADJ, CARBON 2.2K	
RV009	1-228-996-00	RES, ADJ, CARBON 47K	
RV010	1-228-995-00	RES, ADJ, CARBON 22K	
RV013	1-228-996-00	RES, ADJ, CARBON 47K	
RV014	1-228-994-00	RES, ADJ, CARBON 10K	
RV015	1-228-989-00	RES, ADJ, METAL GLAZE 470	
RV016	1-228-990-00	RES, ADJ, CARBON 1K	
RV019	1-228-993-00	RES, ADJ, METAL GLAZE 4.7K	
RV020	1-228-990-00	RES, ADJ, CARBON 1K	
RV021	1-228-996-00	RES, ADJ, CARBON 47K	
RV022	1-228-993-00	RES, ADJ, METAL GLAZE 4.7K	
RV401	1-228-994-00	RES, ADJ, METAL GLAZE 10K	
RV501	1-228-989-00	RES, ADJ, CARBON 470	
RV702	1-228-995-00	RES, ADJ, CARBON 22K	
		SWITCH	
SW901	1-570-283-11	SWITCH, SLIDE	
		TRANSFORMER	
T001	1-426-093-00	COIL, REC C BPT	
T002	1-409-353-00	COIL, TRAP	
		CRYSTAL	
X001	1-527-345-00	CRYSTAL, OSC (3.58MHz)	

****

*A-6711-659-A RP-31 BOARD, COMPLETE
****

CAPACITOR

C703	1-161-013-00	CERAMIC	0.01MF	10%	25V
C704	1-123-647-00	ELECT	47MF	20%	6.3V
C705	1-123-610-00	ELECT	0.47MF	20%	50V
C706	1-130-483-00	MYLAR	0.01MF	5%	50V
C707	1-123-620-00	ELECT	10MF	20%	25V
C708	1-161-013-00	CERAMIC	0.01MF	10%	25V
C712	1-161-013-00	CERAMIC	0.01MF	10%	25V
C717	1-102-529-00	CERAMIC	100PF	5%	50V
C718	1-102-973-00	CERAMIC	100PF	5%	50V
C719	1-102-824-21	CERAMIC	470PF	5%	50V
C720	1-102-120-00	CERAMIC	0.0018MF	10%	50V
C721	1-102-510-00	CERAMIC	12PF	5%	50V
C722	1-102-518-00	CERAMIC	33PF	5%	50V
C723	1-123-822-00	ELECT	47MF	20%	10V
C724	1-123-620-00	ELECT	10MF	20%	25V
C725	1-130-483-00	MYLAR	0.01MF	5%	50V
C726	1-123-610-00	ELECT	0.47MF	20%	50V
C727	1-123-617-00	ELECT	10MF	20%	16V
C733	1-161-013-00	CERAMIC	0.01MF	10%	25V
C734	1-161-013-00	CERAMIC	0.01MF	10%	25V
C751	1-161-013-00	CERAMIC	0.01MF	10%	25V
C754	1-161-013-00	CERAMIC	0.01MF	10%	25V
C755	1-161-013-00	CERAMIC	0.01MF	10%	25V
C760	1-130-013-00	CERAMIC	0.01MF	10%	25V
C761	1-130-013-00	CERAMIC	0.01MF	10%	25V
C762	1-123-611-00	ELECT	1MF	20%	50V
C763	1-123-611-00	ELECT	1MF	20%	50V
C764	1-123-620-00	ELECT	10MF	20%	25V
C765	1-161-013-00	CERAMIC	0.01MF	10%	25V
C766	1-102-518-00	CERAMIC	33PF	5%	50V
C767	1-161-013-00	CERAMIC	0.01MF	10%	25V
C768	1-161-013-00	CERAMIC	0.01MF	10%	25V
C769	1-161-013-00	CERAMIC	0.01MF	10%	25V
C770	1-161-013-00	CERAMIC	0.01MF	10%	25V
C771	1-123-620-00	ELECT	10MF	20%	25V
C773	1-123-617-00	ELECT	10MF	20%	16V
C774	1-102-851-00	CERAMIC	15PF	5%	50V
C775	1-102-851-00	CERAMIC	15PF	5%	50V
C780	1-161-013-00	CERAMIC	0.01MF	10%	25V
C781	1-123-620-00	ELECT	10MF	20%	25V
C782	1-161-013-00	CERAMIC	0.01MF	10%	25V
C784	1-161-013-00	CERAMIC	0.01MF	10%	25V
C791	1-161-013-00	CERAMIC	0.01MF	10%	25V
C792	1-123-620-00	ELECT	10MF	20%	25V
C801	1-123-822-00	ELECT	47MF	20%	10V
C802	1-123-611-00	ELECT	1MF	20%	50V
C803	1-161-013-00	CERAMIC	0.01MF	10%	25V
C805	1-161-013-00	CERAMIC	0.01MF	10%	25V
C806	1-161-013-00	CERAMIC	0.01MF	10%	25V
C807	1-102-851-00	CERAMIC	15PF	5%	50V
C808	1-102-978-00	CERAMIC	220PF	5%	50V
C810	1-161-013-00	CERAMIC	0.01MF	10%	25V
C811	1-161-013-00	CERAMIC	0.01MF	10%	25V
C812	1-161-013-00	CERAMIC	0.01MF	10%	25V
C813	1-161-013-00	CERAMIC	0.01MF	10%	25V
C821	1-123-617-00	ELECT	10MF	20%	16V
C831	1-123-822-00	ELECT	47MF	20%	10V
C832	1-102-513-00	CERAMIC	18PF	5%	50V
C833	1-102-513-00	CERAMIC	18PF	5%	50V
C841	1-161-059-00	CERAMIC	0.047MF	10%	25V

CONNECTOR

CN701	*1-560-900-00	PIN, CONNECTOR 12P
CN702	*1-560-894-00	PIN, CONNECTOR 6P
CN703	*1-564-030-00	PIN, CONNECTOR 5P
CN704	*1-560-900-00	PIN, CONNECTOR 12P

When indicating parts by reference number, please include the board name.

RP-31 DH-4

Ref.No	Part No.	Description	Remark
		DIODE	
D701	8-719-911-19	DIODE 1SS119	
D702	8-719-911-19	DIODE 1SS119	
		IC	
IC701	8-752-004-50	IC CX20045	
IC703	8-759-103-17	IC UPC1521HA	
IC704	8-752-006-10	IC CX20061	
IC705	8-759-200-60	IC TA7060AP	
		COIL	
L701	1-408-877-00	MICRO INDUCTOR 0.22UH	
L702	1-408-621-00	MICRO INDUCTOR 330UH	
L703	1-408-623-00	MICRO INDUCTOR 470UH	
L706	1-408-421-00	MICRO INDUCTOR 100UH	
L709	1-408-616-21	MICRO INDUCTOR 120UH	
L711	1-408-605-00	MICRO INDUCTOR 15UH	
L712	1-408-877-00	MICRO INDUCTOR 0.22UH	
L714	1-408-621-00	MICRO INDUCTOR 330UH	
L716	1-408-623-00	MICRO INDUCTOR 470UH	
L720	1-408-604-00	MICRO INDUCTOR 12UH	
L721	1-408-623-00	MICRO INDUCTOR 470UH	
L761	1-408-623-00	MICRO INDUCTOR 470UH	
L762	1-408-623-00	MICRO INDUCTOR 470UH	
L763	1-408-605-00	MICRO INDUCTOR 15UH	
L764	1-408-623-00	MICRO INDUCTOR 470UH	
L771	1-408-623-00	MICRO INDUCTOR 470UH	
L772	1-408-599-11	MICRO INDUCTOR 4.7UH	
L773	1-408-599-11	MICRO INDUCTOR 4.7UH	
L774	1-408-623-00	MICRO INDUCTOR 470UH	
L775	1-410-162-11	MICRO INDUCTOR 470UH	
L801	1-408-607-21	MICRO INDUCTOR 22UH	
L802	1-408-606-00	MICRO INDUCTOR 18UH	
		TRANSISTOR	
Q703	8-729-245-83	TRANSISTOR 2SC2458	
Q704	8-729-245-83	TRANSISTOR 2SC2458	
Q705	8-729-245-83	TRANSISTOR 2SC2458	
Q706	8-729-245-83	TRANSISTOR 2SC2458	
Q707	8-729-900-89	TRANSISTOR DTC144ES	
Q761	8-729-245-83	TRANSISTOR 2SC2458	
		RESISTOR	
R534	1-247-833-00	CARBON 1.2K 5% 1/6W	
R701	1-247-831-00	CARBON 1K 5% 1/6W	
R704	1-247-857-00	CARBON 12K 5% 1/6W	
R709	1-247-839-00	CARBON 2.2K 5% 1/6W	
R712	1-247-831-00	CARBON 1K 5% 1/6W	
R713	1-247-831-00	CARBON 1K 5% 1/6W	
R717	1-247-833-00	CARBON 1.2K 5% 1/6W	
R720	1-247-833-00	CARBON 1.2K 5% 1/6W	
R722	1-247-829-00	CARBON 820 5% 1/6W	

Ref.No	Part No.	Description	Remark
R745	1-247-807-00	CARBON 100 5% 1/6W	
R748	1-249-419-11	CARBON 1.5K 5% 1/6W	
R749	1-249-419-11	CARBON 1.5K 5% 1/6W	
R752	1-249-429-11	CARBON 10K 5% 1/6W	
R753	1-249-421-11	CARBON 2.2K 5% 1/6W	
R754	1-247-815-00	CARBON 220 5% 1/6W	
R755	1-247-849-00	CARBON 5.6K 5% 1/6W	
R756	1-247-870-00	CARBON 43K 5% 1/6W	
R757	1-249-429-11	CARBON 10K 5% 1/6W	
R761	1-247-849-00	CARBON 5.6K 5% 1/6W	
R762	1-247-870-00	CARBON 43K 5% 1/6W	
R763	1-249-419-11	CARBON 1.5K 5% 1/6W	
R764	1-247-833-00	CARBON 1.2K 5% 1/6W	
R765	1-247-831-00	CARBON 1K 5% 1/6W	
R771	1-247-821-00	CARBON 390 5% 1/6W	
R772	1-247-821-00	CARBON 390 5% 1/6W	
R801	1-247-797-00	CARBON 39 5% 1/6W	
R802	1-247-831-00	CARBON 1K 5% 1/6W	
R806	1-247-845-00	CARBON 3.9K 5% 1/6W	
R809	1-247-863-00	CARBON 22K 5% 1/6W	
R810	1-247-863-00	CARBON 22K 5% 1/6W	
R811	1-247-827-00	CARBON 680 5% 1/6W	
R812	1-247-829-00	CARBON 820 5% 1/6W	
R814	1-249-421-11	CARBON 2.2K 5% 1/6W	
R815	1-249-421-11	CARBON 2.2K 5% 1/6W	
R816	1-247-831-00	CARBON 1K 5% 1/6W	
R817	1-247-831-00	CARBON 1K 5% 1/6W	
R841	1-247-797-00	CARBON 39 5% 1/6W	
		VARIABLE RESISTOR	
RV701	1-228-920-00	RES, ADJ, CARBON 2.2K	
RV702	1-228-920-00	RES, ADJ, CARBON 2.2K	
RV704	1-228-920-00	RES, ADJ, CARBON 2.2K	
RV705	1-228-919-00	RES, ADJ, CARBON 1K	
RV706	1-228-919-00	RES, ADJ, CARBON 1K	
		TRANSFORMER	
T701	1-448-300-11	TRANSFORMER, STEP UP	

****

*A-6711-660-A DH-4 BOARD, COMPLETE
****

		CAPACITOR			
C320	1-161-013-00	CERAMIC	0.01MF	10%	25V
C321	1-123-620-00	ELECT	10MF	20%	25V
C322	1-161-059-00	CERAMIC	0.047MF	10%	25V
C323	1-123-620-00	ELECT	10MF	20%	25V
C324	1-123-611-00	ELECT	1MF	20%	50V
C325	1-123-619-00	ELECT	4.7MF	20%	50V
C326	1-161-059-00	CERAMIC	0.047MF	10%	25V
C327	1-161-059-00	CERAMIC	0.047MF	10%	25V
C328	1-123-611-00	ELECT	1MF	20%	50V

When indicating parts by reference number, please include the board name.

Ref.No	Part No.	Description			Remark
C329	1-161-013-00	CERAMIC	0.01MF	10%	25V
C330	1-123-620-00	ELECT	10MF	20%	25V
C331	1-123-622-00	ELECT	22MF	20%	16V
C332	1-161-059-00	CERAMIC	0.047MF	10%	25V
C333	1-161-059-00	CERAMIC	0.047MF	10%	25V
C334	1-102-978-00	CERAMIC	220PF	5%	50V
C360	1-123-620-00	ELECT	10MF	20%	25V
C372	1-123-620-00	ELECT	10MF	20%	25V
C373	1-161-013-00	CERAMIC	0.01MF	10%	25V
C501	1-161-025-00	CERAMIC	0.1MF	10%	25V
C502	1-161-013-00	CERAMIC	0.01MF	10%	25V
C503	1-102-516-00	CERAMIC	27PF	5%	50V
C505	1-161-025-00	CERAMIC	0.1MF	10%	25V
C506	1-161-025-00	CERAMIC	0.1MF	10%	25V
C507	1-161-025-00	CERAMIC	0.1MF	10%	25V
C508	1-161-013-00	CERAMIC	0.01MF	10%	25V
C509	1-123-620-00	ELECT	10MF	20%	25V
C510	1-123-620-00	ELECT	10MF	20%	25V
C511	1-161-013-00	CERAMIC	0.01MF	10%	25V
C513	1-161-025-00	CERAMIC	0.1MF	10%	25V
C514	1-161-013-00	CERAMIC	0.01MF	10%	25V
C515	1-123-620-00	ELECT	10MF	20%	25V
C520	1-161-013-00	CERAMIC	0.01MF	10%	25V
C521	1-102-959-00	CERAMIC	22PF	5%	50V
C522	1-161-013-00	CERAMIC	0.01MF	10%	25V
C601	1-123-822-00	ELECT	47MF	20%	10V
C602	1-123-822-00	ELECT	47MF	20%	10V
C603	1-123-619 00	ELECT	4.7MF	20%	50V
C604	1-123-619-00	ELECT	4.7MF	20%	50V
C605	1-123-611-00	ELECT	1MF	20%	50V
C606	1-123-611-00	ELECT	1MF	20%	50V
C607	1-123-620-00	ELECT	10MF	20%	25V
C608	1-123-333-00	ELECT	100MF	20%	16V
C609	1-102-973-00	CERAMIC	100PF	5%	50V
C610	1-102-973-00	CERAMIC	100PF	5%	50V
C611	1-123-620-00	ELECT	10MF	20%	25V
C729	1-102-519-00	CERAMIC	36PF	5%	50V
C746	1-161-013-00	CERAMIC	0.01MF	10%	25V
C747	1-161-059-00	CERAMIC	0.047MF	10%	25V
C748	1-161-013-00	CERAMIC	0.01MF	10%	25V
C801	1-123-621-00	ELECT	10MF	20%	25V
C802	1-123-620-00	ELECT	10MF	20%	25V
C803	1-161-013-00	CERAMIC	0.01MF	10%	25V
C804	1-123-821-00	ELECT	47MF	20%	16V
C805	1-102-961-00	CERAMIC	27PF	5%	50V
C806	1-123-619-00	ELECT	4.7MF	20%	50V
C811	1-102-508-00	CERAMIC	10PF	0.5PF	50V

CONNECTOR

CN501	*1-564-035-31	PIN, CONNECTOR 10P
CN504	*1-564-031-00	PIN, CONNECTOR 6P
CN505	*1-560-895-00	PIN, CONNECTOR 7P
CN506	*1-560-891-00	PIN, CONNECTOR 3P
CN507	*1-560-890-00	PIN, CONNECTOR 2P

Ref.No	Part No.	Description	Remark
CN508	*1-564-031-00	PIN, CONNECTOR 6P	
CN509	*1-564-028-00	PIN, CONNECTOR 3P	
CN510	*1-560-891-00	PIN, CONNECTOR 3P	

DIODE

D310	8-719-911-19	DIODE 1SS119	
D312	8-719-911-19	DIODE 1SS119	
D313	8-719-911-19	DIODE 1SS119	
D501	8-719-911-19	DIODE 1SS119	
D601	8-719-911-19	DIODE 1SS119	
D602	8-719-901-33	DIODE 1SS133	
D603	8-719-901-33	DIODE 1SS133	

IC

IC501	8-759-145-58	IC UPC4558C	
IC601	8-759-745-56	IC NJM4556D	

COIL

L301	1-407-510-00	MICRO INDUCTOR 33MMH	
L302	1-408-429-00	MICRO INDUCTOR 470UH	
L303	1-408-429-00	MICRO INDUCTOR 470UH	
L503	1-408-415-00	MICRO INDUCTOR 33UH	
L504	1-408-420-00	MICRO INDUCTOR 82UH	
L510	1-408-411-00	MICRO INDUCTOR 15UH	
L715	1-408-408-00	MICRO INDUCTOR 8.2UH	
L765	1-408-429-00	MICRO INDUCTOR 470UH	

TRANSISTOR

Q301	8-729-603-30	TRANSISTOR 2SC403SP	
Q302	8-729-245-83	TRANSISTOR 2SC2458	
Q303	8-729-245-83	TRANSISTOR 2SC2458	
Q304	8-729-245-83	TRANSISTOR 2SC2458	
Q305	8-729-245-83	TRANSISTOR 2SC2458	
Q306	8-729-245-83	TRANSISTOR 2SC2458	
Q307	8-729-204-83	TRANSISTOR 2SA1048	
Q308	8-729-204-83	TRANSISTOR 2SA1048	
Q309	8-729-245-83	TRANSISTOR 2SC2458	
Q310	8-729-245-83	TRANSISTOR 2SC2458	
Q311	8-729-900-89	TRANSISTOR DTC144ES	
Q312	8-729-900-89	TRANSISTOR DTC144ES	
Q502	8-729-603-30	TRANSISTOR 2SC403SP	
Q503	8-729-603-30	TRANSISTOR 2SC403SP	
Q504	8-729-245-83	TRANSISTOR 2SC2458	
Q505	8-729-245-83	TRANSISTOR 2SC2458	
Q506	8-729-204-83	TRANSISTOR 2SA1048	
Q507	8-729-204-83	TRANSISTOR 2SA1048	
Q508	8-729-245-83	TRANSISTOR 2SC2458	
Q509	8-729-245-83	TRANSISTOR 2SC2458	
Q510	8-729-245-83	TRANSISTOR 2SC2458	
Q511	8-729-245-83	TRANSISTOR 2SC2458	
Q512	8-729-178-54	TRANSISTOR 2SC2785	
Q513	8-729-900-36	TRANSISTOR DTC124ES	
Q601	8-729-245-83	TRANSISTOR 2SC2458	
Q602	8-729-245-83	TRANSISTOR 2SC2458	
Q706	8-729-245-83	TRANSISTOR 2SC2458	

When indicating parts by reference number, please include the board name.

DH-4

Ref.No	Part No.	Description				Remark
Q801	8-729-245-83	TRANSISTOR 2SC2458				
Q802	8-729-245-83	TRANSISTOR 2SC2458				
		RESISTOR				
R330	1-247-841-00	CARBON	2.7K	5%	1/6W	
R331	1-247-861-00	CARBON	18K	5%	1/6W	
R332	1-247-867-00	CARBON	33K	5%	1/6W	
R333	1-249-429-11	CARBON	10K	5%	1/6W	
R334	1-247-841-00	CARBON	2.7K	5%	1/6W	
R335	1-249-437-11	CARBON	47K	5%	1/6W	
R336	1-249-434-11	CARBON	27K	5%	1/6W	
R337	1-247-831-00	CARBON	1K	5%	1/6W	
R338	1-247-829-00	CARBON	820	5%	1/6W	
R339	1-247-831-00	CARBON	1K	5%	1/6W	
R340	1-215-413-00	METAL	470	1%	1/6W	
R341	1-215-433-00	METAL	3.3K	1%	1/6W	
R342	1-215-405-00	METAL	220	1%	1/6W	
R343	1-215-433-00	METAL	3.3K	1%	1/6W	
R344	1-215-451-00	METAL	18K	1%	1/6W	
R345	1-249-429-11	CARBON	10K	5%	1/6W	
R346	1-249-429-11	CARBON	10K	5%	1/6W	
R347	1-247-831-00	CARBON	1K	5%	1/6W	
R348	1-247-815-00	CARBON	220	5%	1/6W	
R349	1-249-429-11	CARBON	10K	5%	1/6W	
R350	1-249-429-11	CARBON	10K	5%	1/6W	
R351	1-249-437-11	CARBON	47K	5%	1/6W	
R354	1-247-879-00	CARBON	100K	5%	1/6W	
R355	1-247-827-00	CARBON	680K	5%	1/6W	
R356	1-247-843-00	CARBON	3.3K	5%	1/6W	
R357	1-247-857-00	CARBON	12K	5%	1/6W	
R358	1-247-831-00	CARBON	1K	5%	1/6W	
R361	1-247-807-00	CARBON	100	5%	1/6W	
R364	1-247-811-00	CARBON	150	5%	1/6W	
R365	1-249-429-11	CARBON	10K	5%	1/6W	
R366	1-249-429-11	CARBON	10K	5%	1/6W	
R367	1-249-421-11	CARBON	2.2K	5%	1/6W	
R368	1-247-831-00	CARBON	1K	5%	1/6W	
R501	1-249-434-11	CARBON	27K	5%	1/6W	
R502	1-247-859-00	CARBON	15K	5%	1/6W	
R503	1-247-831-00	CARBON	1K	5%	1/6W	
R505	1-247-823-00	CARBON	470	5%	1/6W	
R507	1-247-831-00	CARBON	1K	5%	1/6W	
R509	1-247-809-00	CARBON	120	5%	1/6W	
R510	1-247-831-00	CARBON	1K	5%	1/6W	
R511	1-247-809-00	CARBON	120	5%	1/6W	
R513	1-247-819-00	CARBON	330	5%	1/6W	
R514	1-247-831-00	CARBON	1K	5%	1/6W	
R515	1-247-819-00	CARBON	330	5%	1/6W	
R516	1-247-807-00	CARBON	100	5%	1/6W	
R519	1-247-799-00	CARBON	47	5%	1/6W	
R520	1-247-831-00	CARBON	1K	5%	1/6W	
R521	1-247-799-00	CARBON	47	5%	1/6W	
R522	1-247-863-00	CARBON	22K	5%	1/6W	

Ref.No	Part No.	Description				Remark
R523	1-215-445-00	METAL	10K	1%	1/6W	
R524	1-215-445-00	METAL	10K	1%	1/6W	
R525	1-215-445-00	METAL	10K	1%	1/6W	
R526	1-247-831-00	CARBON	1K	5%	1/6W	
R527	1-215-445-00	METAL	10K	1%	1/6W	
R528	1-247-889-00	CARBON	270K	5%	1/6W	
R529	1-215-469-00	METAL	100K	1%	1/6W	
R530	1-247-815-00	CARBON	220	5%	1/6W	
R531	1-247-815-00	CARBON	220	5%	1/6W	
R532	1-249-429-11	CARBON	10K	5%	1/6W	
R533	1-249-429-11	CARBON	10K	5%	1/6W	
R535	1-249-434-11	CARBON	27K	5%	1/6W	
R536	1-247-843-00	CARBON	3.3K	5%	1/6W	
R537	1-247-863-00	CARBON	22K	5%	1/6W	
R538	1-247-863-00	CARBON	22K	5%	1/6W	
R539	1-247-863-00	CARBON	22K	5%	1/6W	
R561	1-247-831-00	CARBON	1K	5%	1/6W	
R562	1-247-819-00	CARBON	330	5%	1/6W	
R563	1-249-421-11	CARBON	2.2K	5%	1/6W	
R564	1-215-429-00	METAL	2.2K	1%	1/6W	
R601	1-247-799-00	CARBON	47	5%	1/6W	
R602	1-249-429-11	CARBON	10K	5%	1/6W	
R603	1-247-799-00	CARBON	47	5%	1/6W	
R604	1-247-867-00	CARBON	33K	5%	1/6W	
R605	1-247-867-00	CARBON	33K	5%	1/6W	
R606	1-247-877-00	CARBON	82K	5%	1/6W	
R607	1-247-887-00	CARBON	220K	5%	1/6W	
R608	1-247-877-00	CARBON	82K	5%	1/6W	
R609	1-249-429-11	CARBON	10K	5%	1/6W	
R611	1-247-887-00	CARBON	220K	5%	1/6W	
R612	1-247-887-00	CARBON	220K	5%	1/6W	
R613	1-249-429-11	CARBON	10K	5%	1/6W	
R614	1-247-863-00	CARBON	22K	5%	1/6W	
R680	1-247-887-00	CARBON	220K	5%	1/6W	
R724	1-247-824-00	CARBON	510	5%	1/6W	
R725	1-247-824-00	CARBON	510	5%	1/6W	
R728	1-247-825-00	CARBON	560	5%	1/6W	
R750	1-247-831-00	CARBON	1K	5%	1/6W	
R752	1-247-858-00	CARBON	13K	5%	1/6W	
R753	1-247-831-00	CARBON	1K	5%	1/6W	
R754	1-247-829-00	CARBON	820	5%	1/6W	
R801	1-249-421-11	CARBON	2.2K	5%	1/6W	
R802	1-247-815-00	CARBON	220	5%	1/6W	
R803	1-247-847-00	CARBON	4.7K	5%	1/6W	
R804	1-247-887-00	CARBON	220K	5%	1/6W	
R805	1-247-879-00	CARBON	100K	5%	1/6W	
R806	1-247-831-00	CARBON	1K	5%	1/6W	
R807	1-247-823-00	CARBON	470	5%	1/6W	
R808	1-249-421-11	CARBON	2.2K	5%	1/6W	
R809	1-247-823-00	CARBON	470	5%	1/6W	
		VARIABLE RESISTOR				
RV301	1-228-990-00	RES, ADJ, CARBON 1K				
RV302	1-228-991-00	RES, ADJ, CARBON 2.2K				
RV501	1-228-991-00	RES, ADJ, METAL GLAZE 2.2K				

When indicating parts by reference number, please include the board name.

Ref.No	Part No.	Description			Remark
		AF-14 BOARD			
		**********			
	*A-6713-237-A	B-697 BOARD, COMPLETE			
		**********			
	*3-684-072-01	LID, BOTTOM, AF SHIELD CASE(S)			
	*3-684-087-01	CASE (S) (MAIN), SHIELD, AF			
	3-697-657-01	LID, BOTTOM, AF SHIELD CASE			
		BAND PASS FILTER			
BPF001	1-235-367-11	B.P.F			
BPF002	1-235-367-11	B.P.F			
BPF003	1-235-366-11	B.P.F			
BPF004	1-235-366-11	B.P.F			
		CAPACITOR			
C001	1-123-318-00	ELECT	33MF	20%	16V
C002	1-161-025-00	CERAMIC	0.1MF	10%	25V
C003	1-161-025-00	CERAMIC	0.1MF	10%	25V
C004	1-161-025-00	CERAMIC	0.1MF	10%	25V
C005	1-101-004-00	CERAMIC	0.01MF		50V
C007	1-102-518-00	CERAMIC	33PF	5%	50V
C008	1-102-518-00	CERAMIC	33PF	5%	50V
C009	1-123-318-00	ELECT	33MF	20%	16V
C010	1-161-025-00	CERAMIC	0.1MF	10%	25V
C011	1-161-025-00	CERAMIC	0.1MF	10%	25V
C012	1-161-025-00	CERAMIC	0.1MF	10%	25V
C013	1-101-004-00	CERAMIC	0.01MF		50V
C015	1-102-822-00	CERAMIC	390PF	5%	50V
C016	1-102-822-00	CERAMIC	390PF	5%	50V
C017	1-123-380-00	ELECT	1MF	20%	50V
C018	1-101-361-00	CERAMIC	150PF	10%	50V
C019	1-123-380-00	ELECT	1MF	20%	50V
C020	1-161-025-00	CERAMIC	0.1MF	10%	25V
C021	1-101-004-00	CERAMIC	0.01MF		50V
C022	1-123-332-00	ELECT	47MF	20%	16V
C023	1-161-025-00	CERAMIC	0.1MF	10%	25V
C025	1-102-978-00	CERAMIC	220PF	5%	50V
C026	1-102-978-00	CERAMIC	220PF	5%	50V
C027	1-102-522-00	CERAMIC	51PF	5%	50V
C028	1-102-531-00	CERAMIC	150PF	5%	50V
C029	1-102-531-00	CERAMIC	150PF	5%	50V
C030	1-102-520-00	CERAMIC	39PF	5%	50V
C031	1-123-356-00	ELECT	10MF	20%	16V
C033	1-101-004-00	CERAMIC	0.01MF		50V
C034	1-101-004-00	CERAMIC	0.01MF		50V
C035	1-123-382-00	ELECT	3.3MF	20%	50V
C036	1-123-382-00	ELECT	3.3MF	20%	50V
C037	1-101-004-00	CERAMIC	0.01MF		50V
C038	1-123-332-00	ELECT	47MF	20%	16V
C039	1-101-004-00	CERAMIC	0.01MF		50V
C040	1-101-004-00	CERAMIC	0.01MF		50V
C041	1-101-004-00	CERAMIC	0.01MF		50V

Ref.No	Part No.	Description			Remark
C042	1-101-004-00	CERAMIC	0.01MF		50V
C043	1-123-356-00	ELECT	10MF	20%	16V
C044	1-101-004-00	CERAMIC	0.01MF		50V
C045	1-101-004-00	CERAMIC	0.01MF		50V
C046	1-101-004-00	CERAMIC	0.01MF		50V
C047	1-123-356-00	ELECT	10MF	20%	16V
C048	1-123-356-00	ELECT	10MF	20%	16V
C049	1-123-356-00	ELECT	10MF	20%	16V
C050	1-123-318-00	ELECT	33MF	20%	16V
C051	1-123-318-00	ELECT	33MF	20%	16V
C052	1-123-356-00	ELECT	10MF	20%	16V
C053	1-123-356-00	ELECT	10MF	20%	16V
C054	1-101-004-00	CERAMIC	0.01MF		50V
C055	1-123-332-00	ELECT	47MF	20%	16V
C056	1-101-004-00	CERAMIC	0.01MF		50V
C057	1-101-004-00	CERAMIC	0.01MF		50V
C058	1-161-025-00	CERAMIC	0.1MF	10%	25V
C059	1-123-356-00	ELECT	10MF	20%	16V
C060	1-123-356-00	ELECT	10MF	20%	16V
C061	1-123-330-00	ELECT	22MF	20%	16V
C062	1-130-475-00	MYLAR	0.0022MF	5%	50V
C063	1-130-482-00	MYLAR	0.0082MF	5%	50V
C064	1-102-824-21	CERAMIC	470PF	5%	50V
C065	1-130-477-00	MYLAR	0.0033MF	5%	50V
C066	1-123-369-00	ELECT	4.7MF	20%	50V
C067	1-123-369-00	ELECT	4.7MF	20%	50V
C068	1-101-004-00	CERAMIC	0.01MF		50V
C069	1-123-333-00	ELECT	100MF	20%	16V
C070	1-123-356-00	ELECT	10MF	20%	16V
C071	1-123-332-00	ELECT	47MF	20%	16V
C072	1-123-332-00	ELECT	47MF	20%	16V
C073	1-102-958-00	CERAMIC	20PF	5%	50V
C074	1-130-485-00	MYLAR	0.015MF	5%	50V
C075	1-102-936-00	CERAMIC	3PF	0.25PF	50V
C076	1-130-485-00	MYLAR	0.015MF	5%	50V
C077	1-130-498-00	MYLAR	0.18MF	5%	50V
C078	1-130-485-00	MYLAR	0.015MF	5%	50V
C079	1-130-469-00	MYLAR	680PF	5%	50V
C080	1-130-475-00	MYLAR	0.0022MF	5%	50V
C081	1-102-936-00	CERAMIC	3PF	0.25PF	50V
C082	1-130-491-00	MYLAR	0.047MF	5%	50V
C083	1-123-330-00	ELECT	22MF	20%	16V
C084	1-130-493-00	MYLAR	0.068MF	5%	50V
C085	1-131-371-00	TANTALUM	10MF	10%	16V
C086	1-131-408-00	TANTALUM	1MF	10%	25V
C087	1-101-004-00	CERAMIC	0.01MF		50V
C088	1-123-333-00	ELECT	100MF	20%	16V
C096	1-123-356-00	ELECT	10MF	20%	16V
C100	1-123-356-00	ELECT	10MF	20%	16V
C101	1-123-332-00	ELECT	47MF	20%	16V
C102	1-123-332-00	ELECT	47MF	20%	16V
C103	1-123-381-00	ELECT	2.2MF	20%	50V
C104	1-123-332-00	ELECT	47MF	20%	16V

When indicating parts by reference number, please include the board name.

AF-14

Ref.No	Part No.	Description			Remark
C105	1-123-356-00	ELECT	10MF	20%	16V
C106	1-123-356-00	ELECT	10MF	20%	16V
C107	1-123-332-00	ELECT	47MF	20%	16V
C108	1-123-356-00	ELECT	10MF	20%	16V
C109	1-123-356-00	ELECT	10MF	20%	16V
C110	1-123-380-00	ELECT	1MF	20%	50V
C111	1-123-318-00	ELECT	33MF	20%	16V
C112	1-123-379-00	ELECT	0.47MF	20%	50V
C113	1-123-356-00	ELECT	10MF	20%	16V
C114	1-123-356-00	ELECT	10MF	20%	16V
C115	1-123-369-00	ELECT	4.7MF	20%	50V
C116	1-123-330-00	ELECT	22MF	20%	16V
C117	1-123-330-00	ELECT	22MF	20%	16V
C118	1-102-961-00	CERAMIC	27PF	10%	50V
C119	1-102-961-00	CERAMIC	27PF	10%	50V
C120	1-123-369-00	ELECT	4.7MF	20%	50V
C121	1-123-356-00	ELECT	10MF	20%	16V
C122	1-123-356-00	ELECT	10MF	20%	16V
C123	1-130-471-00	MYLAR	0.001MF	5%	50V
C124	1-130-471-00	MYLAR	0.001MF	5%	50V
C125	1-123-356-00	ELECT	10MF	20%	16V
C126	1-123-356-00	ELECT	10MF	20%	16V
C127	1-123-356-00	ELECT	10MF	20%	16V
C128	1-123-356-00	ELECT	10MF	20%	16V
C129	1-123-356-00	ELECT	10MF	20%	16V
C130	1-123-356-00	ELECT	10MF	20%	16V
C131	1-123-356-00	ELECT	10MF	20%	16V
C132	1-123-356-00	ELECT	10MF	20%	16V
C133	1-123-356-00	ELECT	10MF	20%	16V
C134	1-123-330-00	ELECT	22MF	20%	16V
C135	1-123-332-00	ELECT	47MF	20%	16V
C136	1-123-330-00	ELECT	22MF	20%	16V
C137	1-123-356-00	ELECT	10MF	20%	16V
C138	1-123-356-00	ELECT	10MF	20%	16V
C139	1-123-330-00	ELECT	22MF	20%	16V
C140	1-123-356-00	ELECT	10MF	20%	16V
C141	1-123-356-00	ELECT	10MF	20%	16V
C142	1-123-332-00	ELECT	47MF	20%	16V
C143	1-123-330-00	ELECT	22MF	20%	16V
C144	1-123-330-00	ELECT	22MF	20%	16V
C145	1-123-356-00	ELECT	10MF	20%	16V
C146	1-123-330-00	ELECT	22MF	20%	16V
C147	1-123-330-00	ELECT	22MF	20%	16V
C148	1-123-356-00	ELECT	10MF	20%	16V
C149	1-123-356-00	ELECT	10MF	20%	16V
C150	1-123-356-00	ELECT	10MF	20%	16V
C151	1-130-478-00	MYLAR	0.0039MF	5%	50V
C152	1-130-476-00	MYLAR	0.0027MF	5%	50V
C153	1-130-474-00	MYLAR	0.0018MF	5%	50V
C154	1-130-478-00	MYLAR	0.0039MF	5%	50V
C155	1-130-476-00	MYLAR	0.0027MF	5%	50V
C156	1-130-474-00	MYLAR	0.0018MF	5%	50V
C157	1-131-408-00	TANTALUM	1MF	10%	25V

Ref.No	Part No.	Description			Remark
C158	1-131-371-00	TANTALUM	10MF	10%	16V
C159	1-130-493-00	MYLAR	0.068MF	5%	50V
C160	1-123-330-00	ELECT	22MF	20%	16V
C161	1-130-491-00	MYLAR	0.047MF	5%	50V
C162	1-102-936-00	CERAMIC	3PF	0.25PF	50V
C163	1-130-475-00	MYLAR	0.0022MF	5%	50V
C164	1-130-469-00	MYLAR	680PF	5%	50V
C165	1-130-485-00	MYLAR	0.015MF	5%	50V
C166	1-130-498-00	MYLAR	0.18MF	5%	50V
C167	1-130-485-00	MYLAR	0.015MF	5%	50V
C168	1-130-485-00	MYLAR	0.015MF	5%	50V
C169	1-102-958-00	CERAMIC	20PF	5%	50V
C170	1-123-332-00	ELECT	47MF	20%	16V
C171	1-123-332-00	ELECT	47MF	20%	16V
C172	1-123-356-00	ELECT	10MF	20%	16V
C173	1-101-004-00	CERAMIC	0.01MF		50V
C174	1-123-333-00	ELECT	100MF	20%	16V
C175	1-101-004-00	CERAMIC	0.01MF		50V
C176	1-101-004-00	CERAMIC	0.01MF		50V
C177	1-123-356-00	ELECT	10MF	20%	16V
C178	1-123-356-00	ELECT	10MF	20%	16V
C179	1-123-356-00	ELECT	10MF	20%	16V
C180	1-123-318-00	ELECT	33MF	20%	16V
C181	1-123-318-00	ELECT	33MF	20%	16V
C182	1-123-356-00	ELECT	10MF	20%	16V
C183	1-123-356-00	ELECT	10MF	20%	16V
C184	1-123-381-00	ELECT	2.2MF	20%	50V
C185	1-123-380-00	ELECT	1MF	20%	50V
C186	1-123-380-00	ELECT	1MF	20%	50V
C187	1-101-004-00	CERAMIC	0.01MF		50V
C188	1-123-332-00	ELECT	47MF	20%	16V
C189	1-123-369-00	ELECT	4.7MF	20%	50V
C190	1-123-369-00	ELECT	4.7MF	20%	50V
C191	1-130-477-00	MYLAR	0.0033MF	5%	50V
C192	1-130-482-00	MYLAR	0.0082MF	5%	50V
C193	1-102-824-21	CERAMIC	470PF	5%	50V
C194	1-130-475-00	MYLAR	0.0022MF	5%	50V
C195	1-123-330-00	ELECT	22MF	20%	16V
C196	1-123-356-00	ELECT	10MF	20%	16V
C197	1-123-356-00	ELECT	10MF	20%	16V
C198	1-123-379-00	ELECT	0.47MF	20%	50V
C199	1-101-004-00	CERAMIC	0.01MF		50V
C200	1-101-004-00	CERAMIC	0.01MF		50V
C201	1-101-004-00	CERAMIC	0.01MF		50V
C202	1-101-004-00	CERAMIC	0.01MF		50V
C203	1-101-004-00	CERAMIC	0.01MF		50V
C204	1-101-004-00	CERAMIC	0.01MF		50V
C205	1-123-382-00	ELECT	3.3MF	20%	50V
C207	1-123-382-00	ELECT	3.3MF	20%	50V
C208	1-101-004-00	CERAMIC	0.01MF		50V
C209	1-101-004-00	CERAMIC	0.01MF		50V
C210	1-123-356-00	ELECT	10MF	20%	16V
C211	1-101-004-00	CERAMIC	0.01MF		50V

When indicating parts by reference number, please include the board name.

Ref.No	Part No.	Description			Remark
C212	1-123-356-00	ELECT	10MF	20%	16V
C213	1-161-025-00	CERAMIC	0.1MF	10%	25V
C214	1-123-332-00	ELECT	47MF	20%	16V
C215	1-123-333-00	ELECT	100MF	20%	16V
C216	1-161-025-00	CERAMIC	0.1MF	10%	25V
C217	1-123-333-00	ELECT	100MF	20%	16V
C218	1-102-936-00	CERAMIC	3PF	0.25PF	50V
C601	1-101-004-00	CERAMIC	0.01MF		50V
C602	1-101-004-00	CERAMIC	0.01MF		50V
C603	1-101-004-00	CERAMIC	0.01MF		50V
C604	1-101-004-00	CERAMIC	0.01MF		50V
C605	1-123-356-00	ELECT	10MF	20%	16V
C606	1-101-004-00	CERAMIC	0.01MF		50V
C607	1-123-356-00	ELECT	10MF	20%	16V
C608	1-123-333-00	ELECT	100MF	20%	16V
C609	1-101-004-00	CERAMIC	0.01MF		50V
C610	1-123-356-00	ELECT	10MF	20%	16V
C611	1-123-332-00	ELECT	47MF	20%	16V
C616	1-123-356-00	ELECT	10MF	20%	16V
C617	1-123-323-00	ELECT	470MF	20%	16V
C618	1-123-356-00	ELECT	10MF	20%	16V
C619	1-123-356-00	ELECT	10MF	20%	16V
C620	1-123-356-00	ELECT	10MF	20%	16V
C621	1-123-333-00	ELECT	100MF	20%	16V
C622	1-102-127-21	CERAMIC	0.0068MF	10%	50V
C623	1-102-127-21	CERAMIC	0.0068MF	10%	50V
C624	1-123-356-00	ELECT	10MF	20%	16V
C625	1-101-004-00	CERAMIC	0.01MF		50V
C626	1-101-004-00	CERAMIC	0.01MF		50V
C629	1-130-495-00	MYLAR	0.1MF	5%	50V
C650	1-101-004-00	CERAMIC	0.01MF		50V
C651	1-101-004-00	CERAMIC	0.01MF		50V
C652	1-102-074-00	CERAMIC	0.001MF	10%	50V
C653	1-101-004-00	CERAMIC	0.01MF		50V
C654	1-101-004-00	CERAMIC	0.01MF		50V
C655	1-102-074-00	CERAMIC	0.001MF	10%	50V

CONNECTOR

CN001	*1-564-031-00	PIN, CONNECTOR 6P	
CN002	*1-564-030-00	PIN, CONNECTOR 5P	
CN003	*1-560-893-00	PIN, CONNECTOR 5P	
CN004	*1-560-891-00	PIN, CONNECTOR 3P	
CN005	*1-560-898-00	PIN, CONNECTOR 10P	
CN006	*1-560-895-00	PIN, CONNECTOR 7P	
CN007	*1-560-891-00	PIN, CONNECTOR 3P	
CN008	*1-560-893-00	PIN, CONNECTOR 5P	
CN009	*1-560-896-00	PIN, CONNECTOR 8P	
CN010	*1-560-894-00	PIN, CONNECTOR 6P	
CN011	*1-560-893-00	PIN, CONNECTOR 5P	
CN012	*1-560-896-00	PIN, CONNECTOR 8P	
CN013	*1-560-894-00	PIN, CONNECTOR 6P	
CN014	*1-560-897-00	PIN, CONNECTOR 9P	
CN015	*1-564-028-00	PIN, CONNECTOR 3P	

Ref.No	Part No.	Description	Remark
CN016	*1-560-890-00	PIN, CONNECTOR 2P	

DIODE

D001	8-719-911-19	DIODE 1SS119	
D002	8-719-911-19	DIODE 1SS119	
D003	8-719-911-19	DIODE 1SS119	
D004	8-719-911-19	DIODE 1SS119	
D005	8-719-911-19	DIODE 1SS119	
D006	8-719-911-19	DIODE 1SS119	
D007	8-719-911-19	DIODE 1SS119	
D008	8-719-000-04	DIODE MC911	
D010	8-719-000-12	DIODE MC931	
D013	8-719-911-19	DIODE 1SS119	
D014	8-719-911-19	DIODE 1SS119	
D015	8-719-000-06	DIODE MC921	
D016	8-719-911-19	DIODE 1SS119	
D017	8-719-911-19	DIODE 1SS119	
D018	8-719-911-19	DIODE 1SS119	
D019	8-719-911-19	DIODE 1SS119	
D020	8-719-000-12	DIODE MC931	
D022	8-719-101-61	DIODE RD6.2EL2	
D023	8-719-911-19	DIODE 1SS119	
D024	8-719-000-06	DIODE MC921	
D025	8-719-000-06	DIODE MC921	
D026	8-719-000-12	DIODE MC931	
D027	8-719-911-19	DIODE 1SS119	
D029	8-719-102-73	DIODE RD6.2EN1	
D601	8-719-911-19	DIODE 1SS119	
D602	8-719-911-19	DIODE 1SS119	
D603	8-719-911-19	DIODE 1SS119	
D604	8-719-911-19	DIODE 1SS119	
D605	8-719-911-19	DIODE 1SS119	
D606	8-719-911-19	DIODE 1SS119	
D607	8-719-911-19	DIODE 1SS119	
D608	8-719-911-19	DIODE 1SS119	
D609	8-719-101-86	DIODE RD13EL2	
D610	8-719-911-19	DIODE 1SS119	
D611	8-719-000-06	DIODE MC921	

IC

IC001	8-752-010-40	IC CX20104
IC002	8-752-010-50	IC CX20105
IC003	8-752-009-71	IC CX20097A
IC004	8-752-010-50	IC CX20105
IC007	8-759-240-66	IC TC4066BP
IC009	8-759-700-62	IC NJM4562D
IC010	8-759-240-66	IC TC4066BP
IC011	8-759-922-43	IC TK15052D
IC012	8-759-915-48	IC TK15011Z
IC013	8-759-145-58	IC UPC4558C

COIL

L001	1-408-421-00	MICRO INDUCTOR 100UH

When indicating parts by reference number, please include the board name.

AF-14

Ref.No	Part No.	Description	Remark
L002	1-408-405-00	MICRO INDUCTOR 4.7UH	
L003	1-408-421-00	MICRO INDUCTOR 100UH	
L004	1-408-405-00	MICRO INDUCTOR 4.7UH	
L005	1-408-421-00	MICRO INDUCTOR 100UH	
L006	1-408-418-00	MICRO INDUCTOR 56UH	
L007	1-408-609-41	MICRO INDUCTOR 33UH	
L008	1-408-416-00	MICRO INDUCTOR 39UH	
L009	1-408-413-00	MICRO INDUCTOR 22UH	
		L.P.F	
LPF001	1-235-365-11	L.P.F	
LPF002	1-235-365-11	L.P.F	
		IC LINK	
PS001⚠	1-532-605-11	LINK, IC	
		TRANSISTOR	
Q001	8-729-900-89	TRANSISTOR DTC144ES	
Q002	8-729-204-83	TRANSISTOR 2SA1048	
Q003	8-729-800-42	TRANSISTOR 2SK152	
Q004	8-729-204-83	TRANSISTOR 2SA1048	
Q005	8-729-245-83	TRANSISTOR 2SC2458	
Q006	8-729-900-89	TRANSISTOR DTC144ES	
Q007	8-729-900-89	TRANSISTOR DTC144ES	
Q008	8-729-800-42	TRANSISTOR 2SK152	
Q009	8-729-204-83	TRANSISTOR 2SA1048	
Q010	8-729-245-83	TRANSISTOR 2SC2458	
Q011	8-729-900-89	TRANSISTOR DTC144ES	
Q012	8-729-900-89	TRANSISTOR DTC144ES	
Q013	8-729-113-33	TRANSISTOR 2SB733	
Q014	8-729-117-54	TRANSISTOR 2SA1175	
Q015	8-729-603-30	TRANSISTOR 2SC403SP	
Q016	8-729-603-30	TRANSISTOR 2SC403SP	
Q017	8-729-603-30	TRANSISTOR 2SC403SP	
Q018	8-729-204-83	TRANSISTOR 2SA1048	
Q019	8-729-900-89	TRANSISTOR DTC144ES	
Q020	8-729-204-83	TRANSISTOR 2SA1048	
Q021	8-729-900-89	TRANSISTOR DTC144ES	
Q022	8-729-178-54	TRANSISTOR 2SC2785	
Q023	8-729-245-83	TRANSISTOR 2SC2458	
Q024	8-729-245-83	TRANSISTOR 2SC2458	
Q025	8-729-245-83	TRANSISTOR 2SC2458	
Q026	8-729-900-89	TRANSISTOR DTC144ES	
Q027	8-729-245-83	TRANSISTOR 2SC2458	
Q028	8-729-900-89	TRANSISTOR DTC144ES	
Q029	8-729-900-89	TRANSISTOR DTC144ES	
Q030	8-729-245-83	TRANSISTOR 2SC2458	
Q031	8-729-245-83	TRANSISTOR 2SC2458	
Q032	8-729-245-83	TRANSISTOR 2SC2458	
Q033	8-729-245-83	TRANSISTOR 2SC2458	
Q034	8-729-900-80	TRANSISTOR DTC114ES	
Q035	8-729-900-80	TRANSISTOR DTC114ES	

Ref.No	Part No.	Description	Remark
Q036	8-729-900-80	TRANSISTOR DTC114ES	
Q037	8-729-900-80	TRANSISTOR DTC114ES	
Q038	8-729-900-80	TRANSISTOR DTC114ES	
Q039	8-729-900-80	TRANSISTOR DTC114ES	
Q040	8-729-900-89	TRANSISTOR DTC144ES	
Q041	8-729-204-83	TRANSISTOR 2SA1048	
Q042	8-729-204-83	TRANSISTOR 2SA1048	
Q043	8-729-900-89	TRANSISTOR DTC144ES	
Q044	8-729-177-43	TRANSISTOR 2SD774	
Q048	8-729-900-89	TRANSISTOR DTC144ES	
Q050	8-729-900-89	TRANSISTOR DTC144ES	
Q501	8-729-245-83	TRANSISTOR 2SC2458	
Q502	8-729-245-83	TRANSISTOR 2SC2458	
Q503	8-729-245-83	TRANSISTOR 2SC2458	
Q601	8-729-245-83	TRANSISTOR 2SC2458	
Q602	8-729-245-83	TRANSISTOR 2SC2458	
Q603	8-729-245-83	TRANSISTOR 2SC2458	
Q604	8-729-245-83	TRANSISTOR 2SC2458	
Q605	8-729-900-89	TRANSISTOR DTC144ES	
Q607	8-729-900-89	TRANSISTOR DTC144ES	
Q608	8-729-245-83	TRANSISTOR 2SC2458	
Q609	8-729-245-83	TRANSISTOR 2SC2458	
Q610	8-729-900-89	TRANSISTOR DTC144ES	
Q611	8-729-178-54	TRANSISTOR 2SC2785	
Q612	8-729-245-83	TRANSISTOR 2SC2458	
Q613	8-729-245-83	TRANSISTOR 2SC2458	
Q614	8-729-245-83	TRANSISTOR 2SC2458	
Q615	8-729-245-83	TRANSISTOR 2SC2458	
Q616	8-729-245-83	TRANSISTOR 2SC2458	
Q619⚠	8-729-113-33	TRANSISTOR 2SB733	
Q621⚠	8-729-113-33	TRANSISTOR 2SB733	
Q623	8-729-900-89	TRANSISTOR DTC144ES	
Q624	8-729-900-89	TRANSISTOR DTC144ES	
Q625	8-729-245-83	TRANSISTOR 2SC2458	
Q626	8-729-245-83	TRANSISTOR 2SC2458	
Q627	8-729-245-83	TRANSISTOR 2SC2458	
Q628	8-729-900-89	TRANSISTOR DTC144ES	
Q629	8-729-245-83	TRANSISTOR 2SC2458	
Q650	8-729-245-83	TRANSISTOR 2SC2458	
Q651	8-729-245-83	TRANSISTOR 2SC2458	
		RESISTOR	
R001	1-247-849-00	CARBON 5.6K 5% 1/6W	
R002	1-247-831-00	CARBON 1K 5% 1/6W	
R003	1-247-832-00	CARBON 470 5% 1/6W	
R004	1-247-827-00	CARBON 680 5% 1/6W	
R005	1-247-827-00	CARBON 680 5% 1/6W	
R006	1-247-843-00	CARBON 3.3K 5% 1/6W	
R007	1-249-421-11	CARBON 2.2K 5% 1/6W	
R008	1-247-831-00	CARBON 1K 5% 1/6W	
R009	1-247-831-00	CARBON 1K 5% 1/6W	
R010	1-247-831-00	CARBON 1K 5% 1/6W	
R011	1-247-831-00	CARBON 1K 5% 1/6W	

The components identified by shading and mark ⚠ are critical for safety. Replace only with part number specified.

When indicating parts by reference number, please include the board name.

Ref.No	Part No.	Description				Remark
R012	1-247-807-00	CARBON	100	5%	1/6W	
R013	1-247-849-00	CARBON	5.6K	5%	1/6W	
R014	1-247-831-00	CARBON	1K	5%	1/6W	
R015	1-247-831-00	CARBON	1K	5%	1/6W	
R016	1-247-827-00	CARBON	680	5%	1/6W	
R017	1-247-827-00	CARBON	680	5%	1/6W	
R018	1-247-843-00	CARBON	3.3K	5%	1/6W	
R019	1-249-421-11	CARBON	2.2K	5%	1/6W	
R020	1-247-831-00	CARBON	1K	5%	1/6W	
R021	1-247-831-00	CARBON	1K	5%	1/6W	
R022	1-247-831-00	CARBON	1K	5%	1/6W	
R023	1-247-831-00	CARBON	1K	5%	1/6W	
R024	1-247-847-00	CARBON	4.7K	5%	1/6W	
R025	1-247-847-00	CARBON	4.7K	5%	1/6W	
R026	1-247-857-00	CARBON	12K	5%	1/6W	
R027	1-247-869-00	CARBON	39K	5%	1/6W	
R028 ⚠	1-213-128-61	METAL OXIDE	56	5%	1W	F
R029	1-247-826-00	CARBON	620	5%	1/6W	
R030	1-214-673-00	METAL	4.7	1%	1/4W	
R031	1-247-823-00	CARBON	470	5%	1/6W	
R032	1-247-820-00	CARBON	360	5%	1/6W	
R033	1-247-799-00	CARBON	47	5%	1/6W	
R034	1-247-831-00	CARBON	1K	5%	1/6W	
R035	1-247-819-00	CARBON	330	5%	1/6W	
R036	1-249-429-11	CARBON	10K	5%	1/6W	
R037	1-247-853-00	CARBON	8.2K	5%	1/6W	
R038	1-215-436-00	METAL	4.3K	1%	1/6W	
R039	1-215-423-00	METAL	1.2K	1%	1/6W	
R040	1-247-847-00	CARBON	4.7K	5%	1/6W	
R041	1-247-847-00	CARBON	4.7K	5%	1/6W	
R042	1-247-861-00	CARBON	18K	5%	1/6W	
R043	1-247-861-00	CARBON	18K	5%	1/6W	
R044	1-247-861-00	CARBON	18K	5%	1/6W	
R045	1-247-861-00	CARBON	18K	5%	1/6W	
R046 ⚠	1-212-853-51	FUSIBLE	6.8	5%	1/4W	F
R047	1-247-823-00	CARBON	470	5%	1/6W	
R048	1-247-823-00	CARBON	470	5%	1/6W	
R049	1-247-851-00	CARBON	6.8K	5%	1/6W	
R050	1-247-837-00	CARBON	1.8K	5%	1/6W	
R051	1-247-821-00	CARBON	390	5%	1/6W	
R052	1-247-859-00	CARBON	15K	5%	1/6W	
R053	1-247-857-00	CARBON	12K	5%	1/6W	
R054	1-247-863-00	CARBON	22K	5%	1/6W	
R055	1-247-852-00	CARBON	7.5K	5%	1/6W	
R056	1-247-848-00	CARBON	5.1K	5%	1/6W	
R057	1-249-421-11	CARBON	2.2K	5%	1/6W	
R058	1-247-861-00	CARBON	18K	5%	1/6W	
R059	1-249-421-11	CARBON	2.2K	5%	1/6W	
R060	1-249-421-11	CARBON	2.2K	5%	1/6W	
R061	1-247-861-00	CARBON	18K	5%	1/6W	
R062	1-247-898-00	CARBON	620K	5%	1/6W	
R063	1-247-843-00	CARBON	3.3K	5%	1/6W	
R064	1-247-843-00	CARBON	3.3K	5%	1/6W	

Ref.No	Part No.	Description				Remark
R065	1-247-843-00	CARBON	3.3K	5%	1/6W	
R066	1-247-807-00	CARBON	100	5%	1/6W	
R067	1-215-433-00	METAL	3.3K	1%	1/6W	
R068	1-247-859-00	CARBON	15K	5%	1/6W	
R069	1-247-824-00	CARBON	510	5%	1/6W	
R070	1-249-429-11	CARBON	10K	5%	1/6W	
R071	1-247-840-00	CARBON	2.4K	5%	1/6W	
R072	1-249-429-11	CARBON	10K	5%	1/6W	
R073	1-249-429-11	CARBON	10K	5%	1/6W	
R074	1-247-843-00	CARBON	3.3K	5%	1/6W	
R075	1-247-814-00	CARBON	200	5%	1/6W	
R076	1-247-834-00	CARBON	1.3K	5%	1/6W	
R077	1-247-858-00	CARBON	13K	5%	1/6W	
R078	1-247-838-00	CARBON	2K	5%	1/6W	
R079	1-247-858-00	CARBON	13K	5%	1/6W	
R080	1-249-429-11	CARBON	10K	5%	1/6W	
R081	1-247-833-00	CARBON	1.2K	5%	1/6W	
R082	1-247-895-00	CARBON	470K	5%	1/6W	
R083	1-247-834-00	CARBON	1.3K	5%	1/6W	
R084	1-247-853-00	CARBON	8.2K	5%	1/6W	
R085	1-249-434-11	CARBON	27K	5%	1/6W	
R086	1-247-825-00	CARBON	560	5%	1/6W	
R087	1-247-824-00	CARBON	510	5%	1/6W	
R102	1-247-831-00	CARBON	1K	5%	1/6W	
R109	1-247-847-00	CARBON	4.7K	5%	1/6W	
R110	1-247-847-00	CARBON	4.7K	5%	1/6W	
R114	1-247-831-00	CARBON	1K	5%	1/6W	
R115	1-249-437-11	CARBON	47K	5%	1/6W	
R116	1-249-437-11	CARBON	47K	5%	1/6W	
R117	1-247-879-00	CARBON	100K	5%	1/6W	
R118	1-247-881-00	CARBON	120K	5%	1/6W	
R119	1-247-847-00	CARBON	4.7K	5%	1/6W	
R120	1-247-847-00	CARBON	4.7K	5%	1/6W	
R121	1-249-437-11	CARBON	47K	5%	1/6W	
R122	1-249-437-11	CARBON	47K	5%	1/6W	
R123	1-249-437-11	CARBON	47K	5%	1/6W	
R124	1-249-421-11	CARBON	2.2K	5%	1/6W	
R125	1-249-419-11	CARBON	1.5K	5%	1/6W	
R126	1-247-869-00	CARBON	39K	5%	1/6W	
R127	1-249-429-11	CARBON	10K	5%	1/6W	
R128	1-247-813-00	CARBON	180	5%	1/6W	
R129	1-247-863-00	CARBON	22K	5%	1/6W	
R130	1-249-429-11	CARBON	10K	5%	1/6W	
R131	1-247-817-00	CARBON	270	5%	1/6W	
R132	1-247-873-00	CARBON	56K	5%	1/6W	
R133	1-247-867-00	CARBON	33K	5%	1/6W	
R134	1-247-849-00	CARBON	5.6K	5%	1/6W	
R135	1-247-847-00	CARBON	4.7K	5%	1/6W	
R136	1-247-847-00	CARBON	4.7K	5%	1/6W	
R137	1-247-849-00	CARBON	5.6K	5%	1/6W	
R138	1-249-429-11	CARBON	10K	5%	1/6W	
R139	1-249-429-11	CARBON	10K	5%	1/6W	
R140	1-247-807-00	CARBON	100	5%	1/6W	

The components identified by shading and mark ⚠ are critical for safety. Replace only with part number specified.

When indicating parts by reference number, please include the board name.

AF-14

Ref.No	Part No.	Description				Remark
R141	1-247-807-00	CARBON	100	5%	1/6W	
R142	1-249-421-11	CARBON	2.2K	5%	1/6W	
R143	1-249-421-11	CARBON	2.2K	5%	1/6W	
R144	1-249-429-11	CARBON	10K	5%	1/6W	
R145	1-249-429-11	CARBON	10K	5%	1/6W	
R146	1-249-429-11	CARBON	10K	5%	1/6W	
R147	1-249-421-11	CARBON	2.2K	5%	1/6W	
R148	1-249-437-11	CARBON	47K	5%	1/6W	
R152	1-215-462-00	METAL	51K	1%	1/6W	
R153	1-247-815-00	CARBON	220	5%	1/6W	
R154	1-215-465-00	METAL	68K	1%	1/6W	
R155	1-215-446-00	METAL	11K	1%	1/6W	
R156	1-215-465-00	METAL	68K	1%	1/6W	
R157	1-215-446-00	METAL	11K	1%	1/6W	
R158	1-215-462-00	METAL	51K	1%	1/6W	
R159	1-249-437-11	CARBON	47K	5%	1/6W	
R160	1-249-429-11	CARBON	10K	5%	1/6W	
R161	1-249-437-11	CARBON	47K	5%	1/6W	
R162	1-247-815-00	CARBON	220	5%	1/6W	
R163	1-249-429-11	CARBON	10K	5%	1/6W	
R164	1-249-429-11	CARBON	10K	5%	1/6W	
R165	1-215-429-00	METAL	2.2K	1%	1/6W	
R166	1-215-429-00	METAL	2.2K	1%	1/6W	
R167	1-249-429-11	CARBON	10K	5%	1/6W	
R168	1-249-429-11	CARBON	10K	5%	1/6W	
R169	1-247-843-00	CARBON	3.3K	5%	1/6W	
R170	1-247-849-00	CARBON	5.6K	5%	1/6W	
R171	1-247-851-00	CARBON	6.8K	5%	1/6W	
R172	1-247-841-00	CARBON	2.7K	5%	1/6W	
R175	1-247-824-00	CARBON	510	5%	1/6W	
R176	1-247-836-00	CARBON	1.6K	5%	1/6W	
R177	1-247-825-00	CARBON	560	5%	1/6W	
R178	1-249-434-11	CARBON	27K	5%	1/6W	
R179	1-247-853-00	CARBON	8.2K	5%	1/6W	
R180	1-247-834-00	CARBON	1.3K	5%	1/6W	
R181	1-247-838-00	CARBON	2K	5%	1/6W	
R182	1-247-858-00	CARBON	13K	5%	1/6W	
R183	1-247-895-00	CARBON	470K	5%	1/6W	
R184	1-247-858-00	CARBON	13K	5%	1/6W	
R185	1-249-429-11	CARBON	10K	5%	1/6W	
R186	1-247-833-00	CARBON	1.2K	5%	1/6W	
R187	1-247-843-00	CARBON	3.3K	5%	1/6W	
R188	1-247-834-00	CARBON	1.3K	5%	1/6W	
R189	1-247-814-00	CARBON	200	5%	1/6W	
R190	1-249-429-11	CARBON	10K	5%	1/6W	
R191	1-249-429-11	CARBON	10K	5%	1/6W	
R192	1-247-840-00	CARBON	2.4K	5%	1/6W	
R193	1-249-429-11	CARBON	10K	5%	1/6W	
R194	1-247-824-00	CARBON	510	5%	1/6W	
R195	1-247-859-00	CARBON	15K	5%	1/6W	
R196	1-247-807-00	CARBON	100	5%	1/6W	
R197	1-215-433-00	METAL	3.3K	1%	1/6W	
R198	1-247-848-00	CARBON	5.1K	5%	1/6W	

Ref.No	Part No.	Description				Remark
R199	1-249-429-11	CARBON	10K	5%	1/6W	
R200	1-247-861-00	CARBON	18K	5%	1/6W	
R201	1-249-421-11	CARBON	2.2K	5%	1/6W	
R202	1-247-861-00	CARBON	18K	5%	1/6W	
R203	1-249-421-11	CARBON	2.2K	5%	1/6W	
R206	1-247-843-00	CARBON	3.3K	5%	1/6W	
R207	1-247-843-00	CARBON	3.3K	5%	1/6W	
R208	1-247-843-00	CARBON	3.3K	5%	1/6W	
R209	1-247-883-00	CARBON	150K	5%	1/6W	
R210	1-247-864-00	CARBON	24K	5%	1/6W	
R211	1-247-898-00	CARBON	620K	5%	1/6W	
R212	1-247-847-00	CARBON	4.7K	5%	1/6W	
R213	1-247-843-00	CARBON	3.3K	5%	1/6W	
R214	1-247-841-00	CARBON	2.7K	5%	1/6W	
R215	1-249-419-11	CARBON	1.5K	5%	1/6W	
R216	1-247-857-00	CARBON	12K	5%	1/6W	
R217	1-247-864-00	CARBON	24K	5%	1/6W	
R218	1-247-861-00	CARBON	18K	5%	1/6W	
R219	1-249-437-11	CARBON	47K	5%	1/6W	
R220	1-247-821-00	CARBON	390	5%	1/6W	
R221	1-247-859-00	CARBON	15K	5%	1/6W	
R222	1-247-837-00	CARBON	1.8K	5%	1/6W	
R223	1-247-851-00	CARBON	6.8K	5%	1/6W	
R225	1-247-847-00	CARBON	4.7K	5%	1/6W	
R226	1-247-847-00	CARBON	4.7K	5%	1/6W	
R227	⚠ 1-212-853-51	FUSIBLE	6.8	5%	1/4W	F
R228	1-247-829-00	CARBON	820	5%	1/6W	
R229	1-247-819-00	CARBON	330	5%	1/6W	
R230	1-247-827-00	CARBON	680	5%	1/6W	
R231	1-247-847-00	CARBON	4.7K	5%	1/6W	
R232	1-247-849-00	CARBON	5.6K	5%	1/6W	
R233	1-247-823-00	CARBON	470	5%	1/6W	
R239	1-247-847-00	CARBON	4.7K	5%	1/6W	
R241	1-247-879-00	CARBON	100K	5%	1/6W	
R244	1-247-875-00	CARBON	68K	5%	1/6W	
R501	1-249-437-11	CARBON	47K	5%	1/6W	
R502	1-249-437-11	CARBON	47K	5%	1/6W	
R503	1-249-437-11	CARBON	47K	5%	1/6W	
R601	1-247-849-00	CARBON	5.6K	5%	1/6W	
R602	1-247-837-00	CARBON	1.8K	5%	1/6W	
R603	1-247-850-00	CARBON	6.2K	5%	1/6W	
R604	1-249-434-11	CARBON	27K	5%	1/6W	
R605	1-247-851-00	CARBON	6.8K	5%	1/6W	
R606	1-247-819-00	CARBON	330	5%	1/6W	
R607	1-247-851-00	CARBON	6.8K	5%	1/6W	
R608	1-247-851-00	CARBON	6.8K	5%	1/6W	
R610	1-247-846-00	CARBON	4.3K	5%	1/6W	
R611	1-249-429-11	CARBON	10K	5%	1/6W	
R612	1-247-831-00	CARBON	1K	5%	1/6W	
R613	1-247-857-00	CARBON	12K	5%	1/6W	
R614	1-247-857-00	CARBON	12K	5%	1/6W	
R615	1-247-825-00	CARBON	560	5%	1/6W	
R616	1-247-847-00	CARBON	4.7K	5%	1/6W	

The components identified by shading and mark ⚠ are critical for safety. Replace only with part number specified.

When indicating parts by reference number, please include the board name.

Ref.No	Part No.	Description				Remark
R617	1-247-831-00	CARBON	1K	5%	1/6W	
R618	1-249-429-11	CARBON	10K	5%	1/6W	
R619	1-249-429-11	CARBON	10K	5%	1/6W	
R620	1-247-831-00	CARBON	1K	5%	1/6W	
R625	1-247-847-00	CARBON	4.7K	5%	1/6W	
R626	1-247-831-00	CARBON	1K	5%	1/6W	
R627	1-249-421-11	CARBON	2.2K	5%	1/6W	
R628	1-247-831-00	CARBON	1K	5%	1/6W	
R632	1-247-847-00	CARBON	4.7K	5%	1/6W	
R633	1-247-847-00	CARBON	4.7K	5%	1/6W	
R634	1-247-825-00	CARBON	560	5%	1/6W	
R635	1-247-847-00	CARBON	4.7K	5%	1/6W	
R636	1-247-847-00	CARBON	4.7K	5%	1/6W	
R638	1-247-847-00	CARBON	4.7K	5%	1/6W	
R639	⚠1-247-827-91	CARBON	680	5%	1/6W	
R640	1-247-847-00	CARBON	4.7K	5%	1/6W	
R641	⚠1-247-827-91	CARBON	680	5%	1/6W	
R642	⚠1-212-849-51	FUSIBLE	4.7	5%	1/4W	F
R643	1-247-851-00	CARBON	6.8K	5%	1/6W	
R644	1-247-847-00	CARBON	4.7K	5%	1/6W	
R650	1-247-843-00	CARBON	3.3K	5%	1/6W	
R651	1-247-879-00	CARBON	100K	5%	1/6W	
R652	1-247-859-00	CARBON	15K	5%	1/6W	
R653	1-247-851-00	CARBON	6.8K	5%	1/6W	
R654	1-247-831-00	CARBON	1K	5%	1/6W	
R655	1-247-843-00	CARBON	3.3K	5%	1/6W	
R656	1-247-879-00	CARBON	100K	5%	1/6W	
R657	1-247-859-00	CARBON	15K	5%	1/6W	
R658	1-247-851-00	CARBON	6.8K	5%	1/6W	
R659	1-247-831-00	CARBON	1K	5%	1/6W	
R660	1-247-831-00	CARBON	1K	5%	1/6W	
R661	1-247-831-00	CARBON	1K	5%	1/6W	
R662	1-247-847-00	CARBON	4.7K	5%	1/6W	
R663	1-247-887-00	CARBON	220K	5%	1/6W	
R664	1-247-887-00	CARBON	220K	5%	1/6W	
R665	1-249-437-11	CARBON	47K	5%	1/6W	
R666	1-247-895-00	CARBON	470K	5%	1/6W	
R667	1-247-863-00	CARBON	22K	5%	1/6W	
R668	1-249-437-11	CARBON	47K	5%	1/6W	
R669	1-247-895-00	CARBON	470K	5%	1/6W	
R670	1-247-863-00	CARBON	22K	5%	1/6W	
R671	1-249-429-11	CARBON	10K	5%	1/6W	
R672	1-215-415-00	METAL	560	1%	1/6W	
R675	1-247-843-00	CARBON	3.3K	5%	1/6W	
R676	1-249-421-11	CARBON	2.2K	5%	1/6W	
R677	1-247-849-00	CARBON	5.6K	5%	1/6W	
R678	1-247-879-00	CARBON	100K	5%	1/6W	
R679	1-247-879-00	CARBON	100K	5%	1/6W	
R680	1-249-437-11	CARBON	47K	5%	1/6W	
R681	1-249-437-11	CARBON	47K	5%	1/6W	
R682	1-247-879-00	CARBON	100K	5%	1/6W	
R683	1-247-847-00	CARBON	4.7K	5%	1/6W	
R684	1-249-437-11	CARBON	47K	5%	1/6W	
R685	1-249-437-11	CARBON	47K	5%	1/6W	
R686	1-249-437-11	CARBON	47K	5%	1/6W	

VARIABLE RESISTOR

RV001	1-228-991-00	RES, ADJ, CARBON	2.2K
RV002	1-228-994-00	RES, ADJ, CARBON	10K
RV003	1-228-993-00	RES, ADJ, CARBON	4.7K
RV005	1-228-993-00	RES, ADJ, CARBON	4.7K
RV006	1-228-993-00	RES, ADJ, CARBON	4.7K
RV007	1-228-993-00	RES, ADJ, CARBON	4.7K
RV008	1-228-990-00	RES, ADJ, CARBON	1K
RV009	1-228-921-00	RES, ADJ, CARBON	4.7K
RV010	1-228-994-00	RES, ADJ, CARBON	10K
RV011	1-228-991-00	RES, ADJ, CARBON	2.2K
RV012	1-228-990-00	RES, ADJ, CARBON	1K
RV013	1-228-993-00	RES, ADJ, CARBON	4.7K
RV014	1-228-993-00	RES, ADJ, CARBON	4.7K
RV601	1-230-496-11	RES, ADJ, METAL GLAZE	10K
RV602	1-228-921-00	RES, ADJ, CARBON	4.7K
RV603	1-228-921-00	RES, ADJ, CARBON	4.7K
RV604	1-228-995-00	RES, ADJ, METAL GLAZE	22K
RV605	1-228-995-00	RES, ADJ, METAL GLAZE	22K

TRANSFORMER

T001	1-427-546-11	TRANSFORMER, I/O
T002	1-427-546-11	TRANSFORMER, I/O

THERMISTOR

TH001	1-800-202-XX	THERMISTOR S-10K
TH002	1-800-198-XX	THERMISTOR S-1K

****

*A-6715-272-A	SS-50 BOARD, COMPLETE	
	**********	
*3-681-170-00	HEAT SINK, S	
7-621-770-87	SCREW +B 2.6X5	

CAPACITOR

C101	1-161-023-00	CERAMIC	0.068MF	10%	25V
C102	1-102-816-00	CERAMIC	120PF	10%	50V
C103	1-102-513-00	CERAMIC	18PF	5%	50V
C104	1-102-513-00	CERAMIC	18PF	5%	50V
C105	1-161-023-00	CERAMIC	0.068MF	10%	25V
C106	1-102-529-00	CERAMIC	100PF	5%	50V
C107	1-102-529-00	CERAMIC	100PF	5%	50V
C108	1-161-023-00	CERAMIC	0.068MF	10%	25V
C109	1-161-023-00	CERAMIC	0.068MF	10%	25V
C110	1-161-025-00	CERAMIC	0.1MF	10%	25V
C111	1-161-025-00	CERAMIC	0.1MF	10%	25V
C112	1-130-499-00	MYLAR	0.22MF	5%	50V
C113	1-123-380-00	ELECT	1MF	20%	50V
C114	1-123-343-00	ELECT	33MF	20%	25V

The components identified by shading and mark ⚠ are critical for safety. Replace only with part number specified.

When indicating parts by reference number, please include the board name.

SS-50

Ref.No	Part No.	Description			Remark
C115	1-102-518-00	CERAMIC	33PF	5%	50V
C116	1-102-518-00	CERAMIC	33PF	5%	50V
C119	1-161-059-00	CERAMIC	0.047MF	10%	25V
C120	1-161-059-00	CERAMIC	0.047MF	10%	25V
C121	1-161-013-00	CERAMIC	0.01MF	10%	25V
C122	1-123-318-00	ELECT	33MF	20%	16V
C301	1-131-344-00	TANTALUM	0.33MF	10%	35V
C302	1-130-491-00	MYLAR	0.047MF	5%	50V
C303	1-130-491-00	MYLAR	0.047MF	5%	50V
C304	1-161-059-00	CERAMIC	0.047MF	10%	25V
C305	1-123-321-00	ELECT	220MF	20%	16V
C306	1-130-491-00	MYLAR	0.047MF	5%	50V
C307	1-130-491-00	MYLAR	0.047MF	5%	50V
C308	1-161-013-00	CERAMIC	0.01MF	10%	25V
C309	1-161-013-00	CERAMIC	0.01MF	10%	25V
C310	1-123-356-00	ELECT	10MF	20%	16V
C311	1-130-483-00	MYLAR	0.01MF	5%	50V
C312	1-130-491-00	MYLAR	0.047MF	5%	50V
C313	1-130-491-00	MYLAR	0.047MF	5%	50V
C314	1-130-491-00	MYLAR	0.047MF	5%	50V
C315	1-130-491-00	MYLAR	0.047MF	5%	50V
C316	1-130-491-00	MYLAR	0.047MF	5%	50V
C317	1-161-045-00	CERAMIC	0.0033MF	10%	25V
C318	1-161-039-00	CERAMIC	0.001MF	10%	25V
C320	1-123-380-00	ELECT	1MF	20%	50V
C321	1-161-039-00	CERAMIC	0.001MF	10%	25V
C323	1-123-332-00	ELECT	47MF	20%	16V
C324	1-161-059-00	CERAMIC	0.047MF	10%	25V
C325	1-123-356-00	ELECT	10MF	20%	16V
C328	1-123-381-00	ELECT	2.2MF	20%	50V
C329	1-123-381-00	ELECT	2.2MF	20%	50V
C330	1-123-381-00	ELECT	2.2MF	20%	50V
C332	1-123-356-00	ELECT	10MF	20%	16V
C333	1-123-356-00	ELECT	10MF	20%	16V
C334	1-123-381-00	ELECT	2.2MF	20%	50V
C335	1-161-039-00	CERAMIC	0.001MF	10%	25V
C336	1-123-332-00	ELECT	47MF	20%	16V
C337	1-161-059-00	CERAMIC	0.047MF	10%	25V
C338	1-161-045-00	CERAMIC	0.0033MF	10%	25V
C339	1-130-493-00	MYLAR	0.068MF	5%	50V
C340	1-123-332-00	ELECT	47MF	20%	16V
C341	1-102-973-00	CERAMIC	100PF	5%	50V
C342	1-123-369-00	ELECT	4.7MF	20%	25V
C343	1-123-381-00	ELECT	2.2MF	20%	50V
C344	1-123-379-00	ELECT	0.47MF	20%	50V
C345	1-130-483-00	MYLAR	0.01MF	5%	50V
C346	1-123-369-00	ELECT	4.7MF	20%	25V
C347	1-123-369-00	ELECT	4.7MF	20%	25V
C349	1-161-059-00	CERAMIC	0.047MF	10%	25V
C350	1-123-333-00	ELECT	100MF	20%	16V
C351	1-130-491-00	MYLAR	0.047MF	5%	50V
C352	1-130-483-00	MYLAR	0.01MF	5%	50V
C353	1-123-321-00	ELECT	220MF	20%	16V

Ref.No	Part No.	Description			Remark
C354	1-161-053-00	CERAMIC	0.015MF	10%	25V
C355	1-161-043-00	CERAMIC	0.0022MF	10%	25V
C356	1-161-059-00	CERAMIC	0.047MF	10%	25V
C357	1-161-025-00	CERAMIC	0.1MF	10%	25V
C358	1-161-059-00	CERAMIC	0.047MF	10%	25V
C359	1-123-356-00	ELECT	10MF	20%	16V
C360	1-161-059-00	CERAMIC	0.047MF	10%	25V
C361	1-123-356-00	ELECT	10MF	20%	16V
C362	1-123-380-00	ELECT	1MF	20%	50V
C370	1-123-381-00	ELECT	2.2MF	20%	50V
C371	1-123-307-00	ELECT	100MF	20%	10V
C372	1-123-332-00	ELECT	47MF	20%	16V
C373	1-123-356-00	ELECT	10MF	20%	16V
C374	1-161-025-00	CERAMIC	0.1MF	10%	25V
C375	1-123-356-00	ELECT	10MF	20%	16V
C379	1-102-978-00	CERAMIC	220PF	5%	50V
C501	1-161-013-00	CERAMIC	0.01MF	10%	25V
C502	1-161-013-00	CERAMIC	0.01MF	10%	25V
C503	1-161-059-00	CERAMIC	0.047MF	10%	25V
C504	1-123-356-00	ELECT	10MF	20%	16V
C505	1-161-013-00	CERAMIC	0.01MF	10%	25V
C506	1-123-356-00	ELECT	10MF	20%	16V
C507	1-161-059-00	CERAMIC	0.047MF	10%	25V
C508	1-123-380-00	ELECT	1MF	20%	50V
C609	1-123-307-00	ELECT	100MF	20%	10V
C610	1-123-380-00	ELECT	1MF	20%	50V
C611	1-123-307-00	ELECT	100MF	20%	10V

CONNECTOR

CN101	*1-560-900-00	PIN, CONNECTOR 12P
CN102	*1-560-900-00	PIN, CONNECTOR 12P
CN103	*1-560-893-00	PIN, CONNECTOR 5P
CN104	*1-560-898-00	PIN, CONNECTOR 10P
CN105	*1-564-011-11	PIN, CONNECTOR 12P
CN106	*1-560-891-00	PIN, CONNECTOR 3P
CN107	*1-560-891-00	PIN, CONNECTOR 3P
CN108	*1-564-007-00	PIN, CONNECTOR 8P
CN109	*1-560-890-00	PIN, CONNECTOR 2P
CN110	1-562-732-11	SOCKET 5P
CN111	*1-560-896-00	PIN, CONNECTOR 8P
CN112	1-507-678-21	JACK
CN113	*1-564-003-00	PIN, CONNECTOR 4P
CN114	*1-560-892-00	PIN, CONNECTOR 4P
CN301	*1-560-896-00	PIN, CONNECTOR 8P
CN302	*1-560-894-00	PIN, CONNECTOR 6P
CN303	*1-560-892-00	PIN, CONNECTOR 4P
CN304	*1-560-896-00	PIN, CONNECTOR 8P
CN305	*1-560-892-00	PIN, CONNECTOR 4P
CN306	*1-560-890-00	PIN, CONNECTOR 2P
CN307	*1-560-891-00	PIN, CONNECTOR 3P
CN308	*1-560-891-00	PIN, CONNECTOR 3P
CN309	*1-560-890-00	PIN, CONNECTOR 2P

When indicating parts by reference number, please include the board name.

Ref.No	Part No.	Description	Remark
		DIODE	
D101	8-719-200-02	DIODE 10E-2	
D102	8-719-000-04	DIODE MC911	
D104	8-719-100-71	DIODE RD15E-B2	
D105	8-719-100-71	DIODE RD15E-B2	
D107	8-719-000-06	DIODE MC921	
D110	8-719-911-19	DIODE 1SS119	
D111	8-719-200-23	DIODE 11E2	
D112	8-719-911-19	DIODE 1SS119	
D301	8-719-911-19	DIODE 1SS119	
D302	8-719-911-19	DIODE 1SS119	
D303	8-719-911-19	DIODE 1SS119	
D304	8-719-000-06	DIODE MC921	
D305	8-719-000-06	DIODE MC921	
D306	8-719-000-06	DIODE MC921	
D307	8-719-000-06	DIODE MC921	
D308	8-719-911-19	DIODE 1SS119	
D309	8-719-000-06	DIODE MC921	
D310	8-719-000-06	DIODE MC921	
D311	8-719-911-19	DIODE 1SS119	
D312	8-719-200-02	DIODE 10E-2	
D313	8-719-191-07	DIODE RD9.1E-B	
D314	8-719-101-34	DIODE RD3.0EL1	
D315	8-719-911-19	DIODE 1SS119	
D316	8-719-911-19	DIODE 1SS119	
D317	8-719-911-19	DIODE 1SS119	
D318	8-719-911-19	DIODE 1SS119	
D320	8-719-000-06	DIODE MC921	
D322	8-719-911-19	DIODE 1SS119	
D610	8-719-911-19	DIODE 1SS119	
		IC	
IC101	8-759-921-44	IC MB88551-173M	
IC102	8-759-602-75	IC M50761-696P	
IC103	8-759-105-55	IC UPD7508HG-537-22	
IC104	8-759-921-02	IC MB89005-104	
IC105	8-759-920-94	IC MSM6411B-19RS	
IC106	8-759-240-53	IC TC4053BP	
IC108	8-759-801-60	IC LB1640N	
IC109	8-759-801-60	IC LB1640N	
IC110	8-759-135-80	IC UPC358C	
IC301	8-752-012-40	IC CX20124	
IC302	8-752-006-90	IC CX20069	
IC304	8-759-240-51	IC TC4051BP	
IC305	8-759-100-06	IC UPC4556C	
IC306	8-759-240-13	IC TC4013BP	
IC307	8-759-135-80	IC UPC358C	
IC308	8-759-132-40	IC UPC324C	
IC309	8-759-240-66	IC TC4066BP	
IC310	8-759-240-53	IC TC4053BP	
IC501	8-759-918-61	IC MB88201-191G	
IC602	8-759-240-53	IC TC4053BP	

Ref.No	Part No.	Description	Remark
		COIL	
L101	1-408-412-00	MICRO INDUCTOR 18UH	
L501	1-408-421-00	MICRO INDUCTOR 100UH	
L502	1-408-417-00	MICRO INDUCTOR 47UH	
		IC LINK	
PS101	⚠1-532-637-11	LINK, IC	
PS301	⚠1-532-727-11	LINK, IC	
PS302	⚠1-532-727-11	LINK, IC	
PS303	⚠1-532-727-11	LINK, IC	
		TRANSISTOR	
Q101	8-729-900-89	TRANSISTOR DTC144ES	
Q102	8-729-900-65	TRANSISTOR DTA144ES	
Q103	8-729-900-89	TRANSISTOR DTC144ES	
Q104	8-729-900-89	TRANSISTOR DTC144ES	
Q105	8-729-900-89	TRANSISTOR DTC144ES	
Q106	8-729-204-83	TRANSISTOR 2SA1048	
Q109	8-729-900-89	TRANSISTOR DTC144ES	
Q111	8-729-900-89	TRANSISTOR DTC144ES	
Q112	8-729-900-89	TRANSISTOR DTC144ES	
Q113	8-729-245-83	TRANSISTOR 2SC2458	
Q114	8-729-245-83	TRANSISTOR 2SC2458	
Q115	8-729-245-83	TRANSISTOR 2SC2458	
Q116	8-729-245-83	TRANSISTOR 2SC2458	
Q117	8-729-204-83	TRANSISTOR 2SA1048	
Q118	8-729-113-32	TRANSISTOR 2SB733-3	
Q119	8-729-204-83	TRANSISTOR 2SA1048	
Q301	8-729-900-89	TRANSISTOR DTC144ES	
Q302	8-729-900-89	TRANSISTOR DTC144ES	
Q303	8-729-900-89	TRANSISTOR DTC144ES	
Q304	8-729-900-89	TRANSISTOR DTC144ES	
Q305	8-729-245-83	TRANSISTOR 2SC2458	
Q306	8-729-245-83	TRANSISTOR 2SC2458	
Q307	8-729-204-83	TRANSISTOR 2SA1048	
Q308	8-729-245-83	TRANSISTOR 2SC2458	
Q309	8-729-177-32	TRANSISTOR 2SD773-3	
Q310	8-729-900-89	TRANSISTOR DTC144ES	
Q311	8-729-900-89	TRANSISTOR DTC144ES	
Q312	8-729-245-83	TRANSISTOR 2SC2458	
Q313	8-729-204-83	TRANSISTOR 2SA1048	
Q314	8-729-900-89	TRANSISTOR DTC144ES	
Q315	8-729-831-33	TRANSISTOR 2SD313HP	
Q316	8-729-247-33	TRANSISTOR 2SA473	
Q317	8-729-900-65	TRANSISTOR DTA144ES	
Q318	8-729-900-89	TRANSISTOR DTC144ES	
Q319	8-729-900-89	TRANSISTOR DTC144ES	
Q320	8-729-245-83	TRANSISTOR 2SC2458	
Q321	8-729-245-83	TRANSISTOR 2SC2458	
Q322	8-729-245-83	TRANSISTOR 2SC2458	
Q323	8-729-900-89	TRANSISTOR DTC144ES	
Q324	8-729-245-83	TRANSISTOR 2SC2458	

The components identified by shading and mark ⚠ are critical for safety. Replace only with part number specified.

When indicating parts by reference number, please include the board name.

SS-50

Ref.No	Part No.	Description	Remark
Q325	8-729-831-33	TRANSISTOR 2SD313HP	
Q326	8-729-900-89	TRANSISTOR DTC144ES	
Q327	8-729-900-89	TRANSISTOR DTC144ES	
Q328	8-729-245-83	TRANSISTOR 2SC2458	
Q329	8-729 204-83	TRANSISTOR 2SA1048	
Q330	8-729-245-83	TRANSISTOR 2SC2458	
Q331	8-729-900-89	TRANSISTOR DTC144ES	
Q333	8-729-204-83	TRANSISTOR 2SA1048	
Q334	8-729-245-83	TRANSISTOR 2SC2458	
Q335	8-729-900-89	TRANSISTOR DTC144ES	
Q336	8-729-245-83	TRANSISTOR 2SC2458	
Q337	8-729-900-89	TRANSISTOR DTC144ES	
Q338	8-729-177-32	TRANSISTOR 2SD773	
Q339	8-729-900-89	TRANSISTOR DTC144ES	
Q340	8-729-900-89	TRANSISTOR DTC144ES	
Q341	8-729-900-89	TRANSISTOR DTC144ES	
Q342	8-729-204-83	TRANSISTOR 2SA1048	
Q343	8-729-900-89	TRANSISTOR DTC144ES	
Q344	8-729-900-89	TRANSISTOR DTC144ES	
Q345	8-729-113-32	TRANSISTOR 2SB733-3	
Q346	8-729-204-83	TRANSISTOR 2SA1048	
Q350	8-729-900-89	TRANSISTOR DTC144ES	
Q351	8-729-900-89	TRANSISTOR DTC144ES	
Q352	8-729-900-89	TRANSISTOR DTC144ES	
Q353	8-729-900-89	TRANSISTOR DTC144ES	
Q354	8-729-900-89	TRANSISTOR DTC144ES	
Q355	8-729-900-89	TRANSISTOR DTC144ES	
Q356	8-729-204-83	TRANSISTOR 2SA1048	
Q357	8-729-204-83	TRANSISTOR 2SA1048	
Q358	8-729-245-83	TRANSISTOR 2SC2458	
Q359	8-729-245-83	TRANSISTOR 2SC2458	
Q360	8-729-900-65	TRANSISTOR DTA144ES	
Q361	8-729-900-89	TRANSISTOR DTC144ES	
Q362	8-729-900-89	TRANSISTOR DTC144ES	
Q363	8-729-245-83	TRANSISTOR 2SC2458	
Q364	8-729-900-89	TRANSISTOR DTC144ES	
Q365	8-729-900-89	TRANSISTOR DTC144ES	
Q366	8-729-178-54	TRANSISTOR 2SC2785	
Q501	8-729-245-83	TRANSISTOR 2SC2458	
Q612	8-729-900-89	TRANSISTOR DTC144ES	
Q613	8-729-900-89	TRANSISTOR DTC144ES	
Q614	8-729-900-89	TRANSISTOR DTC144ES	

RESISTOR

Ref.No	Part No.	Description			Remark
R105	1-249-429-11	CARBON	10K	5% 1/6W	
R106	1-249-429-11	CARBON	10K	5% 1/6W	
R107	1-249-429-11	CARBON	10K	5% 1/6W	
R108	1-249-429-11	CARBON	10K	5% 1/6W	
R110	1-247-843-00	CARBON	3.3K	5% 1/6W	
R111	1-247-903-00	CARBON	1M	5% 1/6W	
R113	1-247-879-00	CARBON	100K	5% 1/6W	
R114	1-247-843-00	CARBON	3.3K	5% 1/6W	
R115	1-247-843-00	CARBON	3.3K	5% 1/6W	
R116	1-247-843-00	CARBON	3.3K	5% 1/6W	
R117	1-247-843-00	CARBON	3.3K	5% 1/6W	
R119	1-249-429-11	CARBON	10K	5% 1/6W	
R120	1-249-429-11	CARBON	10K	5% 1/6W	
R121	1-249-429-11	CARBON	10K	5% 1/6W	
R122	1-249-429-11	CARBON	10K	5% 1/6W	
R123	1-249-429-11	CARBON	10K	5% 1/6W	
R127	1-247-887-00	CARBON	220K	5% 1/6W	
R128	1-247-901-00	CARBON	820K	5% 1/6W	
R129	1-249-429-11	CARBON	10K	5% 1/6W	
R130	1-247-821-00	CARBON	390	5% 1/6W	
R131	1-247-897-00	CARBON	560K	5% 1/6W	
R132	1-249-429-11	CARBON	10K	5% 1/6W	
R133	1-249-434-11	CARBON	27K	5% 1/6W	
R134	1-249-434-11	CARBON	27K	5% 1/6W	
R135	1-249-429-11	CARBON	10K	5% 1/6W	
R136	1-249-429-11	CARBON	10K	5% 1/6W	
R137	1-249-421-11	CARBON	2.2K	5% 1/6W	
R138	1-249-429-11	CARBON	10K	5% 1/6W	
R139	1-249-421-11	CARBON	2.2K	5% 1/6W	
R141	1-247-819-00	CARBON	330	5% 1/6W	
R142	1-247-843-00	CARBON	3.3K	5% 1/6W	
R143 ⚠	1-247-831-91	CARBON	1K	5% 1/6W	
R146	1-247-831-00	CARBON	1K	5% 1/6W	
R147	1-247-831-00	CARBON	1K	5% 1/6W	
R148	1-247-831-00	CARBON	1K	5% 1/6W	
R149	1-247-787-00	CARBON	15	5% 1/6W	
R150	1-247-851-00	CARBON	6.8K	5% 1/6W	
R151	1-247-851-00	CARBON	6.8K	5% 1/6W	
R302	1-247-867-00	CARBON	33K	5% 1/6W	
R304	1-247-883-00	CARBON	150K	5% 1/6W	
R305	1-249-429-11	CARBON	10K	5% 1/6W	
R306	1-247-869-00	CARBON	39K	5% 1/6W	
R307	1-247-877-00	CARBON	82K	5% 1/6W	
R308	1-247-877-00	CARBON	82K	5% 1/6W	
R309	1-247-885-00	CARBON	180K	5% 1/6W	
R311	1-247-883-00	CARBON	150K	5% 1/6W	
R312	1-249-429-11	CARBON	10K	5% 1/6W	
R313	1-247-841-00	CARBON	2.7K	5% 1/6W	
R314	1-215-467-00	METAL	82K	1% 1/6W	
R315	1-215-400-91	METAL	130	1% 1/6W	
R316	1-215-400-91	METAL	130	1% 1/6W	
R317	1-215-420-00	METAL	910	1% 1/6W	
R318	1-215-433-00	METAL	3.3K	1% 1/6W	
R319	1-249-437-11	CARBON	47K	5% 1/6W	
R320	1-249-421-11	CARBON	2.2K	5% 1/6W	
R321	1-249-429-11	CARBON	10K	5% 1/6W	
R322	1-247-859-00	CARBON	15K	5% 1/6W	
R323	1-249-437-11	CARBON	47K	5% 1/6W	
R324	1-249-437-11	CARBON	47K	5% 1/6W	
R325	1-247-879-00	CARBON	100K	5% 1/6W	
R326	1-247-863-00	CARBON	22K	5% 1/6W	
R329	1-215-485-00	METAL	470K	1% 1/6W	

The components identified by shading and mark ⚠ are critical for safety. Replace only with part number specified.

When indicating parts by reference number, please include the board name.

Ref.No	Part No.	Description				Remark
R330	1-215-485-00	METAL	470K	1%	1/6W	
R331	1-247-889-00	CARBON	270K	5%	1/6W	
R332	1-247-889-00	CARBON	270K	5%	1/6W	
R333	1-247-879-00	CARBON	100K	5%	1/6W	
R334	1-247-867-00	CARBON	33K	5%	1/6W	
R335	1-247-859-00	CARBON	15K	5%	1/6W	
R336	1-249-429-11	CARBON	10K	5%	1/6W	
R337	1-249-429-11	CARBON	10K	5%	1/6W	
R338	1-247-875-00	CARBON	68K	5%	1/6W	
R339	1-247-867-00	CARBON	33K	5%	1/6W	
R340	1-249-437-11	CARBON	47K	5%	1/6W	
R341	1-247-879-00	CARBON	100K	5%	1/6W	
R343	1-247-831-00	CARBON	1K	5%	1/6W	
R344	1-247-847-00	CARBON	4.7K	5%	1/6W	
R345	1-247-873-00	CARBON	56K	5%	1/6W	
R346	1-249-437-11	CARBON	47K	5%	1/6W	
R347	1-247-863-00	CARBON	22K	5%	1/6W	
R348	1-247-881-00	CARBON	120K	5%	1/6W	
R349	1-247-807-00	CARBON	100	5%	1/6W	
R350	1-247-903-00	CARBON	1M	5%	1/6W	
R351 ⚠	1-212-356-61	METAL OXIDE	0.47	5%	1W	F
R352	1-247-861-00	CARBON	18K	5%	1/6W	
R353	1-249-429-11	CARBON	10K	5%	1/6W	
R354	1-247-861-00	CARBON	18K	5%	1/6W	
R355	1-247-879-00	CARBON	100K	5%	1/6W	
R356	1-249-437-11	CARBON	47K	5%	1/6W	
R357	1-249-434-11	CARBON	27K	5%	1/6W	
R358	1-247-867-00	CARBON	33K	5%	1/6W	
R359	1-247-867-00	CARBON	33K	5%	1/6W	
R360	1-247-831-00	CARBON	1K	5%	1/6W	
R361	1-247-867-00	CARBON	33K	5%	1/6W	
R362	1-249-429-11	CARBON	10K	5%	1/6W	
R363	1-247-867-00	CARBON	33K	5%	1/6W	
R364	1-247-807-00	CARBON	100	5%	1/6W	
R365 ⚠	1-212-360-61	METAL OXIDE	1	5%	1W	F
R366	1-247-831-00	CARBON	1K	5%	1/6W	
R367 ⚠	1-212-368-61	METAL OXIDE	4.7	5%	1W	F
R368	1-247-833-00	CARBON	1.2K	5%	1/6W	
R369	1-247-833-00	CARBON	1.2K	5%	1/6W	
R370	1-247-847-00	CARBON	4.7K	5%	1/6W	
R371	1-247-847-00	CARBON	4.7K	5%	1/6W	
R372	1-247-831-00	CARBON	1K	5%	1/6W	
R373	1-249-429-11	CARBON	10K	5%	1/6W	
R374	1-247-859-00	CARBON	15K	5%	1/6W	
R375	1-247-879-00	CARBON	100K	5%	1/6W	
R376	1-247-895-00	CARBON	470K	5%	1/6W	
R377	1-249-437-11	CARBON	47K	5%	1/6W	
R378	1-249-437-11	CARBON	47K	5%	1/6W	
R379	1-249-429-11	CARBON	10K	5%	1/6W	
R380	1-249-437-11	CARBON	47K	5%	1/6W	
R381	1-247-863-00	CARBON	22K	5%	1/6W	
R382	1-247-895-00	CARBON	470K	5%	1/6W	
R383	1-247-867-00	CARBON	33K	5%	1/6W	

Ref.No	Part No.	Description				Remark
R384	1-247-837-00	CARBON	1.8K	5%	1/6W	
R385	1-247-869-00	CARBON	39K	5%	1/6W	
R388	1-247-891-00	CARBON	330K	5%	1/6W	
R389	1-247-903-00	CARBON	1M	5%	1/6W	
R390	1-247-831-00	CARBON	1K	5%	1/6W	
R391	1-249-419-11	CARBON	1.5K	5%	1/6W	
R392	1-249-429-11	CARBON	10K	5%	1/6W	
R393	1-247-859-00	CARBON	15K	5%	1/6W	
R394	1-247-879-00	CARBON	100K	5%	1/6W	
R395	1-247-883-00	CARBON	150K	5%	1/6W	
R396	1-247-859-00	CARBON	15K	5%	1/6W	
R397	1-247-867-00	CARBON	33K	5%	1/6W	
R398	1-247-867-00	CARBON	33K	5%	1/6W	
R399	1-247-850-00	CARBON	6.2K	5%	1/6W	
R400	1-247-903-00	CARBON	1M	5%	1/6W	
R401	1-247-879-00	CARBON	100K	5%	1/6W	
R402	1-247-889-00	CARBON	270K	5%	1/6W	
R403	1-247-895-00	CARBON	470K	5%	1/6W	
R404	1-249-437-11	CARBON	47K	5%	1/6W	
R405	1-247-861-00	CARBON	18K	5%	1/6W	
R406	1-247-859-00	CARBON	15K	5%	1/6W	
R407	1-247-831-00	CARBON	1K	5%	1/6W	
R408	1-247-863-00	CARBON	22K	5%	1/6W	
R409	1-247-863-00	CARBON	22K	5%	1/6W	
R410	1-247-867-00	CARBON	33K	5%	1/6W	
R413	1-249-437-11	CARBON	47K	5%	1/6W	
R415	1-249-437-11	CARBON	47K	5%	1/6W	
R417	1-247-857-00	CARBON	12K	5%	1/6W	
R418	1-247-859-00	CARBON	15K	5%	1/6W	
R419	1-249-421-11	CARBON	2.2K	5%	1/6W	
R420	1-249-437-11	CARBON	47K	5%	1/6W	
R421	1-247-843-00	CARBON	3.3K	5%	1/6W	
R422	1-249-429-11	CARBON	10K	5%	1/6W	
R424	1-249-419-11	CARBON	1.5K	5%	1/6W	
R425	1-249-437-11	CARBON	47K	5%	1/6W	
R426	1-249-437-11	CARBON	47K	5%	1/6W	
R427	1-247-859-00	CARBON	15K	5%	1/6W	
R428	1-249-434-11	CARBON	27K	5%	1/6W	
R429	1-249-429-11	CARBON	10K	5%	1/6W	
R430	1-247-831-00	CARBON	1K	5%	1/6W	
R431	1-249-429-11	CARBON	10K	5%	1/6W	
R440	1-247-877-00	CARBON	82K	5%	1/6W	
R442	1-249-437-11	CARBON	47K	5%	1/6W	
R443	1-249-437-11	CARBON	47K	5%	1/6W	
R448 ⚠	1-247-815-91	CARBON	220	5%	1/6W	
R449	1-247-851-00	CARBON	6.8K	5%	1/6W	
R450	1-249-437-11	CARBON	47K	5%	1/6W	
R451	1-249-429-11	CARBON	10K	5%	1/6W	
R452	1-249-437-11	CARBON	47K	5%	1/6W	
R453	1-247-867-00	CARBON	33K	5%	1/6W	
R454	1-249-437-11	CARBON	47K	5%	1/6W	
R455	1-249-437-11	CARBON	47K	5%	1/6W	
R456	1-247-879-00	CARBON	100K	5%	1/6W	

The components identified by shading and mark ⚠ are critical for safety. Replace only with part number specified.

When indicating parts by reference number, please include the board name.

SS-50 QV-1

Ref.No	Part No.	Description				Remark
R457	1-249-437-11	CARBON	47K	5%	1/6W	
R458	1-249-429-11	CARBON	10K	5%	1/6W	
R459	1-249-421-11	CARBON	2.2K	5%	1/6W	
R460	1-247-859-00	CARBON	15K	5%	1/6W	
R461	1-247-863-00	CARBON	22K	5%	1/6W	
R462	1-247-891-00	CARBON	330K	5%	1/6W	
R464	1-249-437-11	CARBON	47K	5%	1/6W	
R465	1-249-437-11	CARBON	47K	5%	1/6W	
R466	1-247-837-00	CARBON	1.8K	5%	1/6W	
R467	1-247-831-00	CARBON	1K	5%	1/6W	
R468	1-249-419-11	CARBON	1.5K	5%	1/6W	
R470	1-247-843-00	CARBON	3.3K	5%	1/6W	
R471	1-247-883-00	CARBON	150K	5%	1/6W	
R472	1-247-903-00	CARBON	1M	5%	1/6W	
R473	1-247-903-00	CARBON	1M	5%	1/6W	
R474	1-247-849-00	CARBON	5.6K	5%	1/6W	
R480	1-249-429-11	CARBON	10K	5%	1/6W	
R481	1-247-879-00	CARBON	100K	5%	1/6W	
R482	1-247-862-00	CARBON	20K	5%	1/6W	
R483	1-247-859-00	CARBON	15K	5%	1/6W	
R486	1-249-437-11	CARBON	47K	5%	1/6W	
R487	1-249-437-11	CARBON	47K	5%	1/6W	
R488	1-247-871-00	CARBON	47K	5%	1/6W	
R492	1-249-437-11	CARBON	47K	5%	1/6W	
R501	1-249-437-11	CARBON	47K	5%	1/6W	
R502	1-247-859-00	CARBON	15K	5%	1/6W	
R503	1-249-421-11	CARBON	2.2K	5%	1/6W	
R504	1-247-803-00	CARBON	68	5%	1/6W	
R505	1-247-831-00	CARBON	1K	5%	1/6W	
R506	1-249-429-11	CARBON	10K	5%	1/6W	
R507	1-249-429-11	CARBON	10K	5%	1/6W	
R508	1-247-879-00	CARBON	100K	5%	1/6W	
R509	1-247-879-00	CARBON	100K	5%	1/6W	
R510	1-247-843-00	CARBON	3.3K	5%	1/6W	
R511	1-249-429-11	CARBON	10K	5%	1/6W	
R512	1-249-429-11	CARBON	10K	5%	1/6W	
R513	1-249-429-11	CARBON	10K	5%	1/6W	
R623	1-249-421-11	CARBON	2.2K	5%	1/6W	
R624	1-249-437-11	CARBON	47K	5%	1/6W	
R625	1-249-437-11	CARBON	47K	5%	1/6W	
R626	1-249-437-11	CARBON	47K	5%	1/6W	
R631	1-249-437-11	CARBON	47K	5%	1/6W	

VARIABLE RESISTOR

RV101	1-228-991-00	RES, ADJ, CARBON	2.2K
RV102	1-228-270-00	RES, VAR, CARBON	10K
RV103	1-228-994-00	RES, ADJ, CARBON	10K
RV301	1-228-750-00	RES, ADJ, CARBON	47K
RV302	1-228-995-00	RES, ADJ, CARBON	22K
RV303	1-228-997-00	RES, ADJ, CARBON	100K
RV304	1-228-997-00	RES, ADJ, CARBON	100K
RV305	1-228-997-00	RES, ADJ, METAL GLAZE	100K
RV306	1-228-996-00	RES, ADJ, METAL GLAZE	47K

Ref.No	Part No.	Description	Remark
RV307	1-228-992-11	RES, ADJ, METAL GLAZE 3.3K	
RV308	1-228-997-00	RES, ADJ, METAL GLAZE 100K	
RV315	1-228-994-00	RES, ADJ, CARBON 10K	
RV316	1-228-994-00	RES, ADJ, CARBON 10K	
RV317	1-228-753-00	RES, ADJ, CARBON 470K	
RV601	1-228-993-00	RES, ADJ, CARBON 4.7K	
RV602	1-228-993-00	RES, ADJ, CARBON 4.7K	
RV603	1-228-993-00	RES, ADJ, CARBON 4.7K	
RV604	1-228-993-00	RES, ADJ, CARBON 4.7K	

CRYSTAL

X101	1-527-726-00	VIBRATOR, CRYSTAL (4MHz)
X102	1-527-965-00	OSCILLATOR, CERAMIC (800KHz)
X103	1-527-822-00	OSCILLATOR, CERAMIC (4MHz)

****

*1-617-383-11 QV-1 BOARD
****

CAPACITOR

C200	1-123-617-00	ELECT	10MF	20%	16V

DIODE

D200	8-719-000-06	DIODE MC921
D201	8-719-000-04	DIODE MC911
D202	8-719-000-04	DIODE MC911
D203	8-719-000-06	DIODE MC921
D204	8-719-000-04	DIODE MC911
D205	8-719-000-06	DIODE MC921
D206	8-719-911-19	DIODE 1SS119

TRANSISTOR

Q200	8-729-900-89	TRANSISTOR DTC144ES
Q201	8-729-900-89	TRANSISTOR DTC144ES
Q202	8-729-900-89	TRANSISTOR DTC144ES
Q203	8-729-900-89	TRANSISTOR DTC144ES
Q204	8-729-178-54	TRANSISTOR 2SC2785

RESISTOR

R200	1-247-843-00	CARBON	3.3K	5%	1/6W
R201	1-247-843-00	CARBON	3.3K	5%	1/6W
R202	1-249-429-11	CARBON	10K	5%	1/6W
R203	1-247-843-00	CARBON	3.3K	5%	1/6W
R204	1-247-857-00	CARBON	12K	5%	1/6W
R205	1-247-859-00	CARBON	15K	5%	1/6W
R206	1-249-419-11	CARBON	1.5K	5%	1/6W
R207	1-249-429-11	CARBON	10K	5%	1/6W
R208	1-249-429-11	CARBON	10K	5%	1/6W
R209	1-247-879-00	CARBON	100K	5%	1/6W
R210	1-247-897-00	CARBON	560K	5%	1/6W

****

When indicating parts by reference number, please include the board name.

Ref.No	Part No.	Description			Remark
	*A-6717-408-A	DR-33 BOARD, COMPLETE			
		**********			
		CAPACITOR			
C001	1-123-381-00	ELECT	2.2MF	20%	50V
C002	1-123-381-00	ELECT	2.2MF	20%	50V
C005	1-161-059-00	CERAMIC	0.047MF	10%	25V
C006	1-129-794-00	FILM	0.0033MF	5%	100V
C007	1-129-794-00	FILM	0.0033MF	5%	100V
C008	1-161-059-00	CERAMIC	0.047MF	10%	25V
C009	1-161-059-00	CERAMIC	0.047MF	10%	25V
C010	1-123-330-00	ELECT	22MF	20%	16V
C011	1-102-973-00	CERAMIC	100PF	5%	50V
C012	1-161-059-00	CERAMIC	0.047MF	10%	25V
		CONNECTOR			
CN001	*1-564-010-11	PIN, CONNECTOR 11P			
CN002	*1-560-892-00	PIN, CONNECTOR 4P			
CN003	*1-560-891-00	PIN, CONNECTOR 3P			
CN004	*1-564-009-00	PIN, CONNECTOR 10P			
CN005	*1-560-892-00	PIN, CONNECTOR 4P			
CN006	*1-560-890-00	PIN, CONNECTOR 2P			
CN007	*1-560-891-00	PIN, CONNECTOR 3P			
CN008	*1-560-890-00	PIN, CONNECTOR 2P			
CN010	*1-560-468-00	PIN, CONNECTOR 5P			
CN011	*1-560-466-00	PIN, CONNECTOR 3P			
CN012	*1-560-891-00	PIN, CONNECTOR 3P			
CN013	*1-564-005-00	PIN, CONNECTOR 6P			
CN014	*1-564-005-00	PIN, CONNECTOR 6P			
CN015	*1-564-003-00	PIN, CONNECTOR 4P			
CN017	*1-560-900-00	PIN, CONNECTOR 12P			
CN018	*1-564-011-11	PIN, CONNECTOR 12P			
CN019	*1-564-011-11	PIN, CONNECTOR 12P			
CN020	*1-564-010-41	PIN, CONNECTOR 11P			
		IC			
IC002	8-759-800-72	IC LA7205			
		RESISTOR			
R001	1-247-831-00	CARBON	1K	5%	1/6W
R002	1-247-815-00	CARBON	220	5%	1/6W
R003	1-247-831-00	CARBON	1K	5%	1/6W
R004	1-247-815-00	CARBON	220	5%	1/6W
R019	1-247-861-00	CARBON	18K	5%	1/6W
R020	1-247-862-00	CARBON	20K	5%	1/6W
R021	1-247-873-00	CARBON	56K	5%	1/6W
**********					
	*A-6721-248-A	TA-36 BOARD, COMPLETE (ES MODEL)			
		**********			
	*3-662-227-00	HOLDER (R-3), LED			
	*3-674-390-00	HOLDER (B), LED			

Ref.No	Part No.	Description			Remark
		STORAGE BATTERY			
B701	1-528-175-11	BATTERY, STORAGE			
		CAPACITOR			
C001	1-102-529-00	CERAMIC	100PF	5%	50V
C002	1-102-529-00	CERAMIC	100PF	5%	50V
C003	1-102-947-00	CERAMIC	10PF	5%	50V
C004	1-102-523-00	CERAMIC	56PF	5%	50V
C005	1-102-125-00	CERAMIC	0.0047MF	10%	50V
C006	1-102-125-00	CERAMIC	0.0047MF	10%	50V
C007	1-102-125-00	CERAMIC	0.0047MF	10%	50V
C008	1-102-125-00	CERAMIC	0.0047MF	10%	50V
C009	1-102-125-00	CERAMIC	0.0047MF	10%	50V
C010	1-102-125-00	CERAMIC	0.0047MF	10%	50V
C011	1-102-125-00	CERAMIC	0.0047MF	10%	50V
C012	1-102-125-00	CERAMIC	0.0047MF	10%	50V
C013	1-123-369-00	ELECT	4.7MF	20%	25V
C014	1-102-125-00	CERAMIC	0.0047MF	10%	50V
C015	1-161-059-00	CERAMIC	0.047MF	10%	25V
C016	1-102-529-00	CERAMIC	100PF	5%	50V
C017	1-102-963-00	CERAMIC	33PF	5%	50V
C018	1-102-504-00	CERAMIC	4PF	0.25PF	50V
C019	1-102-529-00	CERAMIC	100PF	5%	50V
C020	1-102-504-00	CERAMIC	4PF	0.25PF	50V
C021	1-102-963-00	CERAMIC	33PF	5%	50V
C022	1-123-333-00	ELECT	100MF	20%	16V
C023	1-161-013-00	CERAMIC	0.01MF	10%	25V
C024	1-102-125-00	CERAMIC	0.0047MF	10%	50V
C025	1-123-379-00	ELECT	0.47MF	20%	50V
C026	1-101-361-00	CERAMIC	150PF	5%	50V
C027	1-102-125-00	CERAMIC	0.0047MF	10%	50V
C028	1-123-286-00	ELECT	0.33MF	20%	50V
C029	1-161-013-00	CERAMIC	0.01MF	10%	25V
C030	1-101-361-00	CERAMIC	150PF	5%	50V
C031	1-123-380-00	ELECT	1MF	20%	50V
C032	1-130-014-00	FILM	470PF	5%	50V
C033	1-102-525-00	CERAMIC	68PF	5%	50V
C034	1-161-055-00	CERAMIC	0.022MF	10%	25V
C035	1-161-055-00	CERAMIC	0.022MF	10%	25V
C036	1-161-055-00	CERAMIC	0.022MF	10%	25V
C037	1-123-332-00	ELECT	47MF	20%	16V
C038	1-130-478-00	MYLAR	0.0039MF	5%	50V
C039	1-130-478-00	MYLAR	0.0039MF	5%	50V
C040	1-130-478-00	MYLAR	0.0039MF	5%	50V
C041	1-123-380-00	ELECT	1MF	20%	50V
C042	1-123-380-00	ELECT	1MF	20%	50V
C043	1-123-332-00	ELECT	47MF	20%	16V
C044	1-123-356-00	ELECT	10MF	20%	16V
C045	1-123-356-00	ELECT	10MF	20%	16V
C046	1-161-059-00	CERAMIC	0.047MF	10%	25V
C047	1-123-333-00	ELECT	100MF	20%	16V
C048	1-123-308-00	ELECT	220MF	20%	10V

When indicating parts by reference number, please include the board name.

TA-36

Ref.No	Part No.	Description			Remark
C049	1-136-147-00	FILM	0.0033MF	5%	50V
C050	1-130-014-00	FILM	470PF	5%	50V
C051	1-161-055-00	CERAMIC	0.022MF	10%	25V
C052	1-161-059-00	CERAMIC	0.047MF	10%	25V
C053	1-136-244-11	FILM	0.1MF	2%	50V
C054	1-136-244-11	FILM	0.1MF	2%	50V
C055	1-123-330-00	ELECT	22MF	20%	16V
C056	1-136-243-11	FILM	0.047MF	2%	50V
C057	1-136-243-11	FILM	0.047MF	2%	50V
C058	1-123-333-00	ELECT	100MF	20%	16V
C059	1-123-333-00	ELECT	100MF	20%	16V
C060	1-123-356-00	ELECT	10MF	20%	16V
C061	1-161-013-00	CERAMIC	0.01MF	10%	25V
C062	1-123-356-00	ELECT	10MF	20%	16V
C063	1-102-125-00	CERAMIC	0.0047MF	10%	50V
C064	1-161-013-00	CERAMIC	0.01MF	10%	25V
C065	1-102-963-00	CERAMIC	33PF	5%	50V
C066	1-130-493-00	MYLAR	0.068MF	5%	50V
C067	1-130-493-00	MYLAR	0.068MF	5%	50V
C068	1-130-495-00	MYLAR	0.1MF	5%	50V
C069	1-102-973-00	CERAMIC	100PF	5%	50V
C070	1-123-380-00	ELECT	1MF	20%	50V
C072	1-161-013-00	CERAMIC	0.01MF	10%	25V
C073	1-161-047-00	CERAMIC	0.0047MF	20%	25V
C074	1-102-116-00	CERAMIC	680PF	10%	50V
C075	1-102-963-00	CERAMIC	33PF	5%	50V
C076	1-102-963-00	CERAMIC	33PF	5%	50V
C077	1-123-381-00	ELECT	2.2MF	20%	50V
C078	1-161-059-00	CERAMIC	0.047MF	10%	25V
C079	1-161-013-00	CERAMIC	0.01MF	10%	25V
C080	1-161-013-00	CERAMIC	0.01MF	10%	25V
C081	1-123-332-00	ELECT	47MF	20%	16V
C082	1-123-356-00	ELECT	10MF	20%	50V
C083	1-123-380-00	ELECT	1MF	20%	50V
C201	1-102-123-00	CERAMIC	0.0033MF	10%	50V
C301	1-123-356-00	ELECT	10MF	20%	50V
C501	1-123-356-00	ELECT	10MF	20%	16V
C502	1-123-381-00	ELECT	2.2MF	20%	50V
C503	1-123-332-00	ELECT	47MF	20%	16V
C504	2-203-074-91	CERAMIC	0.001MF		
C505	1-123-369-00	ELECT	4.7MF	20%	25V
C508	1-102-961-00	CERAMIC	27PF	5%	50V
C511	1-123-369-00	ELECT	4.7MF	20%	25V
C512	1-123-332-00	ELECT	47MF	20%	16V
C513	1-161-013-00	CERAMIC	0.01MF	10%	25V
C601	1-101-004-00	CERAMIC	0.01MF		50V
C602	1-101-004-00	CERAMIC	0.01MF		50V
C603	1-123-356-00	ELECT	10MF	20%	16V
C604	1-123-382-00	ELECT	3.3MF	20%	50V
C605	1-101-001-00	CERAMIC	0.001MF		50V
C606	1-101-004-00	CERAMIC	0.01MF		50V
C608	1-123-380-00	ELECT	1MF	20%	50V
C701	1-123-330-00	ELECT	22MF	20%	16V

Ref.No	Part No.	Description			Remark
C702	1-123-330-00	ELECT	22MF	20%	16V
C703	1-102-121-00	CERAMIC	0.0022MF	10%	50V
C704	1-123-381-00	ELECT	2.2MF	20%	50V
C705	1-123-330-00	ELECT	22MF	20%	16V
C706	1-123-308-00	ELECT	220MF	20%	10V
C800	1-101-004-00	CERAMIC	0.01MF		50V
C801	1-130-483-00	MYLAR	0.01MF	5%	50V
C802	1-136-164-00	MYLAR	0.082MF	5%	50V
C803	1-161-025-00	CERAMIC	0.1MF	10%	25V
C901	1-123-332-00	ELECT	47MF	20%	16V
C902	1-102-111-00	CERAMIC	270PF	10%	50V
C903	1-130-474-00	MYLAR	0.0018MF	5%	50V
C904	1-123-332-00	ELECT	47MF	20%	16V
C905	1-123-332-00	ELECT	47MF	20%	16V
C906	1-123-369-00	ELECT	4.7MF	20%	25V
C907	1-130-473-00	MYLAR	0.0015MF	5%	50V
C908	1-130-483-00	MYLAR	0.01MF	5%	50V
C909	1-123-332-00	ELECT	47MF	20%	16V
C910	1-123-332-00	ELECT	47MF	20%	16V
C911	1-130-471-00	MYLAR	0.001MF	5%	50V
C912	1-123-332-00	ELECT	47MF	20%	16V
C913	1-123-356-00	ELECT	10MF	20%	16V
C914	1-123-330-00	ELECT	22MF	20%	16V
C915	1-123-379-00	ELECT	0.47MF	20%	50V
C916	1-123-332-00	ELECT	47MF	20%	16V
C917	1-130-481-00	MYLAR	0.0068MF	5%	50V
C918	1-123-356-00	ELECT	10MF	20%	16V
C919	1-130-477-00	MYLAR	0.0033MF	5%	50V
C920	1-130-479-00	MYLAR	0.0047MF	5%	50V
C921	1-123-332-00	ELECT	47MF	20%	16V
C922	1-136-215-51	FILM	0.0068MF		400V
C923	1-107-080-00	MICA	62PF	5%	50V
C951	1-123-332-00	ELECT	47MF	20%	16V

FILTER

CF001	1-527-840-00	FILTER, CERAMIC
CF002	1-527-839-00	FILTER, CERAMIC
CF003	1-527-822-00	OSCILLATOR, CERAMIC

CONNECTOR

CN001	*1-560-891-00	PIN, CONNECTOR 3P
CN002	*1-560-896-00	PIN, CONNECTOR 8P
CN003	*1-560-894-00	PIN, CONNECTOR 6P
CN004	*1-560-900-00	PIN, CONNECTOR 12P
CN501	*1-560-892-00	PIN, CONNECTOR 4P
CN502	*1-560-896-00	PIN, CONNECTOR 8P
CN901	*1-564-030-00	PIN, CONNECTOR 5P
CN902	*1-564-033-00	PIN, CONNECTOR 8P

TRIMMER

CT001	1-404-134-00	TRAP, CERAMIC (5.5MHZ)

When indicating parts by reference number, please include the board name.

Ref.No	Part No.	Description	Remark
		DIODE	
D001	8-719-911-19	DIODE 1SS119	
D003	8-719-911-19	DIODE 1SS119	
D004	8-719-911-19	DIODE 1SS119	
D005	*8-719-812-33	DIODE TLG123A	
D006	8-719-812-32	DIODE TLY123	
D007	8-719-812-31	DIODE TLR123	
D008	8-719-000-12	DIODE MC931	
D009	8-719-812-31	DIODE TLR123	
D010	8-719-200-02	DIODE 10E-2	
D011	8-719-911-19	DIODE 1SS119	
D301	8-719-000-12	DIODE MC931	
D505	8-719-911-19	DIODE 1SS119	
D508	8-719-911-19	DIODE 1SS119	
D601	8-719-911-19	DIODE 1SS119	
D602	8-719-911-19	DIODE 1SS119	
D603	8-719-911-19	DIODE 1SS119	
D604	8-719-911-19	DIODE 1SS119	
D605	8-719-911-19	DIODE 1SS119	
D607	8-719-911-19	DIODE 1SS119	
D608	8-719-911-19	DIODE 1SS119	
D609	8-719-911-19	DIODE 1SS119	
D701	8-719-911-19	DIODE 1SS119	
D702	8-719-911-19	DIODE 1SS119	
D703	8-719-100-31	DIODE RD5.1EB3	
D704	8-719-911-19	DIODE 1SS119	
D705	8-719-911-19	DIODE 1SS119	
D706	8-719-911-19	DIODE 1SS119	
D707	8-719-911-19	DIODE 1SS119	
D901	8-719-000-06	DIODE MC921	
D902	8-719-911-19	DIODE 1SS119	
		IC	
IC001	8-759-276-07	IC TA7607AP	
IC002	8-759-909-54	IC TDA2546A	
IC003	6-066-721-70	IC TDA3800GS	
IC004	8-759-145-58	IC UPC4558C	
IC005	8-759-602-16	IC M54572L	
IC006	8-759-157-40	IC UPC574J	
IC007	8-759-603-11	IC M50160-115SP	
IC008	8-759-600-66	IC M58653P	
IC009	8-759-105-50	IC UPD7507SC-068	
IC601	8-759-205-76	IC TC504013BP	
IC901	8-759-101-73	IC UPC1513HA	
IC902	8-759-802-11	IC LA7091	
		COIL	
L001	1-408-397-00	MICRO INDUCTOR 1UH	
L002	1-408-592-41	MICRO INDUCTOR 1.2UH	
L003	1-408-406-00	MICRO INDUCTOR 5.6UH	
L004	1-408-406-00	MICRO INDUCTOR 5.6UH	
L005	1-408-405-00	MICRO INDUCTOR 4.7UH	
L006	1-408-406-00	MICRO INDUCTOR 5.6UH	
L007	1-408-403-00	MICRO INDUCTOR 3.3UH	
L008	1-408-397-00	MICRO INDUCTOR 1UH	
L009	1-408-421-00	MICRO INDUCTOR 100UH	
L501	1-408-421-00	MICRO INDUCTOR 100UH	
L502	1-408-417-00	MICRO INDUCTOR 47UH	
L503	1-408-417-00	MICRO INDUCTOR 47UH	
L701	1-407-168-XX	MICRO INDUCTOR 82UH	
L901	1-407-508-00	MICRO INDUCTOR 22MMH	
L902	1-407-510-00	MICRO INDUCTOR 27MMH	
L903	1-410-120-11	MICRO INDUCTOR 1.2MMH	
		VARIABLE COIL	
LV901	1-408-713-00	VARIABLE INDUCTOR	
		TRANSISTOR	
Q001	8-729-203-28	TRANSISTOR 2SC2216	
Q002	8-729-245-83	TRANSISTOR 2SC2458	
Q003	8-729-900-74	TRANSISTOR DTC143TS	
Q004	8-729-900-74	TRANSISTOR DTC143TS	
Q005	⚠ 8-729-374-02	TRANSISTOR 2SB740	
Q006	8-729-900-89	TRANSISTOR DTC144ES	
Q007	8-729-245-83	TRANSISTOR 2SC2458	
Q008	8-729-245-83	TRANSISTOR 2SC2458	
Q009	8-729-245-83	TRANSISTOR 2SC2458	
Q011	8-729-204-83	TRANSISTOR 2SA1048	
Q012	8-729-204-83	TRANSISTOR 2SA1048	
Q013	8-729-900-89	TRANSISTOR DTC144ES	
Q014	8-729-900-89	TRANSISTOR DTC144ES	
Q015	8-729-900-89	TRANSISTOR DTC144ES	
Q201	8-729-204-83	TRANSISTOR 2SA1048	
Q202	8-729-245-83	TRANSISTOR 2SC2458	
Q301	8-729-900-65	TRANSISTOR DTA144ES	
Q501	8-729-245-83	TRANSISTOR 2SC2458	
Q502	8-729-204-83	TRANSISTOR 2SA1048	
Q503	8-729-384-48	TRANSISTOR 2SA844	
Q504	8-729-245-83	TRANSISTOR 2SC2458	
Q505	8-729-245-83	TRANSISTOR 2SC2458	
Q506	8-729-245-83	TRANSISTOR 2SC2458	
Q507	8-729-178-54	TRANSISTOR 2SC2785	
Q508	8-729-900-89	TRANSISTOR DTC144ES	
Q509	8-729-117-52	TRANSISTOR 2SA1175	
Q601	8-729-900-89	TRANSISTOR DTC144ES	
Q602	8-729-245-83	TRANSISTOR 2SC2458	
Q603	8-729-245-83	TRANSISTOR 2SC2458	
Q604	8-729-900-89	TRANSISTOR DTC144ES	
Q605	8-729-900-89	TRANSISTOR DTC144ES	
Q606	8-729-245-83	TRANSISTOR 2SC2458	
Q607	8-729-245-83	TRANSISTOR 2SC2458	
Q608	8-729-245-83	TRANSISTOR 2SC2458	
Q609	8-729-245-83	TRANSISTOR 2SC2458	
Q610	8-729-900-89	TRANSISTOR DTC144ES	

The components identified by shading and mark ⚠ are critical for safety. Replace only with part number specified.

When indicating parts by reference number, please include the board name.

TA-36

Ref.No	Part No.	Description				Remark
Q701	8-729-177-32	TRANSISTOR 2SD773				
Q702	8-729-245-83	TRANSISTOR 2SC2458				
Q703	8-729-900-80	TRANSISTOR DTC114ES				
Q704	8-729-204-83	TRANSISTOR 2SA1048				
Q800	8-729-900-89	TRANSISTOR DTC144ES				
Q802	8-729-900-89	TRANSISTOR DTC144ES				
Q901	8-729-900-89	TRANSISTOR DTC144ES				
Q904	8-729-245-83	TRANSISTOR 2SC2458				
Q906	8-729-177-43	TRANSISTOR 2SD774				
Q907	8-729-245-83	TRANSISTOR 2SC2458				
		RESISTOR				
R001	1-249-421-11	CARBON	2.2K	5%	1/6W	
R002	1-247-847-00	CARBON	4.7K	5%	1/6W	
R003	1-247-815-00	CARBON	220	5%	1/6W	
R004	1-247-819-00	CARBON	330	5%	1/6W	
R005	1-247-813-00	CARBON	180	5%	1/6W	
R006	1-247-837-00	CARBON	1.8K	5%	1/6W	
R007	1-249-419-11	CARBON	1.5K	5%	1/6W	
R008	1-247-867-00	CARBON	33K	5%	1/6W	
R009	1-247-879-00	CARBON	100K	5%	1/6W	
R010	1-247-879-00	CARBON	100K	5%	1/6W	
R011	1-247-901-00	CARBON	820K	5%	1/6W	
R012	1-247-831-00	CARBON	1K	5%	1/6W	
R013	1-247-813-00	CARBON	180	5%	1/6W	
R014	1-247-807-00	CARBON	100	5%	1/6W	
R015	1-247-817-00	CARBON	270	5%	1/6W	
R016	1-247-815-00	CARBON	220	5%	1/6W	
R017	1-247-847-00	CARBON	4.7K	5%	1/6W	
R018	1-247-829-00	CARBON	820	5%	1/6W	
R019	1-247-829-00	CARBON	820	5%	1/6W	
R020	1-247-829-00	CARBON	820	5%	1/6W	
R021	1-247-891-00	CARBON	330K	5%	1/6W	
R022	1-249-437-11	CARBON	47K	5%	1/6W	
R023	1-247-853-00	CARBON	8.2K	5%	1/6W	
R024	1-247-863-00	CARBON	22K	5%	1/6W	
R025	1-247-853-00	CARBON	8.2K	5%	1/6W	
R026	1-247-863-00	CARBON	22K	5%	1/6W	
R027	1-249-429-11	CARBON	10K	5%	1/6W	
R028	1-249-429-11	CARBON	10K	5%	1/6W	
R031	1-247-861-00	CARBON	18K	5%	1/6W	
R032	1-249-434-11	CARBON	27K	5%	1/6W	
R033	1-247-829-00	CARBON	820	5%	1/6W	
R034	1-247-831-00	CARBON	1K	5%	1/6W	
R035	1-215-487-00	METAL	560K	1%	1/6W	
R036	1-215-409-00	METAL	330	1%	1/6W	
R037	1-215-461-00	METAL	47K	1%	1/6W	
R038	1-215-460-00	METAL	43K	1%	1/6W	
R039	1-215-408-00	METAL	300	1%	1/6W	
R040	1-215-486-00	METAL	510K	1%	1/6W	
R041	1-247-831-00	CARBON	1K	5%	1/6W	
R042	1-206-670-00	METAL OXIDE	1.8K	5%	2W	F
R043	1-247-847-00	CARBON	4.7K	5%	1/6W	

Ref.No	Part No.	Description				Remark
R044	1-247-831-00	CARBON	1K	5%	1/6W	
R045	1-247-833-00	CARBON	1.2K	5%	1/6W	
R046	1-249-419-11	CARBON	1.5K	5%	1/6W	
R047	1-249-421-11	CARBON	2.2K	5%	1/6W	
R048	1-247-891-00	CARBON	330K	5%	1/6W	
R049	1-247-863-00	CARBON	22K	5%	1/6W	
R050	1-247-863-00	CARBON	22K	5%	1/6W	
R051	1-247-863-00	CARBON	22K	5%	1/6W	
R052	1-247-863-00	CARBON	22K	5%	1/6W	
R053	1-247-863-00	CARBON	22K	5%	1/6W	
R054	1-247-877-00	CARBON	82K	5%	1/6W	
R055	1-247-851-00	CARBON	6.8K	5%	1/6W	
R056	1-247-843-00	CARBON	3.3K	5%	1/6W	
R058	1-247-867-00	CARBON	33K	5%	1/6W	
R059	1-247-863-00	CARBON	22K	5%	1/6W	
R060	1-247-847-00	CARBON	4.7K	5%	1/6W	
R061	1-247-863-00	CARBON	22K	5%	1/6W	
R062	1-247-867-00	CARBON	33K	5%	1/6W	
R063	1-249-429-11	CARBON	10K	5%	1/6W	
R064	1-249-429-11	CARBON	10K	5%	1/6W	
R065	1-249-429-11	CARBON	10K	5%	1/6W	
R066	1-249-429-11	CARBON	10K	5%	1/6W	
R067	1-247-903-00	CARBON	1M	5%	1/6W	
R068	1-247-831-00	CARBON	1K	5%	1/6W	
R070	1-247-853-00	CARBON	8.2K	5%	1/6W	
R071	1-249-437-11	CARBON	47K	5%	1/6W	
R072	1-249-437-11	CARBON	47K	5%	1/6W	
R073	1-249-437-11	CARBON	47K	5%	1/6W	
R074	1-247-833-00	CARBON	1.2K	5%	1/6W	
R076	1-249-421-11	CARBON	2.2K	5%	1/6W	
R077	1-247-847-00	CARBON	4.7K	5%	1/6W	
R201	1-247-819-00	CARBON	330	5%	1/6W	
R202	1-247-887-00	CARBON	220K	5%	1/6W	
R203	1-247-845-00	CARBON	3.9K	5%	1/6W	
R204	1-247-827-00	CARBON	680	5%	1/6W	
R205	1-247-825-00	CARBON	560	5%	1/6W	
R301	1-249-429-11	CARBON	10K	5%	1/6W	
R302	1-249-429-11	CARBON	10K	5%	1/6W	
R303	1-247-849-00	CARBON	5.6K	5%	1/6W	
R501	1-249-429-11	CARBON	10K	5%	1/6W	
R503	1-247-825-00	CARBON	560	5%	1/6W	
R504	1-249-429-11	CARBON	10K	5%	1/6W	
R505	1-249-429-11	CARBON	10K	5%	1/6W	
R507	1-247-823-00	CARBON	470	5%	1/6W	
R508	1-247-831-00	CARBON	1K	5%	1/6W	
R509	1-249-429-11	CARBON	10K	5%	1/6W	
R510	1-247-847-00	CARBON	4.7K	5%	1/6W	
R511	1-249-429-11	CARBON	10K	5%	1/6W	
R512	1-247-867-00	CARBON	33K	5%	1/6W	
R513	1-247-831-00	CARBON	1K	5%	1/6W	
R514	1-247-807-00	CARBON	100	5%	1/6W	
R516	1-247-815-00	CARBON	220	5%	1/6W	
R517	1-247-825-00	CARBON	560	5%	1/6W	

When indicating parts by reference number, please include the board name.

Ref.No	Part No.	Description				Remark
R519	1-247-815-00	CARBON	220	5%	1/6W	
R523	1-247-847-00	CARBON	4.7K	5%	1/6W	
R524	1-247-807-00	CARBON	100	5%	1/6W	
R525	1-247-831-00	CARBON	1K	5%	1/6W	
R526	1-247-837-00	CARBON	1.8K	5%	1/6W	
R527	1-247-807-00	CARBON	100	5%	1/6W	
R601	1-249-429-11	CARBON	10K	5%	1/6W	
R602	1-249-429-11	CARBON	10K	5%	1/6W	
R603	1-249-429-11	CARBON	10K	5%	1/6W	
R604	1-249-429-11	CARBON	10K	5%	1/6W	
R605	1-249-429-11	CARBON	10K	5%	1/6W	
R606	1-249-429-11	CARBON	10K	5%	1/6W	
R607	1-249-429-11	CARBON	10K	5%	1/6W	
R608	1-249-429-11	CARBON	10K	5%	1/6W	
R609	1-247-849-00	CARBON	5.6K	5%	1/6W	
R610	1-247-867-00	CARBON	33K	5%	1/6W	
R611	1-247-867-00	CARBON	33K	5%	1/6W	
R612	1-247-843-00	CARBON	3.3K	5%	1/6W	
R613	1-249-429-11	CARBON	10K	5%	1/6W	
R614	1-247-861-00	CARBON	18K	5%	1/6W	
R615	1-247-869-00	CARBON	39K	5%	1/6W	
R616	1-249-421-11	CARBON	2.2K	5%	1/6W	
R617	1-249-437-11	CARBON	47K	5%	1/6W	
R618	1-249-429-11	CARBON	10K	5%	1/6W	
R619	1-247-847-00	CARBON	4.7K	5%	1/6W	
R620	1-249-429-11	CARBON	10K	5%	1/6W	
R622	1-249-429-11	CARBON	10K	5%	1/6W	
R701	1-247-791-00	CARBON	22	5%	1/6W	
R702	1-247-831-00	CARBON	1K	5%	1/6W	
R703	1-247-831-00	CARBON	1K	5%	1/6W	
R704	1-247-831-00	CARBON	1K	5%	1/6W	
R705	1-247-831-00	CARBON	1K	5%	1/6W	
R706	1-249-429-11	CARBON	10K	5%	1/6W	
R707	1-249-429-11	CARBON	10K	5%	1/6W	
R800	1-247-847-00	CARBON	4.7K	5%	1/6W	
R801	1-247-847-00	CARBON	4.7K	5%	1/6W	
R802 ⚠	1-212-853-51	FUSIBLE	6.8	5%	1/4W	F
R805	1-249-429-11	CARBON	10K	5%	1/6W	
R806	1-247-843-00	CARBON	3.3K	5%	1/6W	
R820	1-247-869-00	CARBON	39K	5%	1/6W	
R821	1-247-861-00	CARBON	18K	5%	1/6W	
R901	1-249-429-11	CARBON	10K	5%	1/6W	
R902	1-247-783-00	CARBON	10	5%	1/6W	
R903	1-247-859-00	CARBON	15K	5%	1/6W	
R904	1-247-831-00	CARBON	1K	5%	1/6W	
R905	1-247-821-00	CARBON	390	5%	1/6W	
R906	1-247-861-00	CARBON	18K	5%	1/6W	
R907	1-247-885-00	CARBON	180K	5%	1/6W	
R908	1-249-429-11	CARBON	10K	5%	1/6W	
R909	1-247-867-00	CARBON	33K	5%	1/6W	
R912	1-247-899-00	CARBON	680K	5%	1/6W	
R913	1-247-867-00	CARBON	33K	5%	1/6W	
R914	1-247-829-00	CARBON	820	5%	1/6W	

Ref.No	Part No.	Description				Remark
R915	1-249-429-11	CARBON	10K	5%	1/6W	
R916	1-247-831-00	CARBON	1K	5%	1/6W	
R917	1-247-807-00	CARBON	100	5%	1/6W	
R919 ⚠	1-212-853-51	FUSIBLE	6.8	5%	1/4W	F
R921	1-247-831-00	CARBON	1K	5%	1/6W	
R922	1-247-859-00	CARBON	15K	5%	1/6W	
R923	1-247-077-00	CARBON	3.3	5%	1/4W	
R925	1-249-437-11	CARBON	47K	5%	1/6W	
R926	1-247-853-00	CARBON	8.2K	5%	1/6W	
R950	1-247-857-00	CARBON	12K	5%	1/6W	
R951	1-247-867-00	CARBON	33K	5%	1/6W	

VARIABLE RESISTOR

RV001	1-228-993-00	RES, ADJ, CARBON 4.7K
RV002	1-228-995-00	RES, ADJ, CARBON 22K
RV901	1-228-994-00	RES, ADJ, CARBON 10K
RV902	1-228-998-00	RES, ADJ, METAL GLAZE 220K

RELAY

RY901	1-515-418-00	RELAY

SWITCH

S001	1-553-997-00	SWITCH, KEY BOARD
S002	1-553-997-00	SWITCH, KEY BOARD
S003	1-553-997-00	SWITCH, KEY BOARD
S004	1-553-997-00	SWITCH, KEY BOARD
S005	1-553-997-00	SWITCH, KEY BOARD
S006	1-553-997-00	SWITCH, KEY BOARD
S007	1-553-997-00	SWITCH, KEY BOARD

FILTER

SAWF001	1-404-438-00	FILTER, SAW

TRANSFORMER

T001	1-404-068-00	COIL, VIF
T002	1-404-068-00	COIL, VIF
T003	1-404-427-00	VIFT
T004	1-404-427-00	VIFT
T005	1-404-477-00	COIL, IF
T006	1-404-465-00	COIL, VIF (MOLD TYPE)
T007	1-404-477-00	COIL, IF
T008	1-404-619-11	COIL, IF
T701	1-446-571-00	TRANSFORMER, CONVERTOR
T901	1-433-275-00	TRANSFORMER, BIAS OSCILLATOR

TUNER

TU001 ⚠	1-463-577-31	TUNER, ET (BT-883AD)

****

The components identified by shading and mark ⚠ are critical for safety. Replace only with part number specified.

When indicating parts by reference number, please include the board name.

TA-37

Ref.No	Part No.	Description				Remark
	*A-6721-258-A	TA-37 BOARD, COMPLETE (E MODEL)				
		**********				
	*3-662-227-00	HOLDER (R-3), LED				
	*3-674-390-00	HOLDER (B), LED				
		STORAGE BATTERY				
B701	1-528-175-11	BATTERY, STORAGE				
		CAPACITOR				
C001	1-102-529-00	CERAMIC	100PF	5%	50V	
C002	1-102-529-00	CERAMIC	100PF	5%	50V	
C003	1-102-947-00	CERAMIC	10PF	5%	50V	
C004	1-102-523-00	CERAMIC	56PF	5%	50V	
C005	1-161-013-00	CERAMIC	0.01MF	10%	25V	
C006	1-102-125-00	CERAMIC	0.0047MF	10%	50V	
C007	1-102-125-00	CERAMIC	0.0047MF	10%	50V	
C008	1-102-074-00	CERAMIC	0.001MF	10%	50V	
C009	1-102-125-00	CERAMIC	0.0047MF	10%	50V	
C010	1-102-125-00	CERAMIC	0.0047MF	10%	50V	
C011	1-102-125-00	CERAMIC	0.0047MF	10%	50V	
C012	1-102-125-00	CERAMIC	0.0047MF	10%	50V	
C013	1-123-369-00	ELECT	4.7MF	20%	25V	
C014	1-102-125-00	CERAMIC	0.0047MF	10%	50V	
C015	1-161-059-00	CERAMIC	0.047MF	10%	25V	
C016	1-102-529-00	CERAMIC	100PF	5%	50V	
C017	1-102-963-00	CERAMIC	33PF	5%	50V	
C018	1-102-504-00	CERAMIC	4PF	0.25PF	50V	
C019	1-102-529-00	CERAMIC	100PF	5%	50V	
C020	1-102-504-00	CERAMIC	4PF	0.25PF	50V	
C021	1-102-963-00	CERAMIC	33PF	5%	50V	
C022	1-123-333-00	ELECT	100MF	20%	16V	
C023	1-161-013-00	CERAMIC	0.01MF	10%	25V	
C024	1-102-125-00	CERAMIC	0.0047MF	10%	50V	
C025	1-123-379-00	ELECT	0.47MF	20%	50V	
C058	1-123-333-00	ELECT	100MF	20%	16V	
C059	1-123-333-00	ELECT	100MF	20%	16V	
C060	1-123-356-00	ELECT	10MF	20%	16V	
C061	1-161-013-00	CERAMIC	0.01MF	10%	25V	
C062	1-123-356-00	ELECT	10MF	20%	16V	
C063	1-102-125-00	CERAMIC	0.0047MF	10%	50V	
C064	1-161-013-00	CERAMIC	0.01MF	10%	25V	
C065	1-102-963-00	CERAMIC	33PF	5%	50V	
C066	1-130-493-00	MYLAR	0.068MF	5%	50V	
C067	1-130-493-00	MYLAR	0.068MF	5%	50V	
C068	1-130-495-00	MYLAR	0.1MF	5%	50V	
C069	1-102-973-00	CERAMIC	100PF	5%	50V	
C070	1-123-380-00	ELECT	1MF	20%	50V	
C072	1-161-013-00	CERAMIC	0.01MF	10%	25V	
C073	1-161-047-00	CERAMIC	0.0047MF	20%	25V	
C074	1-102-116-00	CERAMIC	680PF	10%	50V	
C075	1-102-963-00	CERAMIC	33PF	5%	50V	
C076	1-102-963-00	CERAMIC	33PF	5%	50V	

Ref.No	Part No.	Description				Remark
C077	1-123-381-00	ELECT	2.2MF	20%	50V	
C078	1-161-059-00	CERAMIC	0.047MF	10%	25V	
C079	1-161-013-00	CERAMIC	0.01MF	10%	25V	
C080	1-161-013-00	CERAMIC	0.01MF	10%	25V	
C081	1-123-332-00	ELECT	47MF	20%	16V	
C082	1-123-356-00	ELECT	10MF	20%	50V	
C083	1-123-332-00	ELECT	47MF	20%	16V	
C101	1-102-976-00	CERAMIC	180PF	5%	50V	
C102	1-161-013-00	CERAMIC	0.01MF	10%	25V	
C103	1-123-318-00	ELECT	33MF	20%	16V	
C104	1-102-959-00	CERAMIC	22PF	5%	50V	
C106	1-102-125-00	CERAMIC	0.0047MF	10%	50V	
C107	1-161-013-00	CERAMIC	0.01MF	10%	25V	
C108	1-161-013-00	CERAMIC	0.01MF	10%	25V	
C109	1-102-959-00	CERAMIC	22PF	5%	50V	
C111	1-161-013-00	CERAMIC	0.01MF	10%	25V	
C112	1-161-013-00	CERAMIC	0.01MF	10%	25V	
C113	1-102-959-00	CERAMIC	22PF	5%	50V	
C115	1-161-013-00	CERAMIC	0.01MF	10%	25V	
C116	1-123-380-00	ELECT	1MF	20%	50V	
C117	1-123-333-00	ELECT	100MF	20%	16V	
C118	1-161-059-00	CERAMIC	0.047MF	10%	25V	
C201	1-102-123-00	CERAMIC	0.0033MF	10%	50V	
C301	1-123-356-00	ELECT	10MF	20%	50V	
C501	1-123-356-00	ELECT	10MF	20%	16V	
C502	1-123-381-00	ELECT	2.2MF	20%	50V	
C503	1-123-332-00	ELECT	47MF	20%	16V	
C504	1-102-074-00	CERAMIC	0.001MF	10%	50V	
C505	1-123-369-00	ELECT	4.7MF	20%	25V	
C506	1-102-808-00	CERAMIC	6PF		50V	
C508	1-102-816-00	CERAMIC	120PF	5%	50V	
C511	1-123-369-00	ELECT	4.7MF	20%	25V	
C512	1-123-369-00	ELECT	4.7MF	20%	25V	
C513	1-161-013-00	CERAMIC	0.01MF	10%	25V	
C601	1-101-004-00	CERAMIC	0.01MF		50V	
C602	1-101-004-00	CERAMIC	0.01MF		50V	
C603	1-123-356-00	ELECT	10MF	20%	16V	
C604	1-123-382-00	ELECT	3.3MF	20%	50V	
G605	1-101-001-00	CERAMIC	0.001MF		50V	
C606	1-101-004-00	CERAMIC	0.01MF		50V	
C608	1-123-380-00	ELECT	1MF	20%	50V	
C701	1-123-330-00	ELECT	22MF	20%	16V	
C702	1-123-330-00	ELECT	22MF	20%	16V	
C703	1-102-121-00	CERAMIC	0.0022MF	10%	50V	
C704	1-123-381-00	ELECT	2.2MF	20%	50V	
C705	1-123-330-00	ELECT	22MF	20%	16V	
C706	1-123-308-00	ELECT	220MF	20%	10V	
C800	1-101-004-00	CERAMIC	0.01MF		50V	
C801	1-130-483-00	MYLAR	0.01MF	5%	50V	
C802	1-136-164-00	MYLAR	0.082MF	5%	50V	
C803	1-161-025-00	CERAMIC	0.1MF	10%	25V	
C901	1-123-332-00	ELECT	47MF	20%	16V	
C902	1-102-111-00	CERAMIC	270PF	10%	50V	

When indicating parts by reference number, please include the board name.

Ref.No	Part No.	Description			Remark
C903	1-130-474-00	MYLAR	0.0018MF	5%	50V
C904	1-123-332-00	ELECT	47MF	20%	16V
C905	1-123-332-00	ELECT	47MF	20%	16V
C906	1-123-369-00	ELECT	4.7MF	20%	25V
C907	1-130-473-00	MYLAR	0.0015MF	5%	50V
C908	1-130-483-00	MYLAR	0.01MF	5%	50V
C909	1-123-332-00	ELECT	47MF	20%	16V
C910	1-123-332-00	ELECT	47MF	20%	16V
C911	1-130-471-00	MYLAR	0.001MF	5%	50V
C912	1-123-332-00	ELECT	47MF	20%	16V
C913	1-123-356-00	ELECT	10MF	20%	16V
C915	1-123-379-00	ELECT	0.47MF	20%	50V
C916	1-123-332-00	ELECT	47MF	20%	16V
C917	1-130-481-00	MYLAR	0.0068MF	5%	50V
C918	1-123-356-00	ELECT	10MF	20%	16V
C919	1-130-477-00	MYLAR	0.0033MF	5%	50V
C920	1-130-479-00	MYLAR	0.0047MF	5%	50V
C921	1-123-332-00	ELECT	47MF	20%	16V
C922	1-130-336-00	FILM	0.0068MF	10%	630V
C923	1-107-080-00	MICA	62PF	5%	50V
C951	1-123-332-00	ELECT	47MF	20%	16V
		DISCRIMINATOR			
CD101	1-404-380-00	DISCRIMINATOR, CERAMIC 5.5MHZ			
		FILTER			
CF003	1-527-822-00	OSCILLATOR, CERAMIC			
CF101	1-527-263-00	CERAMIC FILTER (5.5MHZ)			
		CONNECTOR			
CN001	*1-560-891-00	PIN, CONNECTOR 3P			
CN002	*1-560-896-00	PIN, CONNECTOR 8P			
CN003	*1-560-894-00	PIN, CONNECTOR 6P			
CN004	*1-560-900-00	PIN, CONNECTOR 12P			
CN501	*1-560-892-00	PIN, CONNECTOR 4P			
CN502	*1-560-896-00	PIN, CONNECTOR 8P			
CN901	*1-564-030-00	PIN, CONNECTOR 5P			
CN902	*1-564-033-00	PIN, CONNECTOR 8P			
		TRIMMER			
CT001	1-404-134-00	TRAP, CERAMIC (5.5MHZ)			
CT101	1-409-333-00	TRAP, CERAMIC (6.0MHZ)			
		DIODE			
D003	8-719-911-19	DIODE 1SS119			
D004	8-719-911-19	DIODE 1SS119			
D005	*8-719-812-33	DIODE TLG123A			
D006	8-719-812-31	DIODE TLR123			
D007	8-719-812-31	DIODE TLR123			
D008	8-719-000-12	DIODE MC931			
D009	8-719-812-32	DIODE TLY123			
D010	8-719-200-02	DIODE 10E-2			

Ref.No	Part No.	Description	Remark
D101	8-719-911-19	DIODE 1SS119	
D301	8-719-000-12	DIODE MC931	
D302	8-719-911-19	DIODE 1SS119	
D505	8-719-911-19	DIODE 1SS119	
D508	8-719-911-19	DIODE 1SS119	
D601	8-719-911-19	DIODE 1SS119	
D602	8-719-911-19	DIODE 1SS119	
D603	8-719-911-19	DIODE 1SS119	
D604	8-719-911-19	DIODE 1SS119	
D605	8-719-911-19	DIODE 1SS119	
D607	8-719-911-19	DIODE 1SS119	
D608	8-719-911-19	DIODE 1SS119	
D609	8-719-911-19	DIODE 1SS119	
D701	8-719-911-19	DIODE 1SS119	
D702	8-719-911-19	DIODE 1SS119	
D703	8-719-100-31	DIODE RD5.1EB3	
D704	8-719-911-19	DIODE 1SS119	
D705	8-719-911-19	DIODE 1SS119	
D706	8-719-911-19	DIODE 1SS119	
D707	8-719-911-19	DIODE 1SS119	
D901	8-719-000-06	DIODE MC921	
D902	8-719-911-19	DIODE 1SS119	
		IC	
IC001	8-759-276-07	IC TA7607AP	
IC005	8-759-602-16	IC M54572L	
IC006	8-759-157-40	IC UPC574J	
IC007	8-759-603-11	IC M50160-115SP	
IC008	8-759-600-66	IC M58653P	
IC009	8-759-105-50	IC UPD7507SC-068	
IC101	8-759-103-70	IC UPC1391HA	
IC601	8-759-205-76	IC TC504013BP	
IC901	8-759-101-73	IC UPC1513HA	
IC902	8-759-802-11	IC LA7091	
		COIL	
L001	1-408-397-00	MICRO INDUCTOR 1UH	
L002	1-408-397-00	MICRO INDUCTOR 1UH	
L003	1-408-406-00	MICRO INDUCTOR 5.6UH	
L004	1-408-406-00	MICRO INDUCTOR 5.6UH	
L005	1-408-408-00	MICRO INDUCTOR 8.2UH	
L009	1-408-421-00	MICRO INDUCTOR 100UH	
L101	1-408-406-00	MICRO INDUCTOR 5.6UH	
L102	1-408-406-00	MICRO INDUCTOR 5.6UH	
L103	1-408-413-00	MICRO INDUCTOR 22UH	
L104	1-408-412-00	MICRO INDUCTOR 18UH	
L106	1-408-421-00	MICRO INDUCTOR 100UH	
L501	1-408-421-00	MICRO INDUCTOR 100UH	
L502	1-408-417-00	MICRO INDUCTOR 47UH	
L701	1-407-168-XX	MICRO INDUCTOR 82UH	
L901	1-407-508-00	MICRO INDUCTOR 22MMH	
L902	1-407-510-00	MICRO INDUCTOR 27MMH	
L903	1-410-120-11	MICRO INDUCTOR 1.2MMH	

When indicating parts by reference number, please include the board name.

TA-37

Ref.No	Part No.	Description	Remark
		VARIABLE INDUCTOR	
LV901	1-408-713-00	VARIABLE INDUCTOR	
		TRANSISTOR	
Q001	8-729-203-28	TRANSISTOR 2SC2216	
Q005 ⚠	8-729-374-02	TRANSISTOR 2SB740	
Q006	8-729-900-89	TRANSISTOR DTC144ES	
Q007	8-729-245-83	TRANSISTOR 2SC2458	
Q008	8-729-245-83	TRANSISTOR 2SC2458	
Q009	8-729-245-83	TRANSISTOR 2SC2458	
Q011	8-729-204-83	TRANSISTOR 2SA1048	
Q012	8-729-204-83	TRANSISTOR 2SA1048	
Q013	8-729-900-89	TRANSISTOR DTC144ES	
Q015	8-729-900-89	TRANSISTOR DTC144ES	
Q101	8-729-245-83	TRANSISTOR 2SC2458	
Q106	8-729-900-74	TRANSISTOR DTC143TS	
Q201	8-729-204-83	TRANSISTOR 2SA1048	
Q202	8-729-245-83	TRANSISTOR 2SC2458	
Q301	8-729-900-65	TRANSISTOR DTA144ES	
Q501	8-729-245-83	TRANSISTOR 2SC2458	
Q502	8-729-204-83	TRANSISTOR 2SA1048	
Q503	8-729-117-54	TRANSISTOR 2SA1175	
Q504	8-729-245-83	TRANSISTOR 2SC2458	
Q505	8-729-245-83	TRANSISTOR 2SC2458	
Q506	8-729-245-83	TRANSISTOR 2SC2458	
Q507	8-729-245-83	TRANSISTOR 2SC2458	
Q508	8-729-900-80	TRANSISTOR DTC114ES	
Q509	8-729-204-83	TRANSISTOR 2SA1048	
Q601	8-729-900-89	TRANSISTOR DTC144ES	
Q602	8-729-245-83	TRANSISTOR 2SC2458	
Q603	8-729-245-83	TRANSISTOR 2SC2458	
Q604	8-729-900-89	TRANSISTOR DTC144ES	
Q605	8-729-900-89	TRANSISTOR DTC144ES	
Q606	8-729-245-83	TRANSISTOR 2SC2458	
Q607	8-729-245-83	TRANSISTOR 2SC2458	
Q608	8-729-245-83	TRANSISTOR 2SC2458	
Q609	8-729-245-83	TRANSISTOR 2SC2458	
Q610	8-729-900-89	TRANSISTOR DTC144ES	
Q701	8-729-177-32	TRANSISTOR 2SD773	
Q702	8-729-245-83	TRANSISTOR 2SC2458	
Q703	8-729-900-80	TRANSISTOR DTC114ES	
Q704	8-729-204-83	TRANSISTOR 2SA1048	
Q800	8-729-900-89	TRANSISTOR DTC144ES	
Q802	8-729-900-89	TRANSISTOR DTC144ES	
Q901	8-729-900-89	TRANSISTOR DTC144ES	
Q904	8-729-245-83	TRANSISTOR 2SC2458	
Q906	8-729-177-43	TRANSISTOR 2SD774	
Q907	8-729-245-83	TRANSISTOR 2SC2458	
		RESISTOR	
R001	1-249-421-11	CARBON 2.2K 5% 1/6W	
R002	1-247-847-00	CARBON 4.7K 5% 1/6W	

Ref.No	Part No.	Description				Remark
R003	1-247-815-00	CARBON	220	5%	1/6W	
R004	1-247-819-00	CARBON	330	5%	1/6W	
R005	1-247-813-00	CARBON	180	5%	1/6W	
R006	1-247-837-00	CARBON	1.8K	5%	1/6W	
R007	1-249-419-11	CARBON	1.5K	5%	1/6W	
R008	1-247-867-00	CARBON	33K	5%	1/6W	
R009	1-247-879-00	CARBON	100K	5%	1/6W	
R010	1-247-879-00	CARBON	100K	5%	1/6W	
R011	1-247-901-00	CARBON	820K	5%	1/6W	
R012	1-247-831-00	CARBON	1K	5%	1/6W	
R013	1-247-813-00	CARBON	180	5%	1/6W	
R042	1-206-670-00	METAL OXIDE	1.8K	5%	2W	F
R043	1-247-847-00	CARBON	4.7K	5%	1/6W	
R044	1-247-831-00	CARBON	1K	5%	1/6W	
R045	1-247-833-00	CARBON	1.2K	5%	1/6W	
R046	1-249-421-11	CARBON	2.2K	5%	1/6W	
R047	1-249-421-11	CARBON	2.2K	5%	1/6W	
R048	1-247-891-00	CARBON	330K	5%	1/6W	
R049	1-247-863-00	CARBON	22K	5%	1/6W	
R050	1-247-863-00	CARBON	22K	5%	1/6W	
R051	1-247-863-00	CARBON	22K	5%	1/6W	
R052	1-247-863-00	CARBON	22K	5%	1/6W	
R053	1-247-863-00	CARBON	22K	5%	1/6W	
R054	1-247-877-00	CARBON	82K	5%	1/6W	
R055	1-247-851-00	CARBON	6.8K	5%	1/6W	
R056	1-247-843-00	CARBON	3.3K	5%	1/6W	
R058	1-247-867-00	CARBON	33K	5%	1/6W	
R059	1-247-863-00	CARBON	22K	5%	1/6W	
R060	1-247-847-00	CARBON	4.7K	5%	1/6W	
R061	1-247-863-00	CARBON	22K	5%	1/6W	
R062	1-247-867-00	CARBON	33K	5%	1/6W	
R063	1-249-429-11	CARBON	10K	5%	1/6W	
R064	1-249-429-11	CARBON	10K	5%	1/6W	
R065	1-249-429-11	CARBON	10K	5%	1/6W	
R066	1-249-429-11	CARBON	10K	5%	1/6W	
R067	1-247-903-00	CARBON	1M	5%	1/6W	
R068	1-247-831-00	CARBON	1K	5%	1/6W	
R070	1-247-853-00	CARBON	8.2K	5%	1/6W	
R071	1-249-437-11	CARBON	47K	5%	1/6W	
R072	1-249-437-11	CARBON	47K	5%	1/6W	
R073	1-249-437-11	CARBON	47K	5%	1/6W	
R074	1-247-833-00	CARBON	1.2K	5%	1/6W	
R076	1-249-419-11	CARBON	1.5K	5%	1/6W	
R077	1-247-847-00	CARBON	4.7K	5%	1/6W	
R101	1-247-807-00	CARBON	100	5%	1/6W	
R102	1-247-817-00	CARBON	270	5%	1/6W	
R103	1-247-815-00	CARBON	220	5%	1/6W	
R104	1-247-829-00	CARBON	820	5%	1/6W	
R105	1-247-819-00	CARBON	330	5%	1/6W	
R108	1-247-847-00	CARBON	4.7K	5%	1/6W	
R109	1-247-863-00	CARBON	22K.	5%	1/6W	
R110	1-247-831-00	CARBON	1K	5%	1/6W	
R111	1-247-815-00	CARBON	220	5%	1/6W	

The components identified by shading and mark ⚠ are critical for safety. Replace only with part number specified.

When indicating parts by reference number, please include the board name.

Ref.No	Part No.	Description				Remark
R113	1-247-831-00	CARBON	1K	5%	1/6W	
R115	1-249-437-11	CARBON	47K	5%	1/6W	
R116	1-247-891-00	CARBON	330K	5%	1/6W	
R201	1-247-819-00	CARBON	330	5%	1/6W	
R202	1-247-887-00	CARBON	220K	5%	1/6W	
R203	1-247-845-00	CARBON	3.9K	5%	1/6W	
R204	1-247-827-00	CARBON	680	5%	1/6W	
R205	1-247-825-00	CARBON	560	5%	1/6W	
R301	1-249-429-11	CARBON	10K	5%	1/6W	
R302	1-249-429-11	CARBON	10K	5%	1/6W	
R303	1-247-849-00	CARBON	5.6K	5%	1/6W	
R501	1-249-429-11	CARBON	10K	5%	1/6W	
R503	1-247-825-00	CARBON	560	5%	1/6W	
R504	1-249-429-11	CARBON	10K	5%	1/6W	
R505	1-247-847-00	CARBON	4.7K	5%	1/6W	
R507	1-247-833-00	CARBON	1.2K	5%	1/6W	
R508	1-247-831-00	CARBON	1K	5%	1/6W	
R509	1-247-849-00	CARBON	5.6K	5%	1/6W	
R510	1-247-847-00	CARBON	4.7K	5%	1/6W	
R511	1-249-429-11	CARBON	10K	5%	1/6W	
R512	1-247-857-00	CARBON	12K	5%	1/6W	
R513	1-247-831-00	CARBON	1K	5%	1/6W	
R514	1-247-807-00	CARBON	100	5%	1/6W	
R516	1-247-815-00	CARBON	220	5%	1/6W	
R517	1-247-825-00	CARBON	560	5%	1/6W	
R519	1-247-815-00	CARBON	220	5%	1/6W	
R523	1-247-847-00	CARBON	4.7K	5%	1/6W	
R524	1-247-807-00	CARBON	100	5%	1/6W	
R525	1-247-831-00	CARBON	1K	5%	1/6W	
R526	1-247-837-00	CARBON	1.8K	5%	1/6W	
R527	1-247-807-00	CARBON	100	5%	1/6W	
R550	1-247-799-00	CARBON	47	5%	1/6W	
R601	1-249-429-11	CARBON	10K	5%	1/6W	
R602	1-249-429-11	CARBON	10K	5%	1/6W	
R603	1-249-429-11	CARBON	10K	5%	1/6W	
R604	1-249-429-11	CARBON	10K	5%	1/6W	
R605	1-249-429-11	CARBON	10K	5%	1/6W	
R606	1-249-429-11	CARBON	10K	5%	1/6W	
R607	1-249-429-11	CARBON	10K	5%	1/6W	
R608	1-249-429-11	CARBON	10K	5%	1/6W	
R609	1-247-849-00	CARBON	5.6K	5%	1/6W	
R610	1-247-867-00	CARBON	33K	5%	1/6W	
R611	1-247-867-00	CARBON	33K	5%	1/6W	
R612	1-247-843-00	CARBON	3.3K	5%	1/6W	
R613	1-249-429-11	CARBON	10K	5%	1/6W	
R614	1-247-861-00	CARBON	18K	5%	1/6W	
R615	1-247-869-00	CARBON	39K	5%	1/6W	
R616	1-249-421-11	CARBON	2.2K	5%	1/6W	
R617	1-249-437-11	CARBON	47K	5%	1/6W	
R618	1-249-429-11	CARBON	10K	5%	1/6W	
R619	1-247-847-00	CARBON	4.7K	5%	1/6W	
R620	1-249-429-11	CARBON	10K	5%	1/6W	
R622	1-249-429-11	CARBON	10K	5%	1/6W	

Ref.No	Part No.	Description				Remark
R701	1-247-791-00	CARBON	22	5%	1/6W	
R702	1-247-831-00	CARBON	1K	5%	1/6W	
R703	1-247-831-00	CARBON	1K	5%	1/6W	
R704	1-247-831-00	CARBON	1K	5%	1/6W	
R705	1-247-831-00	CARBON	1K	5%	1/6W	
R706	1-249-429-11	CARBON	10K	5%	1/6W	
R707	1-249-429-11	CARBON	10K	5%	1/6W	
R800	1-247-847-00	CARBON	4.7K	5%	1/6W	
R801	1-247-847-00	CARBON	4.7K	5%	1/6W	
R802	⚠ 1-212-853-51	FUSIBLE	6.8	5%	1/4W	F
R805	1-249-429-11	CARBON	10K	5%	1/6W	
R806	1-247-843-00	CARBON	3.3K	5%	1/6W	
R820	1-247-869-00	CARBON	39K	5%	1/6W	
R821	1-247-861-00	CARBON	18K	5%	1/6W	
R901	1-249-429-11	CARBON	10K	5%	1/6W	
R902	1-247-783-00	CARBON	10	5%	1/6W	
R903	1-247-859-00	CARBON	15K	5%	1/6W	
R904	1-247-831-00	CARBON	1K	5%	1/6W	
R905	1-247-821-00	CARBON	390	5%	1/6W	
R906	1-247-861-00	CARBON	18K	5%	1/6W	
R907	1-247-885-00	CARBON	180K	5%	1/6W	
R908	1-249-429-11	CARBON	10K	5%	1/6W	
R909	1-247-867-00	CARBON	33K	5%	1/6W	
R912	1-247-899-00	CARBON	680K	5%	1/6W	
R913	1-247-867-00	CARBON	33K	5%	1/6W	
R914	1-247-829-00	CARBON	820	5%	1/6W	
R915	1-249-429-11	CARBON	10K	5%	1/6W	
R916	1-247-831-00	CARBON	1K	5%	1/6W	
R917	1-247-807-00	CARBON	100	5%	1/6W	
R919	⚠ 1-212-853-51	FUSIBLE	6.8	5%	1/4W	F
R921	1-247-831-00	CARBON	1K	5%	1/6W	
R922	1-247-859-00	CARBON	15K	5%	1/6W	
R923	1-247-077-00	CARBON	3.3	5%	1/4W	
R925	1-249-437-11	CARBON	47K	5%	1/6W	
R926	1-247-853-00	CARBON	8.2K	5%	1/6W	
R950	1-247-857-00	CARBON	12K	5%	1/6W	
R951	1-247-867-00	CARBON	33K	5%	1/6W	

VARIABLE RESISTOR

RV001	1-228-993-00	RES, ADJ, CARBON 4.7K
RV901	1-228-994-00	RES, ADJ, CARBON 10K
RV902	1-228-998-00	RES, ADJ, METAL GLAZE 220K

RELAY

RY901	1-515-418-00	RELAY

SWITCH

S001	1-553-997-00	SWITCH, KEY BOARD
S002	1-553-997-00	SWITCH, KEY BOARD
S003	1-553-997-00	SWITCH, KEY BOARD
S004	1-553-997-00	SWITCH, KEY BOARD
S005	1-553-997-00	SWITCH, KEY BOARD

The components identified by shading and mark ⚠ are critical for safety. Replace only with part number specified.

When indicating parts by reference number, please include the board name.

TA-37

Ref.No	Part No.	Description	Remark
S006	1-553-997-00	SWITCH, KEY BOARD	
S007	1-553-997-00	SWITCH, KEY BOARD	
		SAWF	
SAWF101	1-404-563-11	SAWF	
		TRANSFORMER	
T001	1-404-068-00	COIL, VIF	
T002	1-404-068-00	COIL, VIF	
T003	1-404-427-00	VIFT	
T004	1-404-427-00	VIFT	
T101	1-404-428-00	VIFT	
T701	1-446-571-00	TRANSFORMER, CONVERTOR	
T901	1-433-275-00	TRANSFORMER, BIAS OSCILLATOR	
		TUNER	
TU001	⚠ 1-463-584-21	TUNER, ET (8T-881AD)	

****

The components identified by shading and mark ⚠ are critical for safety. Replace only with part number specified.

When indicating parts by reference number, please include the board name.

LM-17 PW-15 US-1 LS-11 FL-8 FL-9

Ref.No	Part No.	Description			Remark
	*1-616-601-11	LM-17 BOARD			
		**********			
		CAPACITOR			
C1	1-161-057-00	CERAMIC	0.033MF	20% 25V	
C2	1-161-057-00	CERAMIC	0.033MF	20% 25V	
		COIL			
L1	1-408-120-00	MICRO INDUCTOR 18UH			
L2	1-408-120-00	MICRO INDUCTOR 18UH			
**********					
	*1-617-041-11	PW-15 BOARD			
		**********			
	*3-697-646-01	HOLDER (PW), LED			
		DIODE			
D101	*8-719-812-33	DIODE TLG123A			
		RESISTOR			
R101	1-246-465-00	CARBON	470	5% 1/4W	
		VARIABLE RESISTOR			
RV101	1-230-856-11	RES, VAR, CARBON 50K/50K			
		SWITCH			
SW101	1-554-174-00	SWITCH, KEY BOARD			
**********					
	*1-616-598-11	US-1 BOARD			
		**********			
**********					
	*1-616-600-11	LS-11 BOARD			
		**********			
		CAPACITOR			
C001	1-161-057-00	CERAMIC	0.033MF	20% 25V	
C002	1-161-057-00	CERAMIC	0.033MF	20% 25V	
		COIL			
L001	1-408-120-00	MICRO INDUCTOR 18UH			
L002	1-408-120-00	MICRO INDUCTOR 18UH			
**********					
	*A-6724-466-A	FL-8 BOARD, COMPLETE			
		**********			
	*3-697-607-01	HOLDER (SU), LED			
	*3-697-648-01	HOLDER, INDICATION TUBE			

Ref.No	Part No.	Description			Remark
		CAPACITOR			
C001	1-123-356-00	ELECT	10MF	20% 16V	
		CONNECTOR			
CN001	*1-564-016-00	PIN, CONNECTOR 6P			
CN002	*1-564-001-11	PIN, CONNECTOR 2P			
		COMPOSITION CIRCUIT BLOCK			
CP001	1-232-957-11	COMPOSITION CIRCUIT BLOCK			
CP002	1-232-816-11	COMPOSITION CIRCUIT BLOCK			
		DIODE			
D001	8-719-906-49	DIODE LT-9230N			
D002	*8-719-812-33	DIODE TLG123A			
		INDICATOR TUBE			
FL001	1-519-366-11	INDICATOR TUBE, FLUORESCENT			
		IC			
IC001	8-741-131-70	IC BX-1317			
		RESISTOR			
R001	1-249-437-11	CARBON	47K	5% 1/6W	
R003	1-247-801-00	CARBON	56	5% 1/6W	
R004	1-247-813-00	CARBON	180	5% 1/6W	
R005	1-247-813-00	CARBON	180	5% 1/6W	
R006	1-249-421-11	CARBON	2.2K	5% 1/6W	
R007	1-249-421-11	CARBON	2.2K	5% 1/6W	
		VARIABLE RESISTOR			
RV001	1-230-986-11	RES, VAR, SLIDE 20K/20K			
RV002	1-228-994-00	RES, ADJ, CARBON 10K			
RV003	1-228-994-00	RES, ADJ, CARBON 10K			
		SWITCH			
S001	1-554-174-00	SWITCH, KEY BOARD			
S002	1-554-174-00	SWITCH, KEY BOARD			
S003	1-554-174-00	SWITCH, KEY BOARD			
S004	1-554-174-00	SWITCH, KEY BOARD			
S005	1-554-174-00	SWITCH, KEY BOARD			
S006	1-554-174-00	SWITCH, KEY BOARD			
**********					
	*A-6724-467-A	FL-9 BOARD, COMPLETE			
		**********			
		CAPACITOR			
C102	1-123-617-00	ELECT	10MF	20% 16V	
C103	1-123-617-00	ELECT	10MF	20% 16V	
C104	1-102-508-00	CERAMIC	10PF	0.5PF 50V	

When indicating parts by reference number, please include the board name.

FL-9 FR-20

Ref.No	Part No.	Description				Remark
C105	1-161-025-00	CERAMIC	0.1MF	10%	25V	
		CONNECTOR				
CN101	*1-564-003-00	PIN, CONNECTOR 4P				
CN102	*1-564-011-11	PIN, CONNECTOR 12P				
		COMPOSITION CIRCUIT BLOCK				
CP101	1-232-967-11	COMPOSITION CIRCUIT BLOCK				
		TRIMMER				
CV101	1-141-022-11	CAP, TRIMMER, CERAMIC				
		DIODE				
D102	8-719-100-54	DIODE RD9.1E-B2				
		IC				
IC101	8-752-800-26	IC CXP5016-104S				
IC102	8-759-913-41	IC S-8054ALB				
		TRANSISTOR				
Q102	8-729-900-80	TRANSISTOR DTC114ES				
Q103	8-729-900-80	TRANSISTOR DTC114ES				
		RESISTOR				
R104	1-249-429-11	CARBON	10K	5%	1/6W	
R107	1-247-843-00	CARBON	3.3K	5%	1/6W	
R109	1-247-879-00	CARBON	100K	5%	1/6W	
		CRYSTAL				
X101	1-567-519-11	VIBRATOR, CRYSTAL (4.194304MHz)				
**********						
	*A-6725-469-A	FR-20 BOARD, COMPLETE				
		**********				
	*3-684-005-01	HOLDER (S), LED				
	*3-697-663-01	HOLDER (FR), LED				
		CAPACITOR				
C001	1-161-025-00	CERAMIC	0.1MF	10%	25V	
C002	1-161-025-00	CERAMIC	0.1MF	10%	25V	
C003	1-102-518-00	CERAMIC	33PF	5%	50V	
C004	1-102-518-00	CERAMIC	33PF	5%	50V	
		CONNECTOR				
CN004	*1-564-016-00	PIN, CONNECTOR 6P				
CN005	*1-564-013-00	PIN, CONNECTOR 3P				
CN006	*1-564-013-00	PIN, CONNECTOR 3P				
		DIODE				
D001	8-719-911-19	DIODE 1SS119				

Ref.No	Part No.	Description	Remark
D002	8-719-911-19	DIODE 1SS119	
D003	8-719-911-19	DIODE 1SS119	
D004	8-719-911-19	DIODE 1SS119	
D005	8-719-911-19	DIODE 1SS119	
D006	8-719-911-19	DIODE 1SS119	
D007	8-719-911-19	DIODE 1SS119	
D008	*8-719-812-33	DIODE TLG123A	
D009	8-719-812-31	DIODE TLR123	
D010	8-719-812-31	DIODE TLR123	
D011	8-719-812-31	DIODE TLR123	
D012	8-719-812-30	DIODE TLO123	
D013	8-719-812-32	DIODE TLY123	
D014	8-719-812-32	DIODE TLY123	
D015	*8-719-812-33	DIODE TLG123A	
D016	*8-719-812-33	DIODE TLG123A	
D017	*8-719-812-33	DIODE TLG123A	
D018	*8-719-812-33	DIODE TLG123A	
D019	*8-719-812-33	DIODE TLG123A	
D020	*8-719-812-33	DIODE TLG123A	
D021	*8-719-812-33	DIODE TLG123A	
D022	*8-719-812-33	DIODE TLG123A	
D023	*8-719-812-33	DIODE TLG123A	
D024	*8-719-812-33	DIODE TLG123A	
D025	8-719-911-19	DIODE 1SS119	
D026	8-719-911-19	DIODE 1SS119	
D027	8-719-911-19	DIODE 1SS119	
D028	8-719-911-19	DIODE 1SS119	
D029	8-719-911-19	DIODE 1SS119	
D030	8-719-911-19	DIODE 1SS119	
D031	8-719-911-19	DIODE 1SS119	
D032	8-719-911-19	DIODE 1SS119	
D033	8-719-911-19	DIODE 1SS119	
D034	8-719-911-19	DIODE 1SS119	
D035	8-719-911-19	DIODE 1SS119	
D036	8-719-911-19	DIODE 1SS119	
		IC	
IC001	8-759-105-54	IC UPD7508HG-536-22	
IC002	8-759-901-38	IC SN74LS138N	
		TRANSISTOR	
Q001	8-729-245-83	TRANSISTOR 2SC2458	
Q002	8-729-245-83	TRANSISTOR 2SC2458	
Q003	8-729-902-11	TRANSISTOR 2SC2021	
Q004	8-729-902-11	TRANSISTOR 2SC2021	
Q005	8-729-245-83	TRANSISTOR 2SC2458	
Q006	8-729-245-83	TRANSISTOR 2SC2458	
Q007	8-729-245-83	TRANSISTOR 2SC2458	
Q008	8-729-245-83	TRANSISTOR 2SC2458	
Q009	8-729-117-54	TRANSISTOR 2SA1175-F	
Q104	8-729-900-61	TRANSISTOR DTA114ES	

When indicating parts by reference number, please include the board name.

Ref.No	Part No.	Description				Remark
		RESISTOR				
R004	1-249-437-11	CARBON	47K	5%	1/6W	
R005	1-247-873-00	CARBON	56K	5%	1/6W	
R006	1-249-437-11	CARBON	47K	5%	1/6W	
R007	1-247-873-00	CARBON	56K	5%	1/6W	
R008	1-247-843-00	CARBON	3.3K	5%	1/6W	
R009	1-247-879-00	CARBON	100K	5%	1/6W	
R018	1-247-879-00	CARBON	100K	5%	1/6W	
R019	1-247-879-00	CARBON	100K	5%	1/6W	
R020	1-247-879-00	CARBON	100K	5%	1/6W	
R021	1-247-879-00	CARBON	100K	5%	1/6W	
R022	1-247-879-00	CARBON	100K	5%	1/6W	
R023	1-247-879-00	CARBON	100K	5%	1/6W	
R024	1-247-879-00	CARBON	100K	5%	1/6W	
R025	1-247-805-00	CARBON	82	5%	1/6W	
R026	1-247-805-00	CARBON	82	5%	1/6W	
R027	1-247-805-00	CARBON	82	5%	1/6W	
R028	1-247-805-00	CARBON	82	5%	1/6W	
R029	1-247-805-00	CARBON	82	5%	1/6W	
R030	1-247-805-00	CARBON	82	5%	1/6W	
R031	1-247-805-00	CARBON	82	5%	1/6W	
R032	1-247-809-00	CARBON	120	5%	1/6W	
R033	1-247-825-00	CARBON	560	5%	1/6W	
R034	1-247-825-00	CARBON	560	5%	1/6W	
R035	1-249-421-11	CARBON	2.2K	5%	1/6W	
R036	1-247-859-00	CARBON	15K	5%	1/6W	
R037	1-247-843-00	CARBON	3.3K	5%	1/6W	
		VARIABLE RESISTOR				
RV001	1-230-431-11	RES, VAR, CARBON 100K				
RV002	1-230-430-11	RES, VAR, CARBON 10K				
RV003	1-230-430-11	RES, VAR, CARBON 10K				
		SWITCH				
S001	1-553-716-00	SWITCH, SLIDE				
S002	1-553-754-00	SWITCH, SLIDE				
S003	1-553-716-00	SWITCH, SLIDE				
S004	1-553-754-00	SWITCH, SLIDE				
S005	1-553-716-00	SWITCH, SLIDE				
S006	1-553-754-00	SWITCH, SLIDE				
S007	1-553-716-00	SWITCH, SLIDE				
S008	1-553-716-00	SWITCH, SLIDE				
S009	1-553-716-00	SWITCH, SLIDE				
S010	1-553-754-00	SWITCH, SLIDE				
S011	1-554-174-00	SWITCH, KEY BOARD				
S012	1-554-174-00	SWITCH, KEY BOARD				
S013	1-554-174-00	SWITCH, KEY BOARD				
S014	1-554-174-00	SWITCH, KEY BOARD				
S015	1-554-174-00	SWITCH, KEY BOARD				
S016	1-554-174-00	SWITCH, KEY BOARD				
S017	1-554-174-00	SWITCH, KEY BOARD				
S018	1-554-174-00	SWITCH, KEY BOARD				
S019	1-554-174-00	SWITCH, KEY BOARD				
S020	1-554-174-00	SWITCH, KEY BOARD				
S021	1-554-174-00	SWITCH, KEY BOARD				
S022	1-554-174-00	SWITCH, KEY BOARD				
S023	1-554-174-00	SWITCH, KEY BOARD				
S024	1-554-174-00	SWITCH, KEY BOARD				
S025	1-554-174-00	SWITCH, KEY BOARD				
S026	1-554-174-00	SWITCH, KEY BOARD				
S027	1-554-174-00	SWITCH, KEY BOARD				
S028	1-554-174-00	SWITCH, KEY BOARD				
S029	1-554-174-00	SWITCH, KEY BOARD				
S030	1-554-174-00	SWITCH, KEY BOARD				
S031	1-554-174-00	SWITCH, KEY BOARD				
S032	1-554-174-00	SWITCH, KEY BOARD				
S033	1-554-174-00	SWITCH, KEY BOARD				
S034	1-554-174-00	SWITCH, KEY BOARD				
S035	1-554-174-00	SWITCH, KEY BOARD				
S037	1-554-174-00	SWITCH, KEY BOARD				
S038	1-554-174-00	SWITCH, KEY BOARD				
		CRYSTAL				
X001	1-527-822-00	OSCILLATOR, CERAMIC (4MHz)				
		**********				
	*1-616-599-11	RD-17 BOARD				
		**********				
	*3-696-392-01	HOLDER, PI				
		DIODE				
PC001	8-719-751-42	DIODE NJL5141E				
PC002	8-719-751-42	DIODE NJL5141E				
		**********				
	*1-617-042-11	HP-18 BOARD				
		**********				
		JACK				
J001	1-507-796-21	JACK				
		**********				
	*1-617-043-11	MC-10 BOARD				
		**********				
		JACK				
J901	1-507-678-00	JACK				
		RESISTOR				
R102	1-247-831-00	CARBON	1K	5%	1/6W	
R103	1-247-879-00	CARBON	100K	5%	1/6W	
		**********				
	*1-617-034-11	PJ-3 BOARD				
		**********				
	1-507-907-11	JACK, PIN 4P				
		**********				
	*1-616-602-11	OC-1 BOARD				
		**********				
		MICRO SWITCH				
MS-1	1-570-424-11	SWITCH, MICRO				
MS-2	1-570-424-11	SWITCH, MICRO				
		**********				

When indicating parts by reference number, please include the board name.

POWER BLOCK

Ref.No.	Part No.	Description	Remark
	⚠1-413-229-11	REGULATOR, SWITCHING (SR-21E)	

****

M BOARD, COMPLETE
****

	⚠2-431-533-01	COVER, CAPACITOR	
	⚠*2-431-517-01	PLATE, HOLDER, TRANSISTOR	
	⚠2-431-531-01	RUBBER, STB-SR21	

CAPACITOR

C602	⚠1-161-742-12	CERAMIC	0.0022MF	400V
C603	⚠1-161-742-12	CERAMIC	0.0022MF	400V
C604	⚠1-161-742-12	CERAMIC	0.0022MF	400V
C605	⚠1-161-742-12	CERAMIC	0.0022MF	400V
C606	⚠1-136-416-11	FILM	0.22MF	250V
C607	⚠1-161-743-12	CERAMIC	0.0047MF	400V
C608	⚠1-161-743-12	CERAMIC	0.0047MF	400V
C609	1-125-352-00	ELECT	180MF	400V
C611	1-124-023-00	ELECT	4.7MF	350V
C612	1-124-162-00	ELECT	47MF	10V
C613	1-124-162-00	ELECT	47MF	10V
C621	1-106-347-00	FILM	0.0015MF	200V
C622	1-106-347-00	FILM	0.0015MF	200V
C623	1-161-910-00	CERAMIC	390PF	500V
C624	1-161-910-00	CERAMIC	390PF	500V
C625	1-161-915-00	CERAMIC	0.001MF	500V
C626	1-136-153-00	FILM	0.01MF	50V
C627	1-136-157-00	FILM	0.022MF	50V
C628	1-123-385-00	ELECT	22MF	100V
C630	1-124-597-11	ELECT	2200MF	16V
C631	1-136-157-00	FILM	0.022MF	50V

CONNECTOR

CN620	1-508-847-00	PIN, CONNECTOR 4P

DIODE

D601	8-719-300-63	DIODE LB156
D621	8-719-908-00	DIODE ESAC33-02C5
D622	8-719-900-93	DIODE V09C
D623	8-719-815-85	DIODE 1S1585
D624	8-719-100-61	DIODE RD11EB2
D625	8-719-100-44	DIODE RD7.5EB2
D626	8-719-100-50	DIODE RD9.1EB1
D641	8-719-900-93	DIODE V09C

FERRITE BEAD

FB621	1-543-060-00	BEAD, FERRITE
FB622	1-543-060-00	BEAD, FERRITE
FB623	1-543-060-00	BEAD, FERRITE
FB624	1-543-060-00	BEAD, FERRITE

Ref.No.	Part. No.	Description			Remark

COIL

L601	⚠1-421-824-11	TRANSFORMER, LINE FILTER 20MH			
L621	1-421-791-11	COIL, CHOKE 2MH			

TRANSISTOR

Q601	8-729-104-66	TRANSISTOR 2SC3158			
Q602	8-729-104-66	TRANSISTOR 2SC3158			
Q603	8-729-100-13	TRANSISTOR 2SC2001			
Q604	8-729-100-13	TRANSISTOR 2SC2001			
Q621	8-729-306-72	TRANSISTOR 2SD667A			
Q622	8-729-245-83	TRANSISTOR 2SC2458			

RESISTOR

R602	1-205-783-11	WIRE WOUND	2.2	5W	F
R603	1-246-528-00	CARBON	200K	1/4W	
R604	1-246-528-00	CARBON	200K	1/4W	
R605	1-246-528-00	CARBON	200K	1/4W	
R606	1-246-528-00	CARBON	200K	1/4W	
R607	⚠1-212-946-11	FUSIBLE	3.3	1/2W	F
R608	⚠1-212-946-11	FUSIBLE	3.3	1/2W	F
R609	1-247-700-11	CARBON	100	1/4W	
R610	1-247-700-11	CARBON	100	1/4W	
R611	⚠1-217-418-21	FUSIBLE	0.47	1/2W	F
R621	1-206-475-11	METAL OXIDE	33	2W	F
R622	1-535-363-00	SHUNT	0.02	2W	
R623	1-247-143-00	CARBON	3.3K	1/4W	
R624	1-247-713-11	CARBON	1K	1/4W	
R625	1-247-700-11	CARBON	100	1/4W	
R626	1-213-157-11	METAL OXIDE	15K	1W	F
R627	1-247-713-11	CARBON	1K	1/4W	
R628	1-247-717-11	CARBON	2.2K	1/4W	
R629	1-249-455-11	CARBON	4.7	1/4W	
R630	1-247-702-11	CARBON	150	1/4W	

TRANSFORMER

T601	⚠1-447-677-41	TRANSFORMER, CONVERTER
T602	⚠1-437-120-11	TRANSFORMER, DRIVE

CN BOARD, COMPLETE
****

****

CAPACITOR

C636	1-123-330-00	ELECT	22MF	25V
C637	1-123-323-00	ELECT	470MF	16V
C638	1-124-555-00	ELECT	1000MF	16V
C639	1-123-323-00	ELECT	470MF	16V
C641	1-123-333-00	ELECT	100MF	25V
C642	1-123-333-00	ELECT	100MF	25V
C643	1-123-357-00	ELECT	22MF	50V
C644	1-123-357-00	ELECT	22MF	50V
C645	1-123-356-00	ELECT	10MF	50V
C646	1-123-357-00	ELECT	22MF	50V

The components identified by shading and mark ⚠ are critical for safety. Replace only with part number specified.

When indicating parts by reference number, please include the board name.

POWER BLOCK

Ref.No.	Part No.	Description			Remark
		CONNECTOR			
CN1	*1-564-163-00	PIN, CONNECTOR 6P			
CN001	*1-560-894-00	PIN, CONNECTOR 6P			
CN002	*1-560-893-00	PIN, CONNECTOR 5P			
CN003	*1-560-891-00	PIN, CONNECTOR 3P			
CN004	*1-560-892-00	PIN, CONNECTOR 4P			
CN005	*1-560-896-00	PIN, CONNECTOR 8P			
		DIODE			
D630	8-719-101-04	DIODE RD33EB2			
D631	8-719-911-19	DIODE 1SS119			
D636	8-719-911-19	DIODE 1SS119			
D637	8-719-911-19	DIODE 1SS119			
D638	8-719-100-40	DIODE RD6.8EB1			
D639	8-719-911-19	DIODE 1SS119			
D640	8-719-100-38	DIODE RD6.2EB2			
		COIL			
L622	1-421-421-00	COIL, CHOKE 100μH			
L623	1-421-421-00	COIL, CHOKE 100μH			
L624	1-408-933-00	COIL, CHOKE 10μH			
		TRANSISTOR			
Q623	8-729-245-83	TRANSISTOR 2SC2458-GR			
Q624	8-729-204-83	TRANSISTOR 2SA1048-GR			
Q626	8-729-188-23	TRANSISTOR 2SD882			
Q627	8-729-188-23	TRANSISTOR 2SD882			
Q628	8-729-245-83	TRANSISTOR 2SC2458-GR			
		RESISTOR			
R640	1-247-159-00	CARBON	15K	1/4W	
R641	1-247-147-00	CARBON	4.7K	1/4W	
R642	1-247-147-00	CARBON	4.7K	1/4W	
R643	1-247-141-00	CARBON	2.7K	1/4W	
R644	1-247-143-00	CARBON	3.3K	1/4W	
R645	1-247-134-00	CARBON	1.3K	1/4W	
R646	1-247-155-00	CARBON	10K	1/4W	
R647	1-247-147-00	CARBON	4.7K	1/4W	
R650	1-205-724-11	CEMENT-COATED	22	5W	F
R651	1-247-129-00	CARBON	820	1/4W	
R652	1-205-789-11	CEMENT-COATED	1.8	5W	F
R653 ⚠	1-247-920-61	CARBON	150	1/2W	F
R654	1-247-133-00	CARBON	1.2K	1/4W	
R655	1-247-141-00	CARBON	2.7K	1/4W	
R6					
		VARIABLE RESISTOR			
RV621	1-228-991-00	RES, ADJ, METAL GLAZE 2.2K			
		RELAY			
RY621	1-515-462-00	RELAY			

****

Ref.No	Part No.	Description			Remark
	*1-616-113-11	C BOARD *******			
		CAPACITOR			
C1	1-123-333-00	ELECT	100MF	25V	
C2	1-130-150-00	FILM	0.0056MF	50V	
C3	1-136-159-00	FILM	0.033MF	50V	
C4	1-136-145-00	FILM	0.0022MF	50V	
C5	1-123-318-00	ELECT	33MF	16V	
		DIODE			
D1	8-719-200-02	DIODE 10E-2			
D2	8-719-100-67	DIODE RD13EB1			
		IC			
IC1	8-759-937-59	IC MB-3759			
		RESISTOR			
R1	1-247-825-00	CARBON	560	1/6W	
R2	1-247-867-00	CARBON	33K	1/6W	
R3	1-247-843-00	CARBON	3.3K	1/6W	
R4	1-247-831-00	CARBON	1K	1/6W	
R5	1-247-849-00	CARBON	5.6K	1/6W	
R6	1-249-421-11	CARBON	2.2K	1/6W	
R7	1-247-841-00	CARBON	2.7K	1/6W	
R8	1-247-836-00	CARBON	1.6K	1/6W (STANDARD)	
	1-249-419-11	CARBON	1.5K	1/6W (ADJUST)	
	1-247-837-00	CARBON	1.8K	1/6W (ADJUST)	
R9	1-247-861-00	CARBON	18K	1/6W	
R10	1-247-700-11	CARBON	100	1/4W	
		VARIABLE RESISTOR			
RV1	1-228-141-00	RES, ADJ, METAL GLAZE 500			

****

	*1-616-114-11	D BOARD *******			
		CAPACITOR			
C21	1-136-150-00	FILM	0.0056MF	50V	
C22	1-123-356-00	ELECT	10MF	50V	
C23	1-161-915-00	CERAMIC	0.001MF	500V	
C24	1-123-333-00	ELECT	100MF	25V	
C25	1-136-165-00	FILM	0.1MF	50V	
C26	1-136-165-00	FILM	0.1MF	50V	
C27	1-123-357-00	ELECT	22MF	50V	
C28	1-123-357-00	ELECT	22MF	50V	
		CONNECTOR			
CN21	1-564-163-00	PIN, CONNECTOR 6P			
		DIODE			
D21	8-719-815-85	DIODE 1S1585			
D22	8-719-815-85	DIODE 1S1585			
D23	8-719-815-85	DIODE 1S1585			

The components identified by shading and mark ⚠ are critical for safety. Replace only with part number specified.

When indicating parts by reference number, please include the board name.

POWER BLOCK

Ref. No.	Part No.	Description	Remark
		IC	
IC21	8-759-937-59	IC MB3759	
		COIL	
L21	1-421-550-00	COIL, CHOKE 66μH	
L22	1-421-421-00	COIL, CHOKE 100μH	
L23	1-408-421-00	MICRO INDUCTOR 100μH	
L24	1-408-421-00	MICRO INDUCTOR 100μH	
L25	1-408-427-00	MICRO INDUCTOR 330μH	
L26	1-408-427-00	MICRO INDUCTOR 330μH	
		IC LINK	
PS21	⚠1-532-679-11	LINK, IC	
		TRANSISTOR	
Q21	8-729-177-43	TRANSISTOR 2SD774	
Q22	8-729-177-43	TRANSISTOR 2SD774	
		RESISTOR	
R21	⚠1-247-913-61	CARBON 1K 1/4W F	
R22	1-247-807-00	CARBON 100 1/6W	
R23	1-247-807-00	CARBON 100 1/6W	
R24	1-247-837-00	CARBON 1.8K 1/6W (STANDARD)	
	1-249-419-11	CARBON 1.5K 1/6W (ADJUST)	
	1-249-421-11	CARBON 2.2K 1/6W (ADJUST)	
R25	1-247-859-00	CARBON 15K 1/6W	
R26	1-247-869-00	CARBON 39K 1/6W	
R27	1-247-811-00	CARBON 150 1/6W	
R28	1-247-887-00	CARBON 220K 1/6W	
R29	1-247-831-00	CARBON 1K 1/6W	
		VARIABLE RESISTOR	
RV21	1-228-644-00	RES, ADJ, METAL GLAZE 1K	
		TRANSFORMER	
T21	1-448-269-11	TRANSFORMER, DC-DC CONVERTER	
		**********	
	⚠*1-616-498-11	F BOARD	
		*******	
	⚠1-533-170-11	HOLDER, FUSE	
	⚠*1-535-443-11	TERMINAL, PIN, AC CORD	
		CAPACITOR	
C601	⚠1-136-416-11	FILM 0.22MF 250V	
		FUSE	
F601	⚠1-532-237-11	FUSE, TIME LAG, T3.15A 250V	
		RESISTOR	
R601	⚠1-214-947-21	METAL 2.7M 1/2W	
		**********	

Ref.No	Part No.	Description	Remark
		MISCELLANEOUS	
		**********	
	⚠ 1-413-229-11	REGULATOR, SWITCHING (SR-21E)	
	⚠1-464-481-11	BOOSTER MIXER, RF MODULATOR (E MODEL)	
	⚠1-464-479-11	BOOSTER MIXER, RF MODULATOR (ES MODEL)	
	1-464-526-12	T COIL SENSOR	
	1-464-527-13	S COIL SENSOR	
	*1-555-110-00	CABLE, PIN	
	8-825-508-10	HEAD, FE	
M902	8-838-096-01	MOTOR, DC (BHF-1914A) (CAPSTAN MOTOR)	
M904	X-3696-314-1	MOTOR ASSY, L (LOADING MOTOR)	
M905	X-3696-306-1	MOTOR ASSY, DC (SKATE MOTOR)	
S901	1-554-839-11	SWITCH, LEAF (2 GANG)	
S902	1-570-394-21	SWITCH, ROTARY (ROTARY ENCODER)	

****

ACCESSORIES AND PACKING MATERIALS

****

Part No.	Description	Remark
A-6765-943-A	COMMANDER ASSY (RMT-223)	
1-551-513-00	CORD ASSY, COAXIAL	
*3-677-503-00	SHEET, PROTECTION	
*3-681-287-01	LID, ACCESSORY CASE	
3-694-484-01	DRIVER, VOLUME	
*3-697-649-01	CASE, ACCESSORY	
*3-697-650-01	CUSHION (UPPER)	
*3-697-651-01	CUSHION (LOWER)	
*3-697-684-01	INDIVIDUAL CARTON	
3-760-837-11	MANUAL, INSTRUCTION	
3-760-837-41	MANUAL, INSTRUCTION	(ES MODEL)
3-760-837-51	MANUAL, INSTRUCTION	

****

The components identified by shading and mark ⚠ are critical for safety. Replace only with part number specified.

When indicating parts by reference number, please include the board name.

RMT-223

SERVICE MANUAL

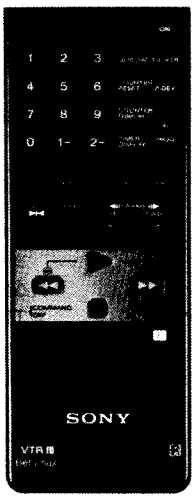

SPECIFICATIONS

Remote Commander RMT-223

Remote control system
Infrared control

Power requirements
3 V DC, 2 IEC designation R6 batteries
(size AA)

Dimensions Approx. 66 × 20 × 175 mm (w/h/d)
(2 1/2 × 3/4 × 7 inches)
incl. projecting parts and controls

Weight Approx. 165 g (5.8 oz)
incl. batteries

MC-Service

REMOTE COMMANDER

SONY

1. REMOTE CONTROL OPERATION

You can control almost all the functions of this video cassette recorder from your armchair using the supplied Remote Commander.

BATTERY INSERTION

1 Open the lid.

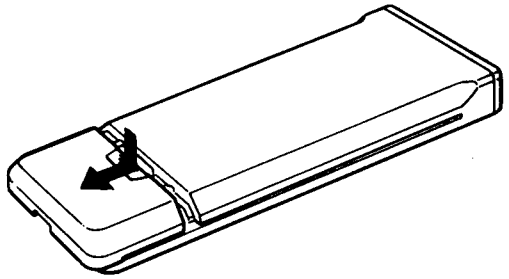

2 Insert two IEC designation R6 batteries with correct polarity.

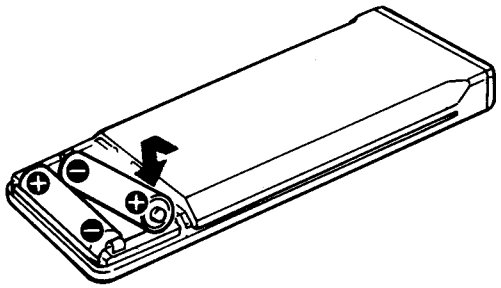

3 Close the lid firmly.

Battery life
In normal operation, batteries will last for about six months. If the range of the Remote Commander becomes noticeably short, replace the batteries with new ones. When the batteries are exhausted, the remote function indicator on the Commander will not light when the buttons on the Commander are pressed.

If the Commander is not to be used for a long period of time, remove the batteries to avoid possible damage from battery leakage.

Notes
- There should be no obstacles between the Commander and the REMOTE SENSOR of the recorder.
- The shorter the distance between the Commander and the recorder, the wider the angle within which the recorder can be controlled.
- The Remote Commander does not function when equipment connected to the CONTROL S jack on the rear is in operation.

OPERATION

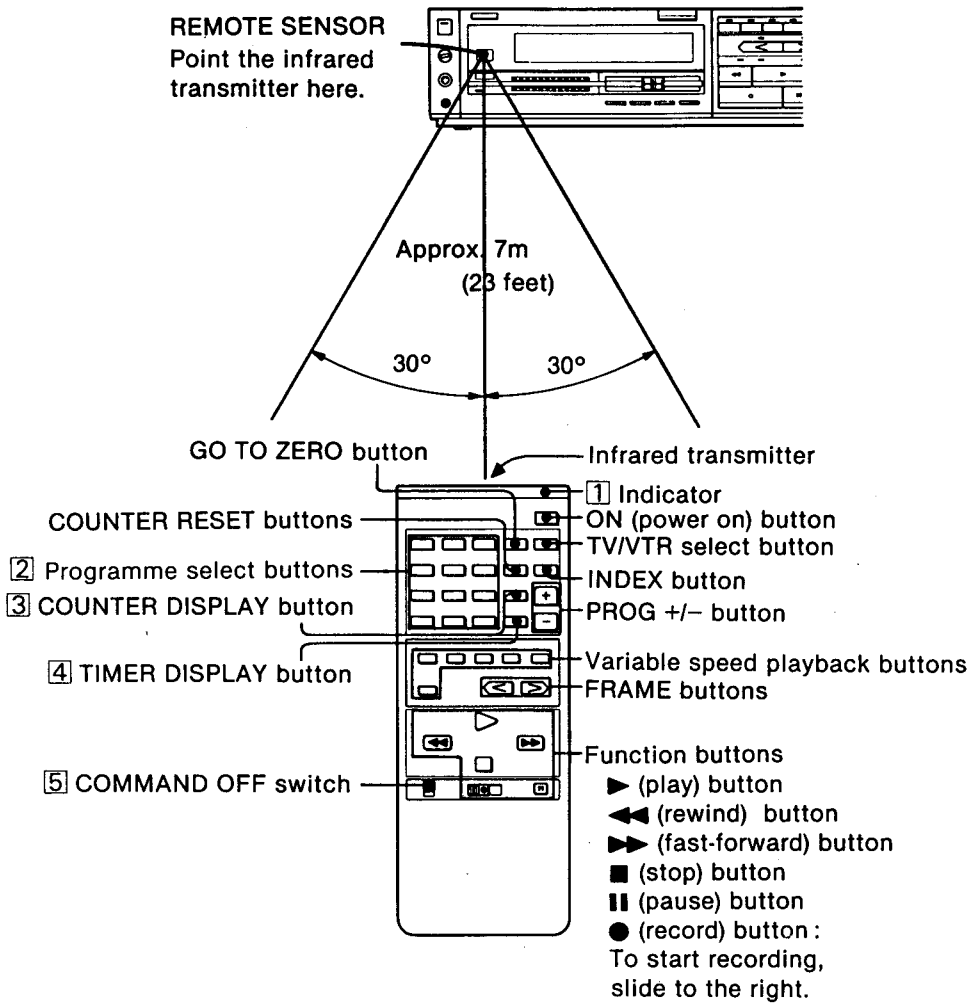

1 Indicator
Lights when any of the buttons on the Commander is pressed.

2 Programme select buttons
Select the programme position directly.
For programmes 1 through 9, press the corresponding single-digit button. For programmes 10 through 29, press " 1- " or " 2- " for the tens-digit and then the corresponding single-digit button. For programme 30, press " 0 ".

3 COUNTER DISPLAY button
To turn off the time counter displayed on the screen, press this button. To turn it on again, press the button again.

4 TIMER DISPLAY button
To display the timer settings on the screen, press this button. To turn them off, press the button again.

5 COMMAND OFF switch
Set to the upper position to turn on the Commander. Set to OFF when the Commander is not in use.

The other buttons have the same functions as the buttons with the same name on the recorder.

Note
Auto play cannot be activated by the Remote Commander.

2. SCHEMATIC DIAGRAM

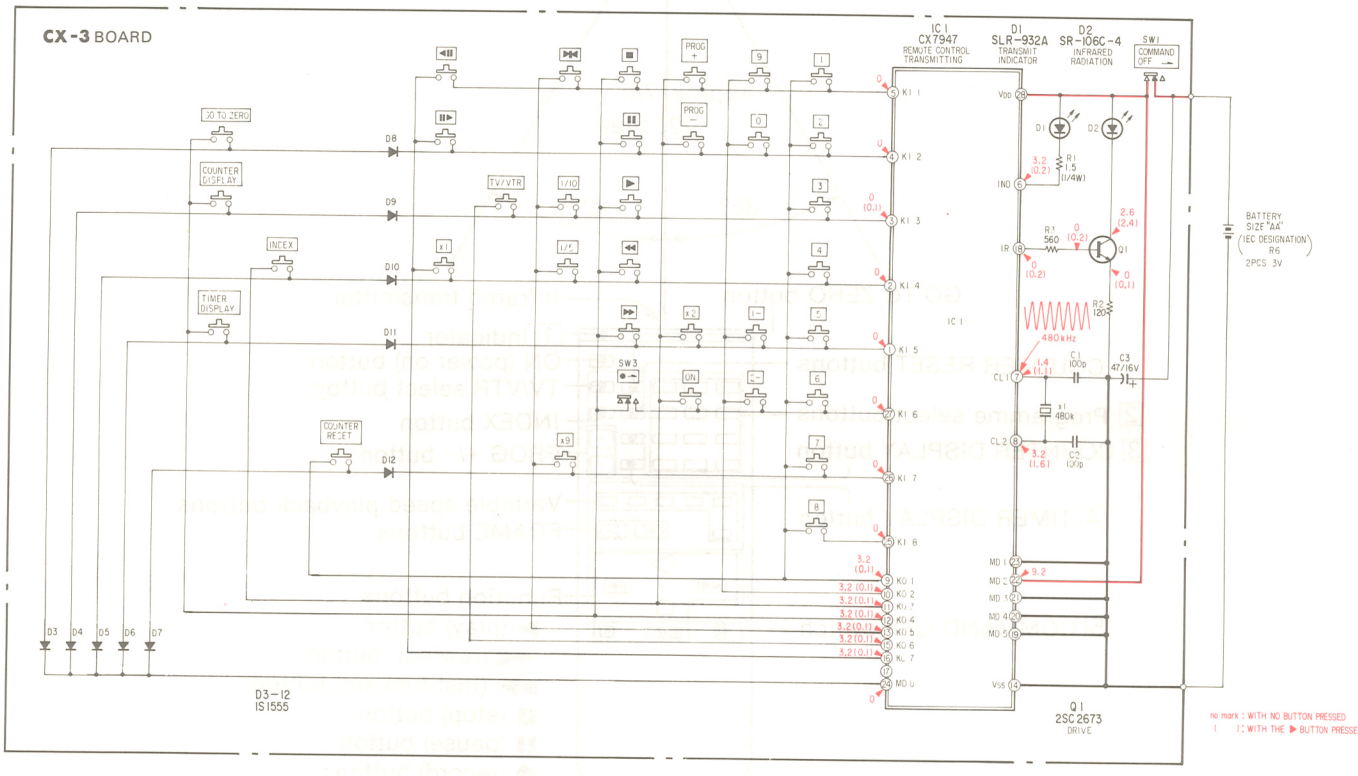

Note on Schematic Diagram:

- All resistors are in ohms, 1/6 W unless otherwise noted. kΩ: 1000 Ω, MΩ: 1000 kΩ
- All capacitors are in μF unless otherwise noted. p: μμF 50WV or less are not indicated except for electrolytics.

- All voltages are dc measured with a VOM (10 MΩ).
- ▬▬ : B+ bus.

When indicating parts by reference number, please include the board name.

• SEMICONDUCTORS

CX7947

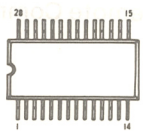

2SC2673

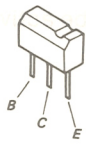

1S1555

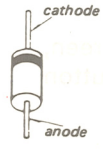

SLR-932A

SR106C

3. PRINTED WIRING BOARD

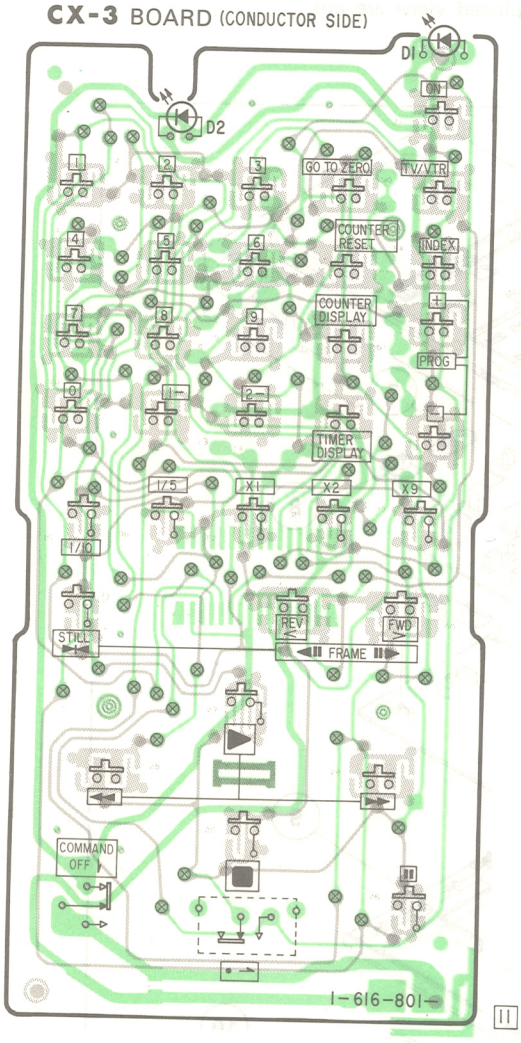

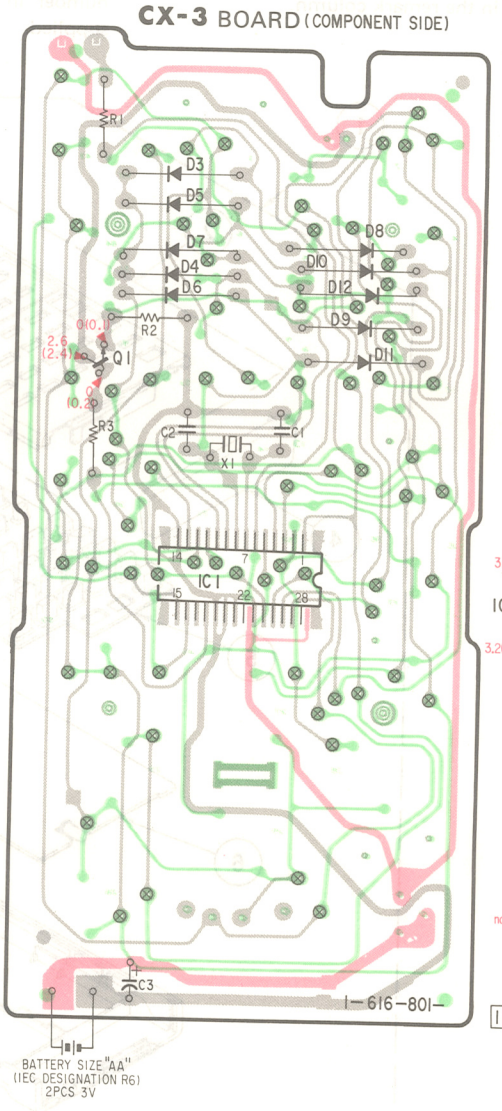

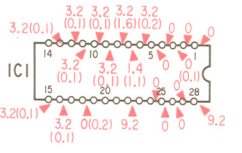

no mark : WITH NO BUTTON PRESSED
( ) : WITH THE ▶ BUTTON PRESSED

Note on Printed Wiring Board:

- ○—— : Indicates a leadwire mounted on the component side.
- ●—— : Indicates a leadwire mounted on the printed side.
- : through hole
- : conductor side/component side.
- : B+ pattern
- : conductor side/component side.
- ⊗ : Through hole.
- : carbon pattern.

When indicating parts by reference number, please include the board name.

4. EXPLODED VIEW

NOTE:

- Itmes with no part number and no description are not stocked because they are seldom required for routine service.
- The construction parts of an assembled part are indicated with a collation number in the remark column.
- Items marked "*" are not stocked since they are seldom required for routine service. Some delay should be anticipated when ordering these items.
- The mechanical parts with no reference number in the exploded views are not supplied.

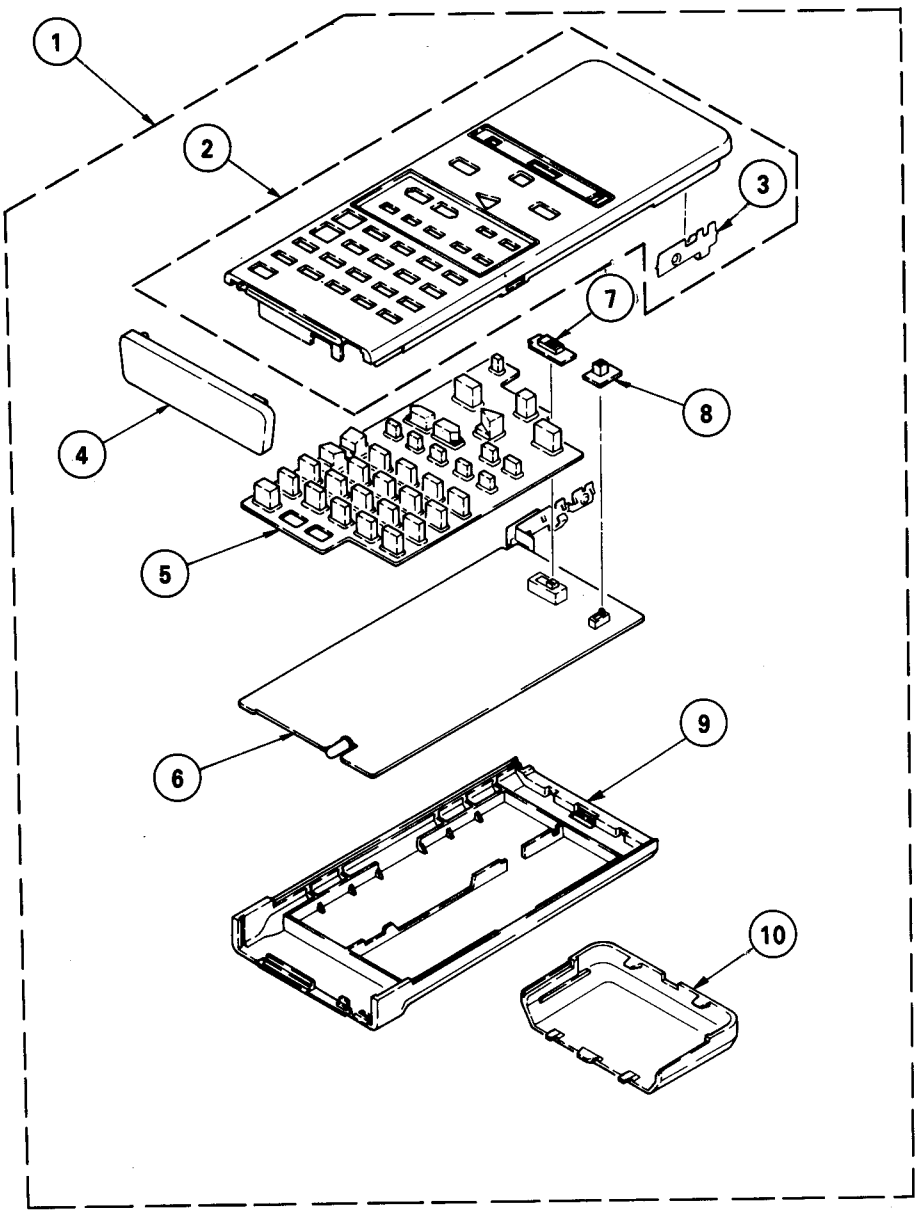

No.	Part No.	Description	Remark
1	A-6765-943-A	COMMANDER ASSY	2-10
2	X-2394-107-1	CASE ASSY, UPPER	3
3	*2-394-113-01	TERMINAL (C), BATTERY	
4	2-394-117-01	FILTER	
5	2-394-129-01	RUBBER, CONTACT	
6	*1-616-801-11	CX-3 BOARD	
7	2-394-119-01	BUTTON, RECORD	
8	2-394-118-11	BUTTON (COMMAND), SLIDE	
9	2-394-125-11	CASE, LOWER	
10	2-394-123-01	COVER, BATTERY	

5. ELECTRICAL PARTS LIST

NOTE:

When indicating parts by reference number, please include the board name.

- Due to standardization, replacements in the parts list may be different from the parts specified in the diagrams or the components used on the set.
- All variable and adjustable resistors have characteristic curve B, unless otherwise noted.

RESISTORS

- All resistors are in ohms
- F : nonflammable

- Items marked "*" are not stocked since they are seldom required for routine service. Some delay should be anticipated when ordering these items.

CAPACITORS

- MF : μF, PF : μμF

COILS

- MMH : mH, UH : μH

Ref.No	Part No.	Description				Remark
	*1-616-801-11	CX-3 BOARD				
		**********				
	*2-394-115-01	TERMINAL (B), BATTERY				
	*2-394-116-01	TERMINAL (A), BATTERY				
		CAPACITOR				
C001	1-102-973-00	CERAMIC	100PF	10%	50V	
C002	1-102-973-00	CERAMIC	100PF	10%	50V	
C003	1-124-236-00	ELECT	47MF	20%	16V	
		DIODE				
D001	8-719-912-39	DIODE SLR-932A				
D002	8-719-107-95	DIODE SR106C				
D003	8-719-815-55	DIODE 1S1555				
D004	8-719-815-55	DIODE 1S1555				
D005	8-719-815-55	DIODE 1S1555				
D006	8-719-815-55	DIODE 1S1555				
D007	8-719-815-55	DIODE 1S1555				
D008	8-719-815-55	DIODE 1S1555				
D009	8-719-815-55	DIODE 1S1555				
D010	8-719-815-55	DIODE 1S1555				
D011	8-719-815-55	DIODE 1S1555				
D012	8-719-815-55	DIODE 1S1555				
		IC				
IC001	8-759-902-22	IC CX-7947				
		TRANSISTOR				
Q001	8-729-967-32	TRANSISTOR 2SC2673				
		RESISTOR				
R001	1-247-073-00	CARBON	1.5	5%	1/4W	
R002	1-247-809-00	CARBON	120	5%	1/6W	
R003	1-247-825-00	CARBON	560	5%	1/6W	
		SWITCH				
SW001	1-553-997-00	SWITCH, KEY BOARD				
SW003	1-554-364-00	SWITCH, SLIDE				
		CRYSTAL				
X001	1-527-476-00	OSCILLATOR, CERAMIC				

****

SL-HF950ES/E
RMT-223

English
8510564-1
Printed in Japan
© 1985

9-972-428-01

Sony Corporation

SL-HF950ES/E
RMT-223

SONY
SERVICE MANUAL

AEP Model
E Model

November, 1985

SUPPLEMENT-1

File this supplement with the service manual.

SUBJECT : ADJUSTMENT

MC-Service

SECTION 7
ADJUSTMENTS

TABLE OF CONTENTS

Section	Title	Page
1.	PREPARATION FOR MECHANICAL SECTION CHECK, ADJUSTMENT AND REPLACEMENT	
1-1.	Disassembly of Cabinet	3
1-2.	Removal of the TA-36/37 Board	3
1-3.	Removal of the SS-50 Board	3
1-4.	Removal of the YC-40 Board	3
1-5.	Removal of the FR-20 Board	3
1-6.	Removal of the FL-8, FL-9 Boards	3
1-7.	Removal of the RP-31 Board	3
1-8.	Removal of the Power Block	3
1-9.	Removal of the Reel Block Assembly	3
1-10.	Removal of the LS Block Assembly (1)	3
1-11.	Removal of the LS Block Assembly (2)	3
1-12.	Removal of the Upper Stay and the Drum Cover	3
1-13.	Removal of the Tray Cover and the Tray M Cover	4
1-14.	Mechanical Operation Without Cassette	4
1-14-1.	Threading Method Without Cassette	4
1-14-2.	Playback Method Without Cassette	4
1-14-3.	Setting Picture Recording Mode Without Cassette	4
1-15.	Unthreading, Unskating, and Ejecting when Power is Off	5
1-15-1.	Unthreading Method (I)	5
1-15-2.	Unthreading Method (II)	5
1-15-3.	Unskating and Ejecting Methods	6
1-16.	Tools and Fixtures Required for Servicing	7
2.	PERIODIC CHECK AND MAINTENANCE	
2-1.	Post-Repair Maintenance	8
2-1-1.	Cleaning of Rotating Head Disk Assembly	8
2-1-2.	Cleaning of the Tape Movement System	8
2-1-3.	Cleaning the Drive System	8
2-2.	Periodic Check Items	9
3.	CHECK, ADJUSTMENT, AND REPLACEMENT PROCEDURES	
3-1.	State of Wear of Video Heads Check	10
3-2.	Replacing Rotary Head Disk Assembly	11
3-2-1.	Removing Rotary Head Disk Assembly	11
3-2-2.	Refitting Rotary Head Disk Assembly	12
3-2-3.	Adjusting AFM Rotary Transformer Gap	13
3-3.	Replacing Upper Drum	13
3-3-1.	How to Remove Upper Drum	13
3-3-2.	How to Refit Upper Drum	14
3-3-3.	Centering Adjustment	14
3-4.	Caution when Changing Rotary Coupler Ass'y and Guide Arm Ass'y	14
3-5.	Video Head Dihedral Check and Adjustment	15
3-6.	Replacement and Adjustment of the Drum Assembly	16
3-6-1.	Replacement of the Drum Assembly	16
3-6-2.	Adjustment of the Motor Gap when Replacing the Drum Assembly	17
3-7.	Replacement of the Capstan Motor	17
3-7-1.	Removal of the Capstan Motor	17
3-7-2.	Capstan Shaft Verticality Adjustment	18
3-8.	Removal of the No.2 and No.3 Guides	19
3-8-1.	Removal of the No.2 Guide	19
3-8-2.	Removal of the No.3 Guide	19
3-9.	Replacement and Adjustment of the S Threading Ring	20
3-9-1.	Preparation to Remove the S Threading Ring, Removal of the ACE Assembly, FE Head	20
3-9-2.	Removal of the S Threading Ring	22
3-9-3.	S Threading Ring Mounting and Position Adjustment	23
3-10.	Removal and Adjustment of the Reel Block Assembly	24
3-10-1.	Removal of the Reel Block Assembly	24
3-10-2.	Removal and Refitting of the Tension Regulating Lever	24
3-10-3.	S Coil Sensor Harness Treatment and Operation Check	25
3-10-4.	Adjustment of the Position of Tension Regulating Lever	25
3-11.	Removal and Installation of LS Gear	26
3-11-1.	Removing LS Gear	26
3-11-2.	Refitting of the U/D Arm Assembly	27
3-11-3.	Adjusting of the Position of the LS Gear Assembly	27
3-11-4.	Installation of LS Gear Assembly	28
3-12.	Adjustment of the Forward Back Tension	29
4.	TAPE PATH ADJUSTMENT	
4-1.	Tracking Adjustment	30
4-1-1.	Preparation	31
4-1-2.	Entrance Side Adjustment	32
4-1-3.	Exit Side Adjustment	34
4-2.	Adjustment after Replacement of the ACE Assembly	35
4-2-1.	Tracking Adjustment	35
4-2-2.	Audio Head (ACE Assembly) Azimuth Adjustment	35
4-2-3.	CTL Head (ACE Assembly) Position Adjustment	36
4-2-4.	Audio Head (ACE Assembly) Height Adjustment	36
4-3.	Adjustment after Replacement of the Capstan Motor	37
4-4.	Thin Tape Movement Check Method During Tape Path Adjustment	38
4-5.	BETA Hi-Fi RF Output Waveform Check	38
5.	ELECTRICAL ADJUSTMENTS	
5-1.	Power Supply Check (CN Board (SR-21))	41
5-2.	System Control Check (SS-50 Board)	41
5-2-1.	Clock Frequency Check	41
5-2-2.	Charactor Generator Clock Frequency Check	41
5-3.	Servo System Adjustment	42
5-3-1.	Drum Servo System Adjustment	42
5-3-2.	Capstan Servo System Adjustment	43
5-4.	PAL Video System Adjustment	45
5-4-1.	Record System Adjustment	46
5-4-2.	Playback System Adjustment	50
5-5.	SECAM Video System Adjustment (ES Model)	53
5-6.	Audio System Adjustment	55
5-6-1.	Normal Audio System Adjustment (TA-36/37 Board)	55
5-6-2.	BETA Hi-Fi Audio System Adjustment (FL-8, AF-14 Boards)	56
5-7.	Tuner System Adjustment (TA-36/37 Board)	59

1. PREPARATION FOR MECHANICAL SECTION CHECK, ADJUSTMENT AND REPLACEMENT

The 11 items of the disassembly procedure mentioned below are detailed on the SL-HF950ES/E SERVICE MANUAL page 35 – 40.

1-1. DISASSEMBLY OF CABINET

1-2. REMOVAL OF THE TA-36/37 BOARD

1-3. REMOVAL OF THE SS-50 BOARD

1-4. REMOVAL OF THE YC-40 BOARD

1-5. REMOVAL OF THE FR-20 BOARD

1-6. REMOVAL OF THE FL-8, FL-9 BOARDS

1-7. REMOVAL OF THE RP-31 BOARD

1-8. REMOVAL OF THE POWER BLOCK

1-9. REMOVAL OF THE REEL BLOCK ASSEMBLY

1-10. REMOVAL OF THE LS BLOCK ASSEMBLY (1)

1-11. REMOVAL OF THE LS BLOCK ASSEMBLY (2)

1-12. REMOVAL OF THE UPPER STAY AND THE DRUM COVER

1) Remove two screws (BVTP3 x 6) ❶ and then remove drum cover ❹.
2) Push both claws ❸ outward, and remove drum cover ❹ in the arrow Ⓐ direction.

Note:

When drum cover ❹ is installed, make sure to tilt protector ❺ backward until it comes under drum cover ❹.

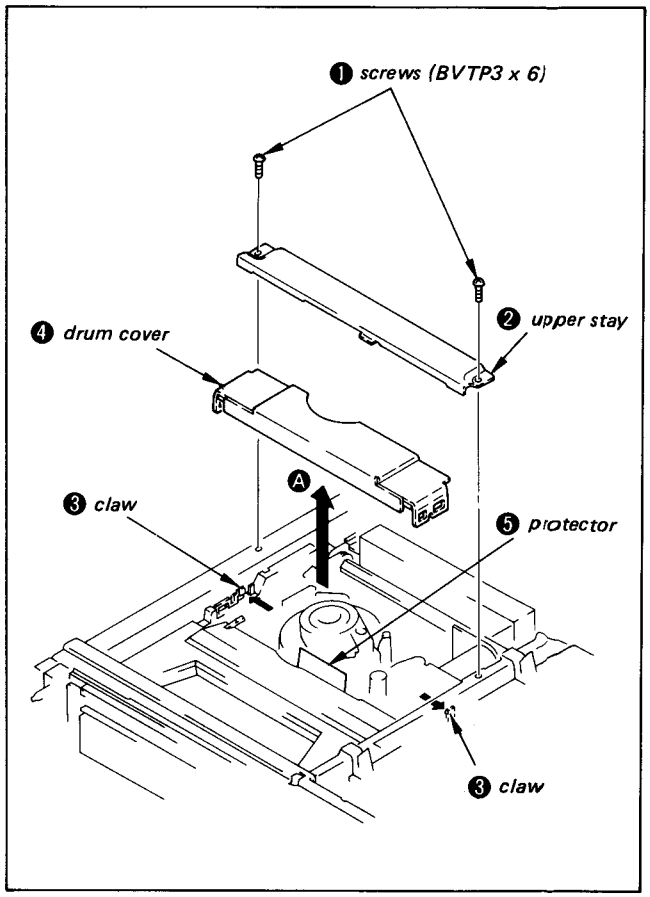

Fig. 1-1

1-13. REMOVAL OF THE TRAY COVER AND THE TRAY M COVER

1) Eject the lid by pressing EJECT button or using the procedure of 1-15-3.
2) Remove tray cover ❶ upward by bending its both side outward.
3) Remove tray M cover ❷ downward by bending its both side outward.

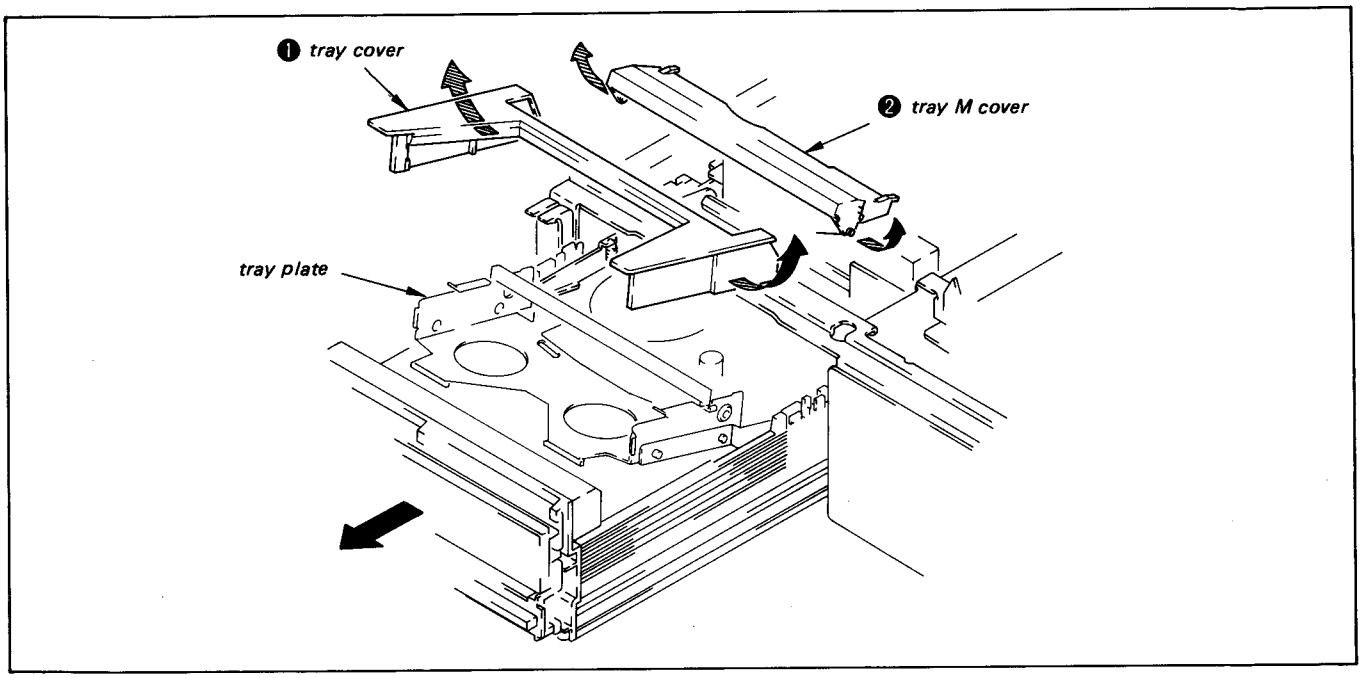

Fig. 1-2

1-14. MECHANICAL OPERATION WITHOUT CASSETTE

1-14-1. Threading Method Without Cassette

1) Turn POWER switch on.
2) Press the cassette down switch ❶ to on. Then, threading occurs.

1-14-2. Playback Method Without Cassette

Complete the threading with the procedure of 1-14-1, then press the playback button.

1-14-3. Setting Picture Recording Mode Without Cassette

Complete the threading with the procedure of 1-14-1, then press the accidental erasure prevention switch ❷, followed by the picture-recording button.

Note:

If the picture-recording button is pressed without pressing the accidental erasure prevention switch ❷, unthreading occurs, and the lid is ejected.

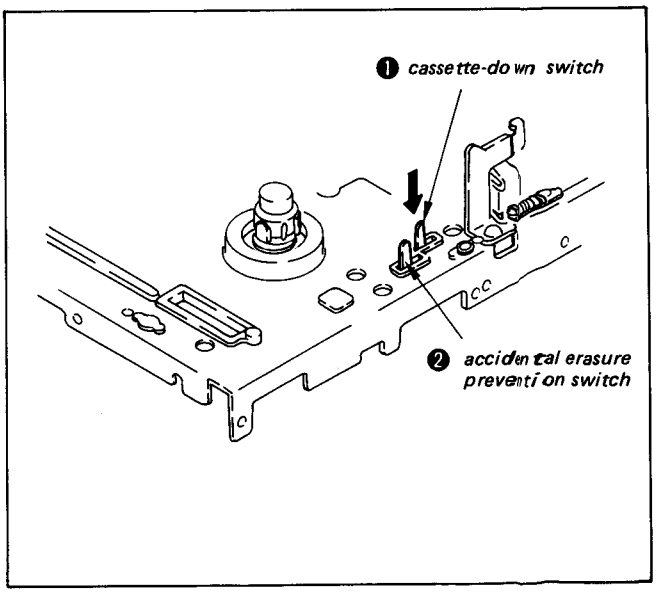

Fig. 1-3

1-15. UNTHREADING, UNSKATING, AND EJECTING WHEN POWER IS OFF

1-15-1. Unthreading Method (I)

From the stabilized DC power supply, apply 7 to 10 V in the polarity reverse to the silk-screened +/– indication (as shown Fig. 1-4) to the legs of the L motor on the LM-17 board.

If the voltage is applied in the same polarity as the silk-screened +/– indication, threading occurs.

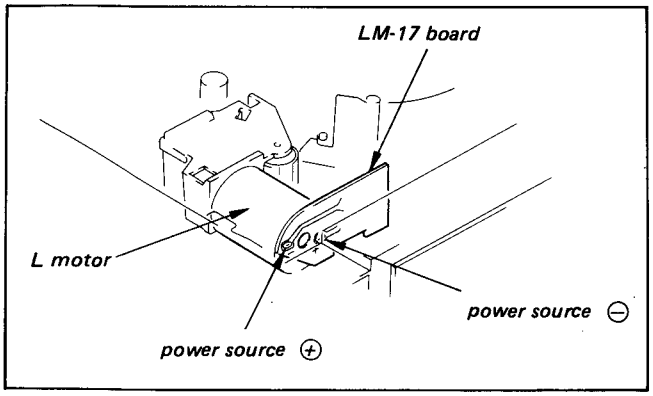

Fig. 1-4

1-15-2. Unthreading Method (II)

1) Remove screw (PTP2.6 x 8) ❶ and remove L motor assembly ❷ upward (Fig. 1-5).
2) Push arm lock ❸ in arrow Ⓐ direction, and release the lock (Fig. 1-6).
3) Turn gear ❹ of the gear chassis block assembly clockwise (Fig. 1-6).
   When gear ❹ is turned counterclockwise, threading occurs.

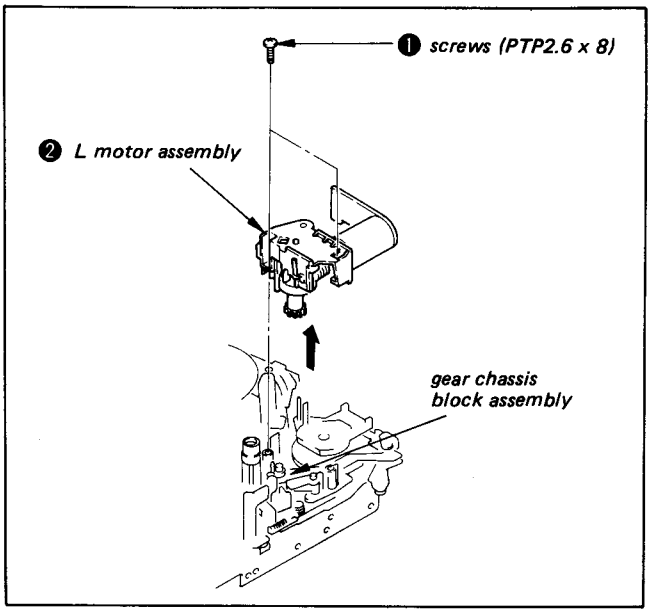

Fig. 1-5

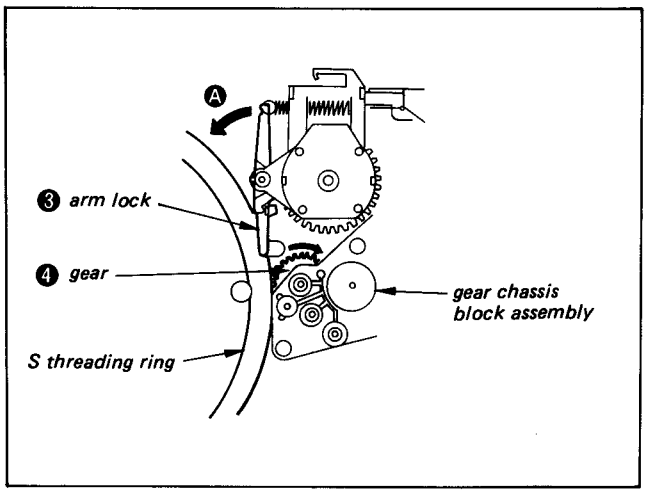

Fig. 1-6

1-15-3. Unskating and Ejecting Methods

1) Complete the threading with the procedure of 1-15-1 or 1-15-2.
2) Slowly pull LS assembly ❶ in arrow Ⓐ direction with the hand, until the lefthand stopper functions.
3) Slowly lift tray ❷ in arrow Ⓑ direction with the hand.

Note:

Complete the unthreading, because if insufficient, the righthand eject stopper functions, and the LS assembly cannot fully be pulled out.

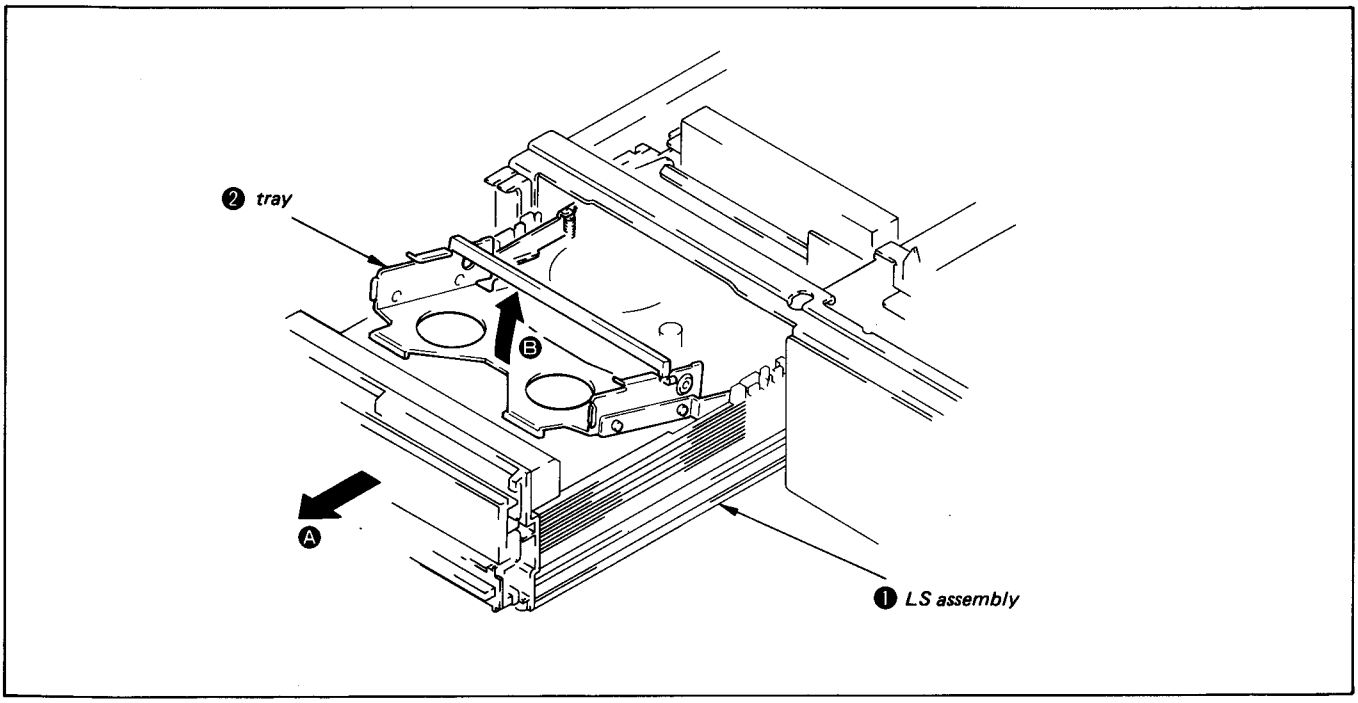

Fig. 1-7

1-16. TOOLS AND FIXTURES REQUIRED FOR SERVICING

Ref. No.	Name	Part Code	Carved Jig No.	Use and Remarks
J-1	Torque Measurement Tape	J-6080-003-C	SL-0003C	forward torque and back tension measurement
J-2	Parallel Plate	J-6086-750-A	SL-0657	audio/CTL head lateral adjustment capstan shaft vertical adjustment
J-3	Dental Mirror (handle) Dental Mirror (mirror)	J-6080-029-A J-6080-030-1	SL-5052	tape path and tape traveling adjustment check
J-4	Alignment Tape (KR5-2H)	8-969-995-52	———	tracking, overall adjustment of picture quality, etc.
	Alignment Tape (KR5-10C)	8-192-508-01		
J-5	Cleaning Fluid	Y-2031-001-0	———	
J-6	Thickness Gauge	9-911-053-00	———	
J-7	Chamois Cloth	2-034-697-00	———	cleaning
J-8	Head Demagnetizer	widely available	———	demagnetization of video head and audio head
J-9	Cleaning Cassette Tape	8-888-004-00	———	video head cleaning
J-10	Dihedral Adjustment Screw	J-6080-013-A	SL-0013	video dihedral adjustment
J-11	Video Head Checker	7-732-080-01	SL-5151	video head check

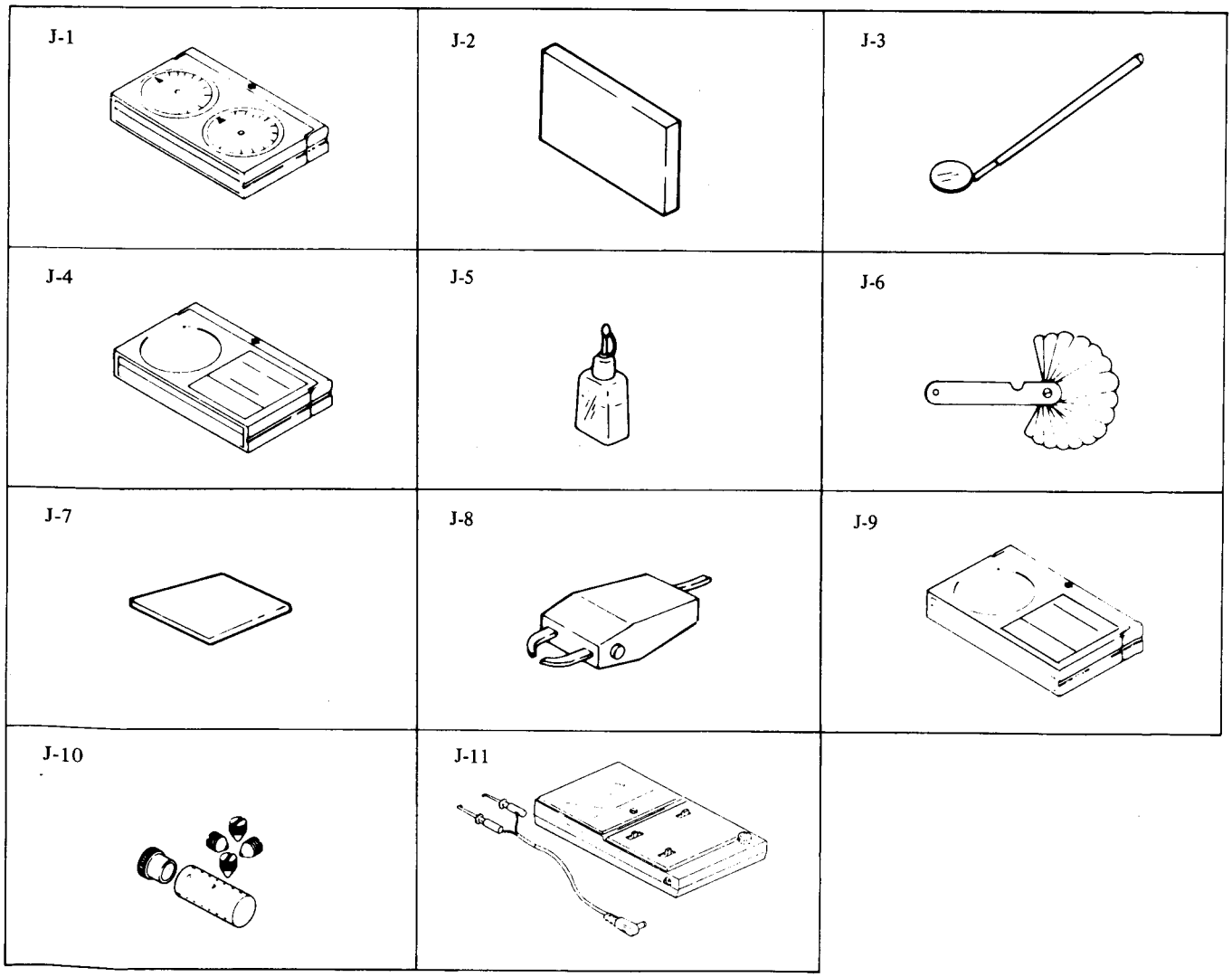

Fig. 1-8 Tools and fixtures required for servicing

2. PERIODIC CHECK AND MAINTENANCE

In order to obtain the best performance from this unit and make full use of its capabilities, and to extend the life of the unit and tapes, it is recommended that the following periodic checks and maintenance be performed.

2-1. POST-REPAIR MAINTENANCE

The following must be done after every repair regardless of how many hours the user has operated the machine.

2-1-1. Cleaning of Rotating Head Disk Assembly

1) Press a chamois cloth (Jig Ref. No. J-7) which has been dipped in cleaning fluid (Jig Ref. No. J-5) lightly against the rotating drum assembly, then do the cleaning by slowly rotating the rotating head disk by hand. (Never try to clean by using the motor to turn it.)
2) Never try to clean by moving the chamois cloth at a right angle to the head tip. There is a very great danger of damaging the head tip if this is done.

2-1-2. Cleaning of the Tape Movement System

1) Clean the surfaces which the tape contacts during its movement (tape guide, drum assembly surface, capstan, pinch roller, etc.) with a chamois cloth that has been dipped in in cleaning fluid.

2-1-3. Cleaning the Drive System

1) Clean the driving parts with a cloth that has been dipped in cleaning fluid.

parts requiring cleaning

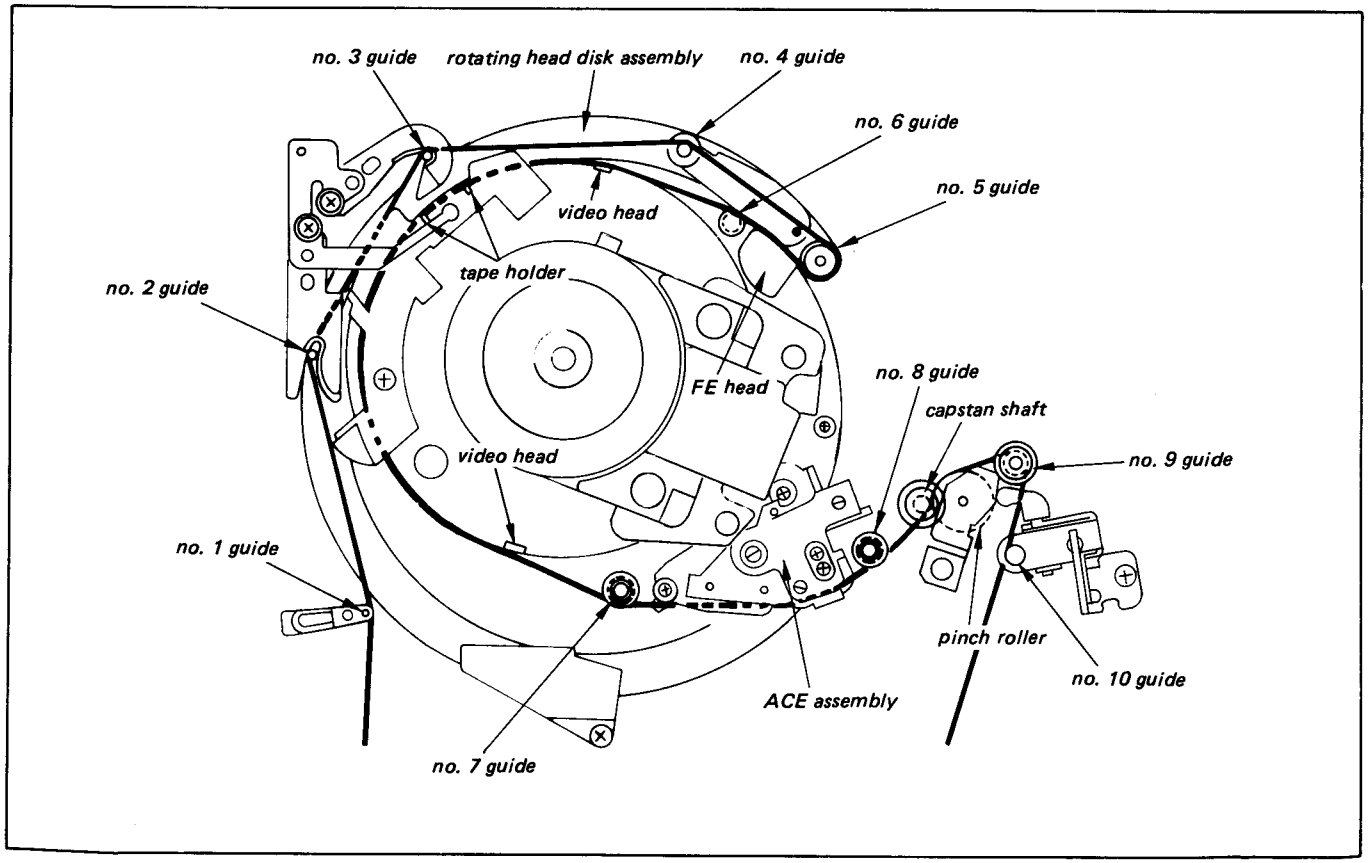

Fig. 2-1 Parts requiring cleaning

2-2. PERIODIC CHECK ITEMS

Perform the maintenance and check listed on the table below, accoring to user's operating hours.

	Maintenance & Check	Operating Hours (H) / Repalcement Part No.	500	1,000	1,500	2,000	2,500	3,000	3,500	4,000	4,500	5,000	Remarks
Tape Trans Portation System	Cleaning of tape transportation system	——	○	○	○	○	○	○	○	○	○	○	This cleaning must be done whenever a repair is made.
	Cleaning and degaussing of ACE ass'y	——	○	○	○	○	○	○	○	○	○	○	
	Cleaning & degaussing of video disk ass'y	——	○	○	○	○	○	○	○	○	○	○	The life of the head varies, depending on operational conditions and method.
Performance Confirmation	Abnormal sound		☆	☆	☆	☆	☆	☆	☆	☆	☆	☆	Adjust or replace the section which causes abnormal sound.
	Measurement of FWD back tension		–	☆	–	☆	–	☆	–	☆	–	☆	Confirmation must be made according to 3-12. Specified value: adjust to 44 ±4 g·cm (When measured with torque cassette tape.)
	Confirmation of brake system		–	☆	–	☆	–	☆	–	☆	–	☆	
	Confirmation of record & playback functions		☆	☆	☆	☆	☆	☆	☆	☆	☆	☆	Perform the confirmation whenever repair is made.
	Confirmation of forward torque		☆	☆	☆	☆	☆	☆	☆	☆	☆	☆	45 – 90 g·cm (SL-0003C)

○ Cleaning ★ Replacement ☆ Confirmation

Note:
On overhaul
When overhauling the unit, replace parts as indicated in the above table.

3. CHECK, ADJUSTMENT, AND REPLACEMENT PROCEDURES

3-1. STATE OF WEAR OF VIDEO HEADS CHECK

As the accuracy of the check depends on the state of the heads and precision of the checker, the results should be taken only as an indication of the state of wear.

[Adjustment of video head checker]

1) Mechanical zero
   Verify that the pointer of the video head checker is at the mechanical zero position. If it is not at this position, adjust the mechanical zero control.
2) Battery voltage check
   Set the MODE switch to "BATT" and set the POWER switch to "ON". The deflection of the pointer should be within the range marked "BATT". If not, replace the battery (use a 6F22 battery) as follows.
3) Calibration check
   Set the POWER switch to "ON" and the MODE switch to "CAL", then adjust the CAL control so that the pointer is on the CAL mark.

   Note 1: Be sure to carry out this adjustment whenever the RANGE switch is changed.

   Note 2: Be sure to check CAL before measuring the head and proceed the measurement after adjusting CAL, if CAL is not properly set.

[Method of measurement]

1) Remove the two screws (+PTPWH2) ① that hold the tape guide ground plate in place, then remove the tape guide ground plate.
2) Remove the two screws (P2 x 3) ② that hold the damper assembly in place, then remove the damper assembly.
3) Remove the hexagonal socket head bolt (3 x 8) ③ using a hexagonal wrench (2.5 mm) and the two screws (P3 x 8) ④. Then remove the upper drum assembly.
4) Unsolder the four connection pins ⑤ for the two AFM (AUDIO) heads from the rotary coupler assembly.
5) Remove the two hexagonal socket head bolts (2.6 x 8) ⑥ that hold the rotary coupler assembly in place using a hexagonal wrench (2.0 mm), then remove the rotary coupler assembly.

   Note: Be sure to check the positions of the two AFM (AUDIO) heads for A-CH and B-CH before refitting the rotary coupler assembly.

   On the disk assembly, "A"and "B" are marked, and on the rotary coupler assembly, "a" and "b" are marked. Fit and solder the rotary coupler assembly metching a for A, b for B.
6) Unsolder the six lead wires and two connection pins for the four video heads. (Don't care that unsolder only one lead wire for each four video heads.)
7) Attach the measuring clips to the head leads.
   Be sure to separated the leads by at least 1.5 cm.
8) Set RANGE switch to "A" and MODE switch to "MEAS". The pointer will deflect to indicate the state of wear of the heads.

   Note: The deflection for the 4 video heads may be different, so be sure to measure both.

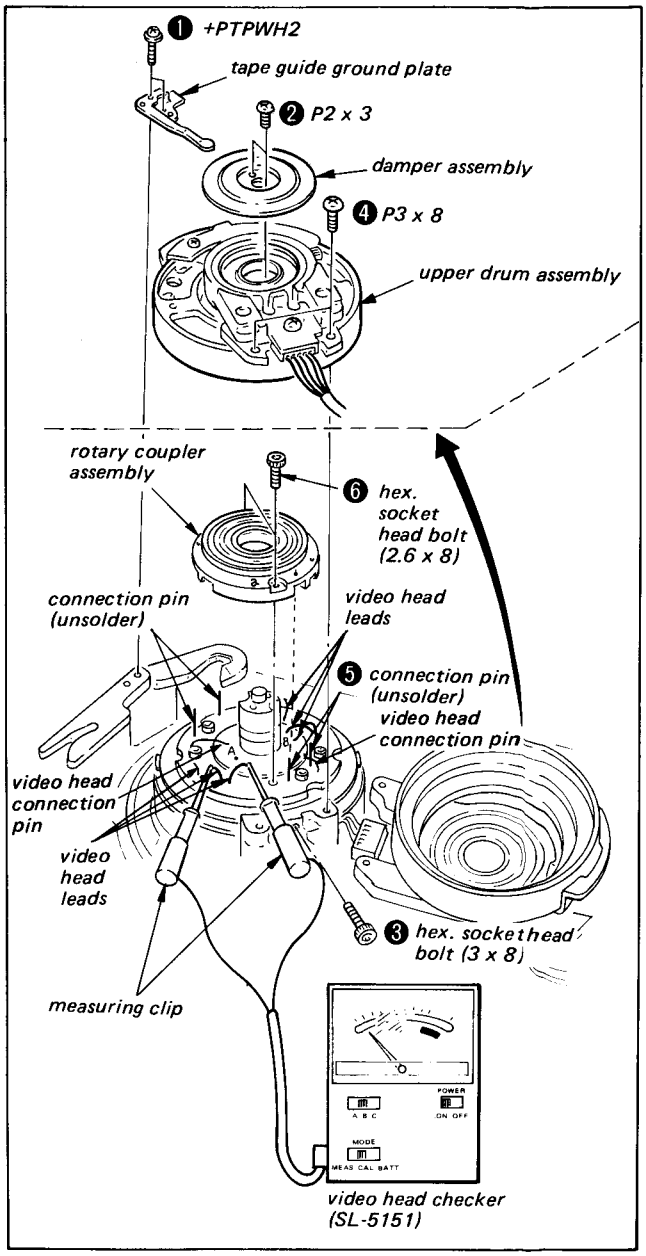

Fig. 3-1

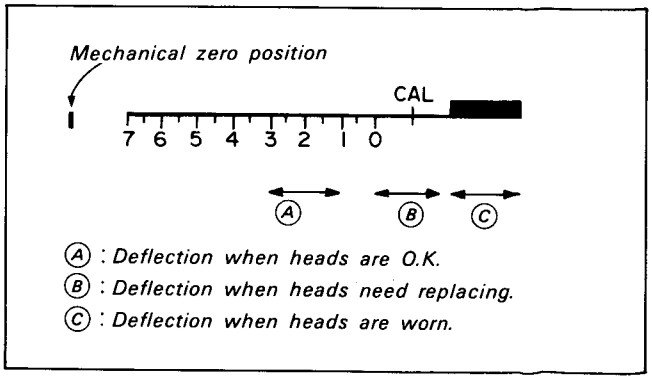

Fig. 3-2 Measured value

3-2. REPLACING ROTARY HEAD DISK ASSEMBLY

Accessory adjusting jig: Feeler gauge 1, feeler gauge 2

Note:

Keep them after replacing the rotary head disk, since they will be needed when replacing the guide arm assembly and the rotary coupler assembly. (They are not delivered with the guide arm assembly or the rotary coupler assembly.)

3-2-1. Removing Rotary Head Disk Assembly (See Fig. 3-3)

Note:

While removing the rotary head disk assembly, never move screws ❽ clamping the guide arm assembly. If they are moved, a centering adjustment will be required later. (Refer to Paragraph 3-3-3.)

1) Unscrew two screws ❶ clamping the damper assembly, and remove the damper assembly.
2) Unscrew hex. socket head bolt ❷ with an Allen wrench.
3) Unscrew two screws ❸ , and remove the upper drum assembly.

Note:

Remove while turning the upper drum assembly, taking care not to move the adjust plate. If the adjust plate is moved, the tape pass is badly influenced (See Fig. 3-13).

4) Unsolder the four connection pins ❹ from the coupler disk.
5) Unscrew two hex. socket head bolts ❺ , and remove the rotary coupler assembly.

Note:

To be able to refit the rotary coupler in the correct relative position, memorize the position relative to connection pins 4 .

6) Unsolder the red, white, blue and black leads at six positions, and unsolder the two connection pins ❻ from the intermediary board of the rotary head disk.
7) Unscrew four hex. socket head bolts with washers ❼, and remove the rotary head disk assembly.

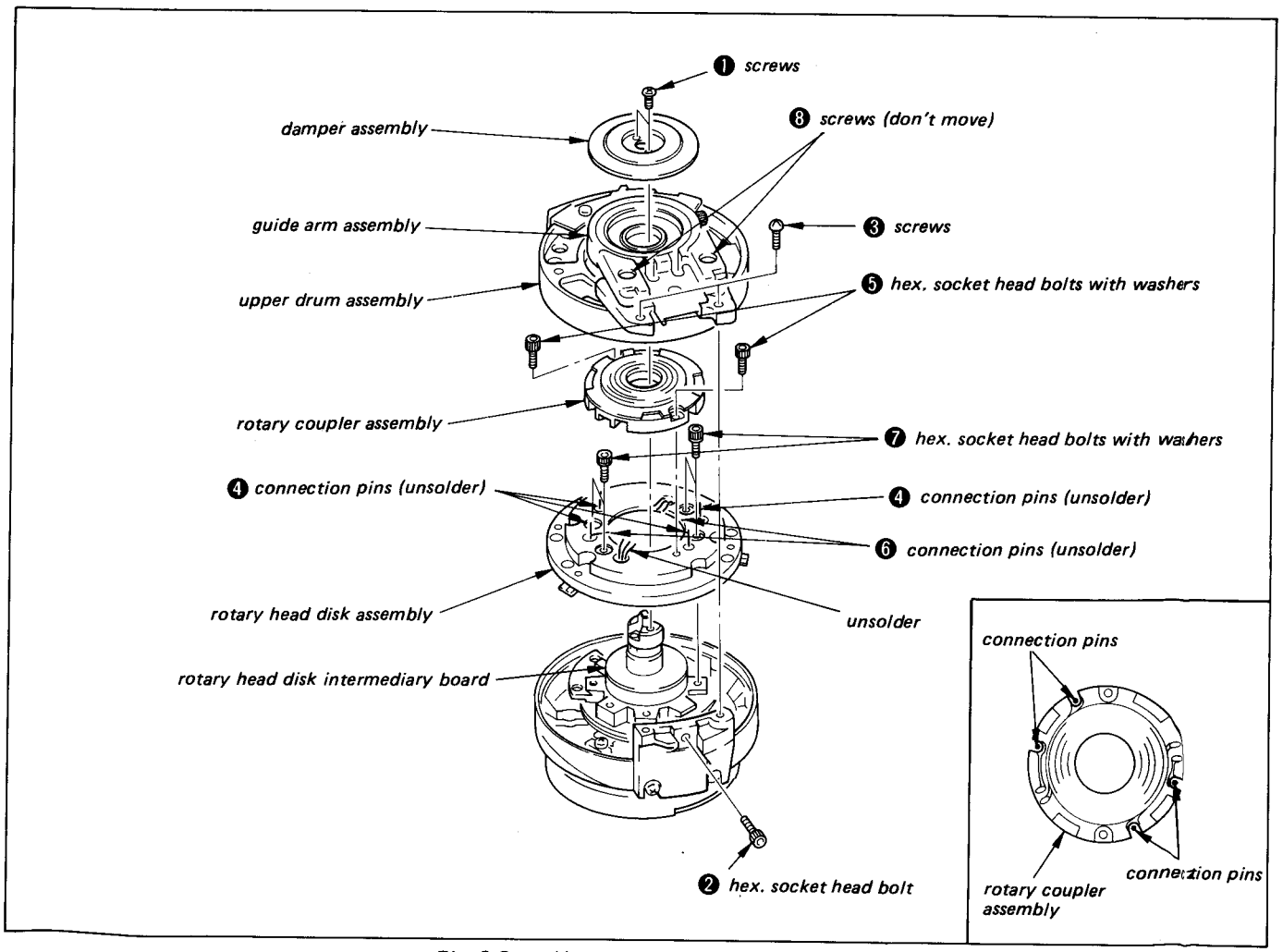

Fig. 3-3 How to remove rotary head disk

3-2-2. Refitting Rotary Head Disk Assembly

Note:

Be extremely careful not to damage the head chip by touching or fouling it.

1) Solder the six leads to the video head of the rotary head disk assembly. (Caution on correct orientation of the magnet.) Thread the leads through the holes (See Fig. 3-4).
2) Refit the four connection pins to the rotary head disk assembly (See Fig. 3-5).
3) Bend the connection pins and solder them to the AFM heads (See Fig. 3-5).
   Bend one connection pin for each AFM heads.
4) Refit the rotary head disk assembly, paying attention to the positions of the red, white, blue and black leads, and to the orientation of the connection pins. (White on Ach side.)
5) Tighten four hex. socket head bolts ❼ (see Fig. 3-3), and solder the leads to the head intermediary board of rotary head disk (See Fig. 3-6-a).
6) Refit the rotary coupler assembly, and tighten two hex. socket head bolts ❺ (See Fig. 3-3).
7) Solder the four connection pins to the rotary coupler assembly (See Fig. 3-6-b).
8) Refit the upper drum assembly without moving the adjust plate, and lightly tighten screws ❸ . Tighten hex. socket head bolt ❷ , and then, tighten screws ❸ firmly (See Fig. 3-3).

   Note:

   While refitting the upper drum assembly, take care not to foul the head chip.
9) Check the AFM rotary transformer gap with the feeler gauges (See Fig. 3-7). Feeler 1 must go in and feeler 2 must not go in. If the gap is incorrect, readjust the gap. (Refer to Paragraph 3-2-3).
10) Refit the damper assembly, and tighten screw ❶ (See Fig. 3-3).

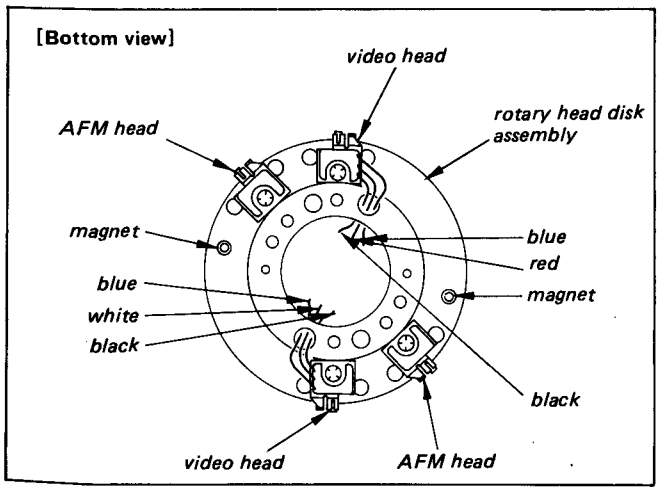

Fig. 3-4 How to refit rotary head disk (1)

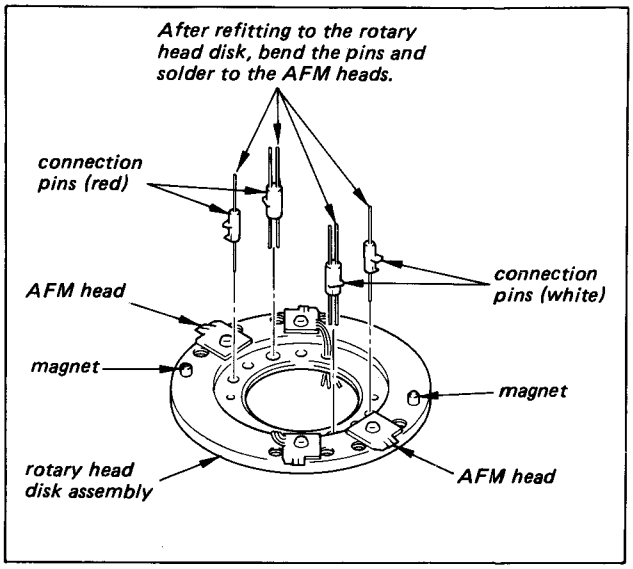

Fig. 3-5 How to refit rotary head disk (2)

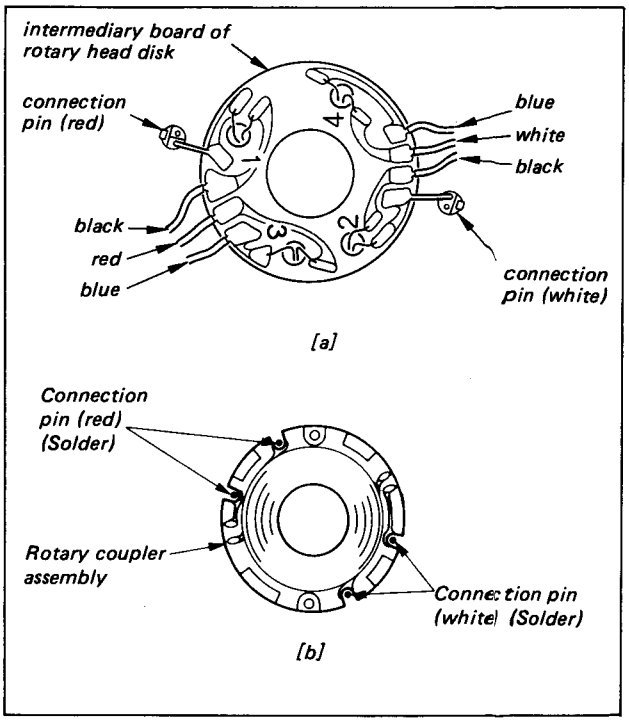

Fig. 3-6 How to refit rotary head disk (3)

3-2-3. Adjusting AFM Rotary Transformer Gap (See Fig. 3-7)

1) Loosen hex. socket head bolt ❶ for the guide arm assembly without unscrewing, and lift the upper ring assembly slightly.
2) Insert feeler gauge 1 into the gap in the rotary transformer, and push the upper ring assembly downward.
   Note: Take care not to tilt the upper ring assembly.
3) Tighten the hex. socket head bolt ❶ while holding the upper ring assembly down.
   Note:
   Take care not to move the upper ring assembly while tightening the bolt.
4) Remove feeler gauge 1, and ascertain that feeler gauge 2 does not enter the gap. If it enters, start readjusting from process 1) on.

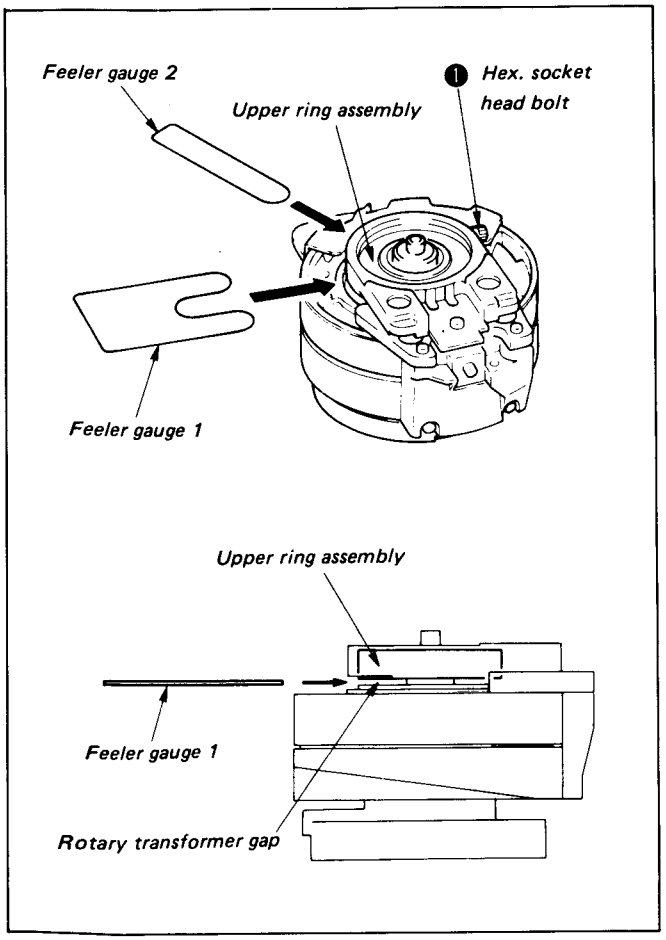

Fig. 3-7 Adjusting AFM rotary transformer gap

3-3. REPLACING UPPER DRUM

Accessory adjusting jig: Centering jig

Note:

Keep it carafully after replacing the upper drum, as it will be used again when replacing the guide arm assembly. (It does not accompany the guide arm assembly.)

3-3-1. How to Remove Upper Drum (See Fig. 3-8)

Note:

While removing the upper drum, never move hex. socket head bolt ❼. If it is moved, the gap in the rotary transformer must be adjusted later. (Refer to Paragraph 3-2-3.)

1) Unscrew two screws ❶ and remove the damper assembly.
2) Unscrew two screws ❷ , and remove the guide arm assembly.
3) Unscrew hex. socket head bolt ❸ with an Allen key.
4) Unscrew two screws ❹ , and remove the upper drum together with the upper drum mounting plate.
   Note:
   Be extremely careful not to touch parts around the drum.
5) Unscrew two screws ❺ , and remove the upper drum mounting plate from the upper drum.
6) Unscrew two screws ❻ , and remove the tape retainer spring assembly.

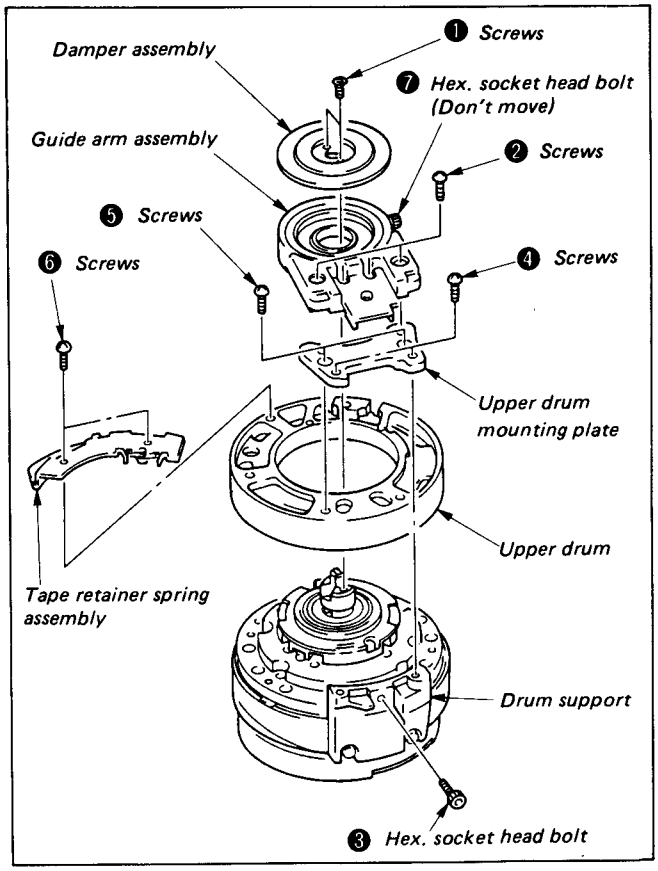

Fig. 3-8 How to remove upper drum

3-3-2. How to Refit Upper Drum (See Fig. 3-8)

1) Fit the tape retainer spring assembly to the replacement upper drum with two screws ❻.
2) Refit the upper drum mounting plate with two screws ❺.
3) Lightly clamp the upper drum mounting plate installed to the upper drum to the drum support with two screws ❹.
4) Tighten hex. socket head bolt ❸ while holding the upper drum and the upper drum mounting plate tightly onto the drum support by hand.
5) Firmly tighten two screws ❹.
6) Refit the guide arm assembly with two screws ❷.
   Note:
   Don't firmly tighten screws 2, but allow the guide arm assembly to move horizontally.
7) Insert the centering jig found in the box of the replacement upper drum between the guide arm assembly and the damper holder, and tighten screws ❷ firmly. Remove the centering jig, and check the clearance between the guide arm assembly and the damper holder for uniform distribution (See Fig. 3-8, 3-9).
8) Refit the damper assembly with two screws ❶.

3-3-3. Centering Adjustment (See Fig. 3-9)

1) Loosen the screw ❷ fastening the guide arm assy without removing the screw, enabling the guide arm assy to move horizontally.
2) Insert the centering jig supplied as an accessory in the gap between the guide arm assy and damper holder on the change upper drum.
3) Tighten the screw ❷ holding the centering jig.
4) Remove the centering jig and check that the gap between the guide arm assy and damper holder is uniform. Readjust starting 1) if the gap is not even.

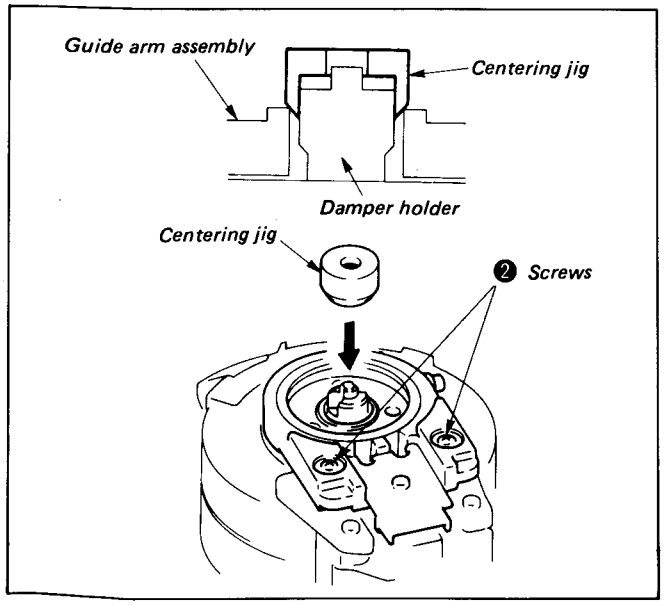

Fig. 3-9 Centering adjustment

3-4. CAUTION WHEN CHANGING ROTARY COUPLER ASSY AND GUIDE ARM ASSY

1) Make sure to adjust the gap (refer to Paragraph 3-2-3) after changing the rotary coupler assy.
   The adjust jigs (spacers 1 and 2) can be found with the rotary head disk assy for repair (A-6762-226-A).
2) Make sure to adjust centering (refer to Paragraph 3-3-3) and gap (refer to Paragraph 3-2-3) after changing the guide arm assy.
   The adjust jigs (centering jig, feeler gauge 1 and 2) can be found with the upper drum for repair (A-6760-178-A) and rotary head disk assy for repair (A-6762-226-A). (Refer to Section 1-9)

3-5. VIDEO HEAD DIHEDRAL CHECK AND ADJUSTMENT

This adjustment is generally unnecessary, but it is sometimes necessary when the video head disk is replaced. (The video head disk used for maintenance has been precision adjusted at the factory using a microscope and almost never needs to be readjusted.)

When judging whether the video head dihedral angle is correct, the alignment tape is played back. When this is done the tracking control knob must be in the centering position. If the check is done with this knob in other than the center click position (if the tracking is off-center), even if the dihedral angle is correct the picture will be reproduced as if it were off.

Before this adjustment is performed, the ACE assembly position adjustment (refer to the section where the tape path adjustment is described) must be completed.

[Method of checking]

With the tracking control knob set to the center click position, play back the monoscope section of the alignment tape. Check to see if any of the vertical monoscope lines immediately below the switching pulse are reproduced double. If not, the dihedral angle is correct and does not have to be adjustment. If so, perform the adjustment as explained below.

[Adjusting method]

1) Insert the two dihedral adjusting screws (Jig Ref. No. J-10) into the adjusting screw holes on both sides of the video head –Ach (see Fig. 3-11) so that the tops of the adjusting screws flush with the upper face of the video head disk as shown in Fig. 3-10. (If screwing in is not sufficient, the video head disk does not rotate as the heads of the adjusting screws ram the upper drum. Conversely, if screwed in more than necessary, the head base is moved, and video head dihedral adjustment becomes very inaccurate.)

   Note:

   Be most careful the head under the part on the coupler board that is marked with white silk is the video head –Ach. The side marked b with white silk is the reference side. Never move it. (See Fig. 3-11.)

2) Of the two adjusting screws, screw in farther either one of them until resistance is felt. Screwing in the screw farther, the video head moves, and dihedral adjustment can be made. (See Fig. 3-12)
3) Play back the monoscope signal part of the alignment tape with the adjusting screw on and check the signal. Rotate the screwed in adjusting screw counterclockwise to loosen it, then screw in the adjusting screw on the other side if the dihedral quantity of the vertical line has become larger than before making the adjustment.
4) Remove the adjusting screws and recheck after completing the adjustment.

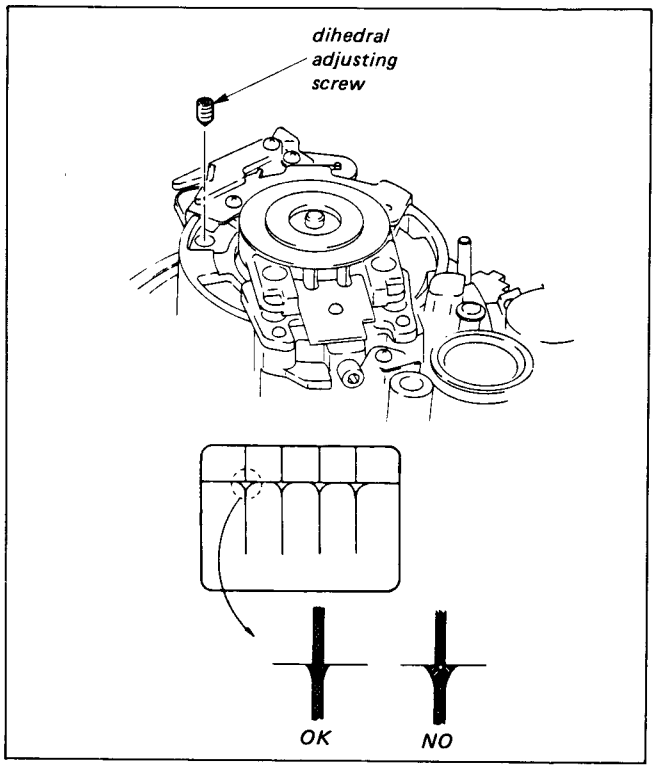

Fig. 3-10 Video head dihedral adjustment (1)

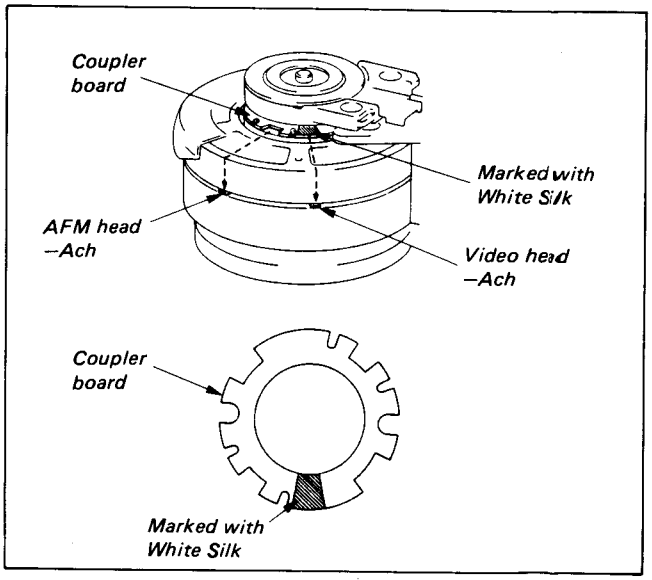

Fig. 3-11 Video head dihedral adjustment (2)

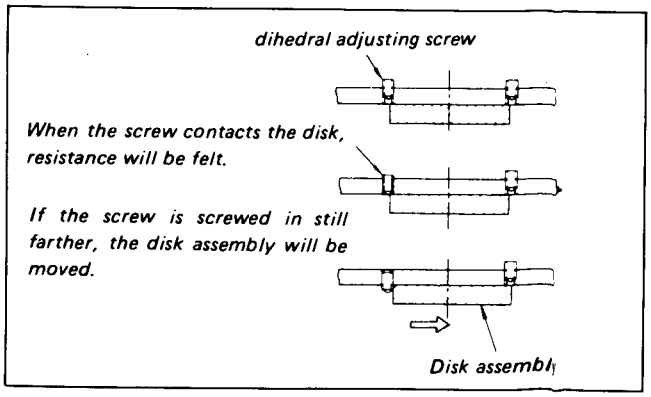

Fig. 3-12 Video head dihedral adjustment (3)

3-6. REPLACEMENT AND ADJUSTMENT OF THE DRUM ASSEMBLY

3-6-1. Replacement of the Drum Assembly

1) Measure gap Ⓐ between adjusting plate 2 ❶ and the upperdrum holder section and record the measurement.
Note:
The position where the adjusting plate is mounted has a large effect on the tape path, so this measurement must be performed.

2) Measure gap Ⓑ between adjusting plate 3-1 ❷ and the upper drum holder section, and record the measurement.
Note:
The position where the adjusting plate is mounted has a large effect on the tape path, so this measurement must be performed.

3) Remove the screws ❸ shown in Fig. 3-13, then remove the tape guide ground plate and adjusting plates 2 and 3-1.

4) Remove the 3 connectors ❹ from the rear of the chassis as shown in Fig. 3-14.

5) Remove the 3 drum mounting screws ❺ from the rear of the chassis, then remove the main body of the drum assembly. After the replacement has been completed, adjust the drum path.

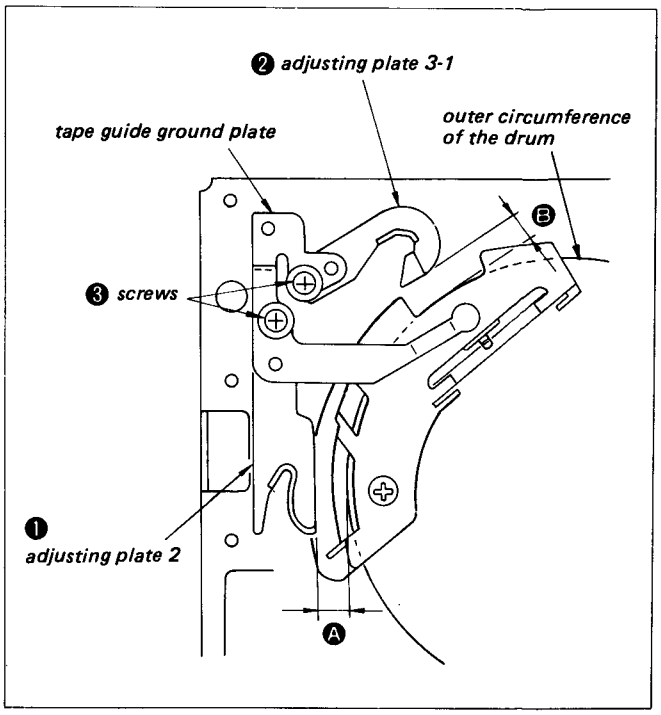

Fig. 3-13 Measurement of the position of adjusting plates 2 and 3-1

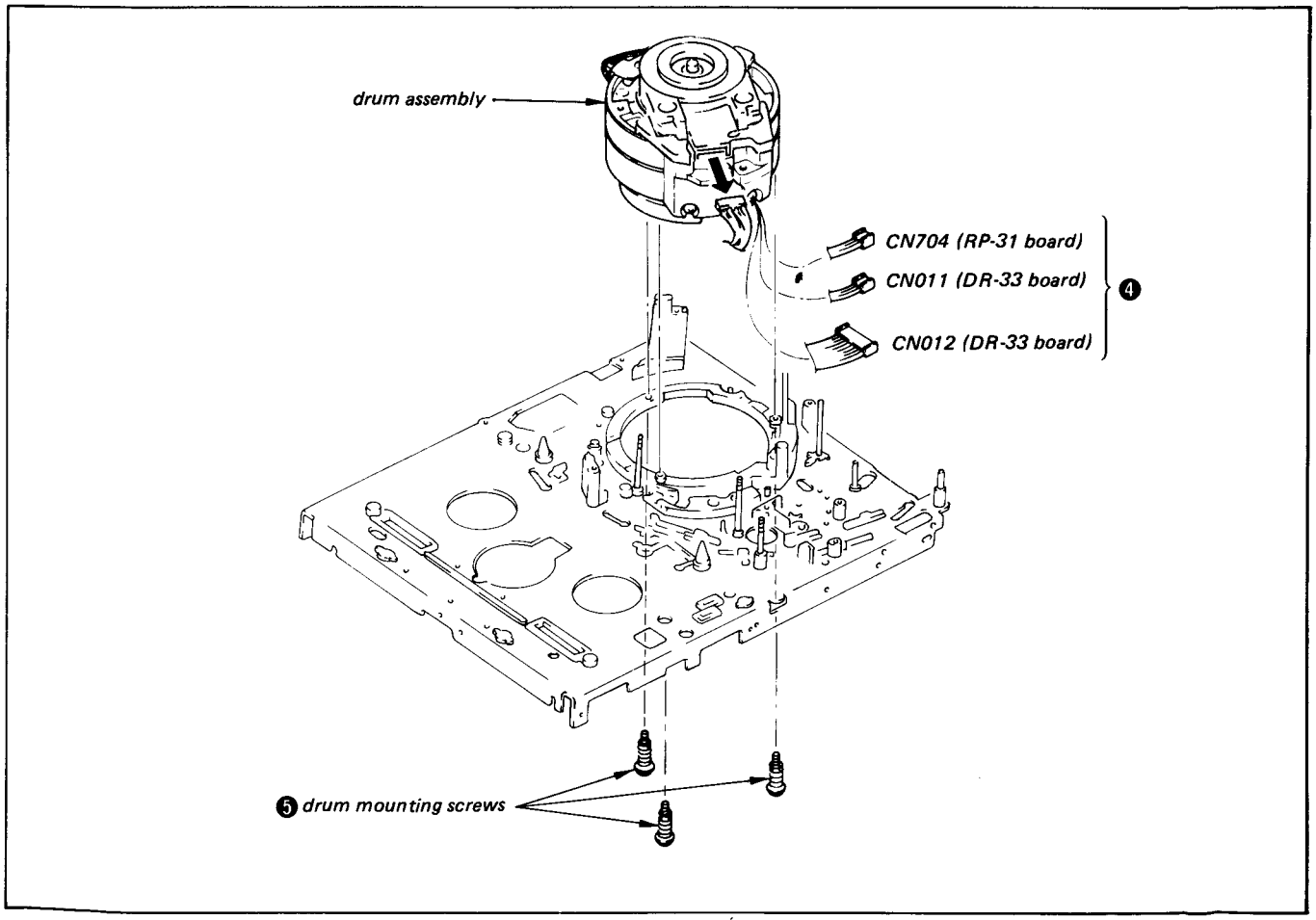

Fig. 3-14 Removal of the drum assembly

3-6-2. Adjustment of the Motor Gap when Replacing the Drum Assembly

After replacing the drum assembly, adjust the gap between the motor rotor and the coil to 0.3 mm to 0.6 mm (Fig. 3-15).

[Procedure]

1) When re-assembling the drum, use the spacers which were removed to produce a gap of between 0.3 mm and 0.6 mm. Measure the gap using the gauge. If the gap is adjusted correctly, the 0.3 mm side should fit in and the 0.6 mm side should not.
2) If this fails to give the correct gap width, do not use the spacers which were removed; instead, use a combination of the 4 0.3 mm accessory spacers to obtain the correct width.

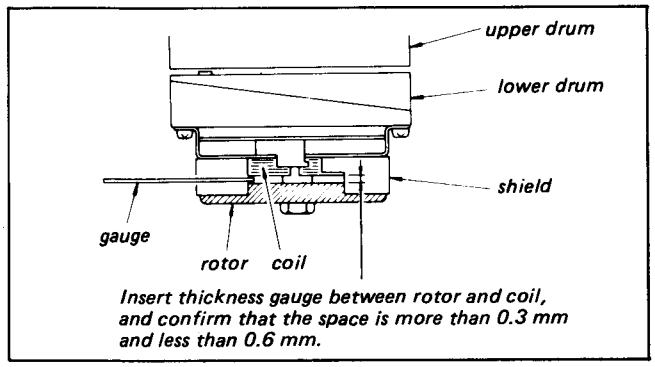

Fig. 3-15 Checking the motor gap width after replacing the drum assembly

Removal of the stator and rotor when replacing the drum

1) Remove the nut ❶ and washer ❷.
2) Remove the rotor ❸ from the stator ❹.
3) Remove the ❷ screws ❺, then remove the stator from the main body of the drum.

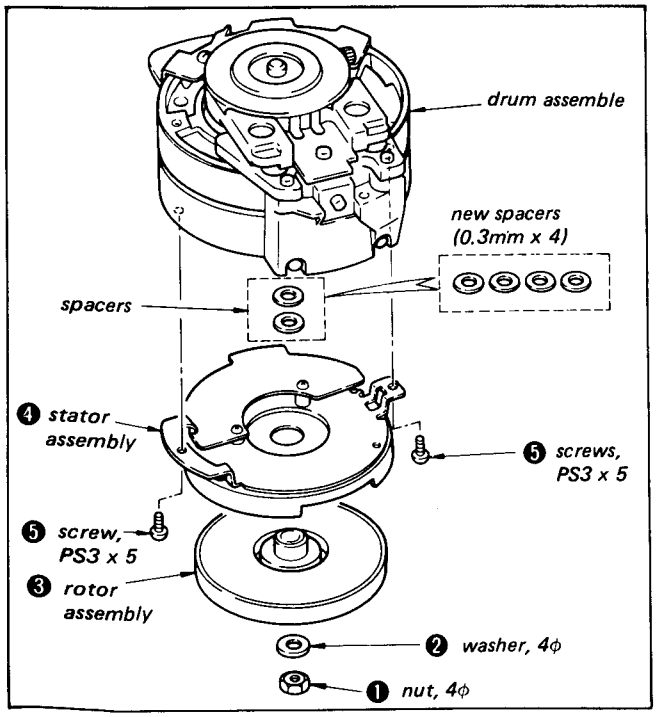

Fig. 3-16 Removal of the stator and rotor when replacing the drum

3-7. REPLACEMENT OF THE CAPSTAN MOTOR

3-7-1. Removal of the Capstan Motor (Fig. 3-17)

1) Remove the two screws (+PW2 x 6) ❶ and the screw (+P2.6 x 5) ❷.
2) Remove the capstan motor ❸ from the rear of the mechanical chassis.

Note:

When the capstan motor has been removed or replaced, check the tape path once.

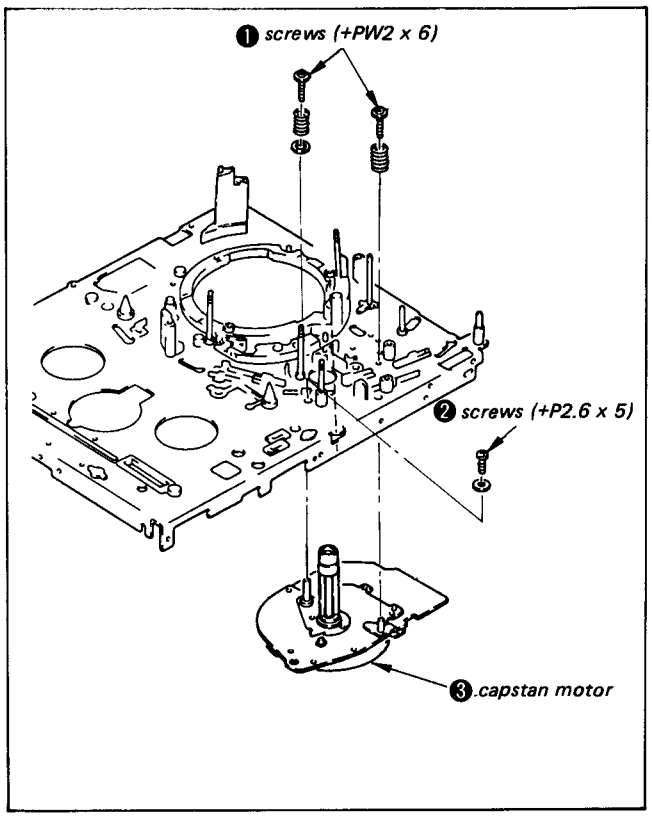

Fig. 3-17 Removal of the capstan motor

3-7-2. Capstan Shaft Verticality Adjustment

When the capstan motor has been replaced or removed, be sure to make the following adjustment.

1) Loosen clamping screws Ⓑ and Ⓒ.
2) Apply jig (J-2) vertically to the capstan motor shaft and the no. 8 guide sleeve, as shown in Fig. 3-10.
3) Turn adjust screw Ⓐ until the capstan motor shaft becomes vertical.
4) Apply the jig to the capstan motor shaft and the no. 10 guide shaft of the pinch arm assembly in the vertical attitude as shown in Fig. 3-11.
5) Turn adjust screw Ⓒ until the capstan motor shaft becomes vertical, and clamp the capstan motor.
6) Apply the jig again as shown in Fig. 3-10, and check the verticality of the capstan motor shaft. If it is not accurately vertical, repeat the processes from 3).
7) Tighten clamping screw Ⓑ to clamp the capstan motor.
8) Make adjustment following the described tape path adjustment processes.

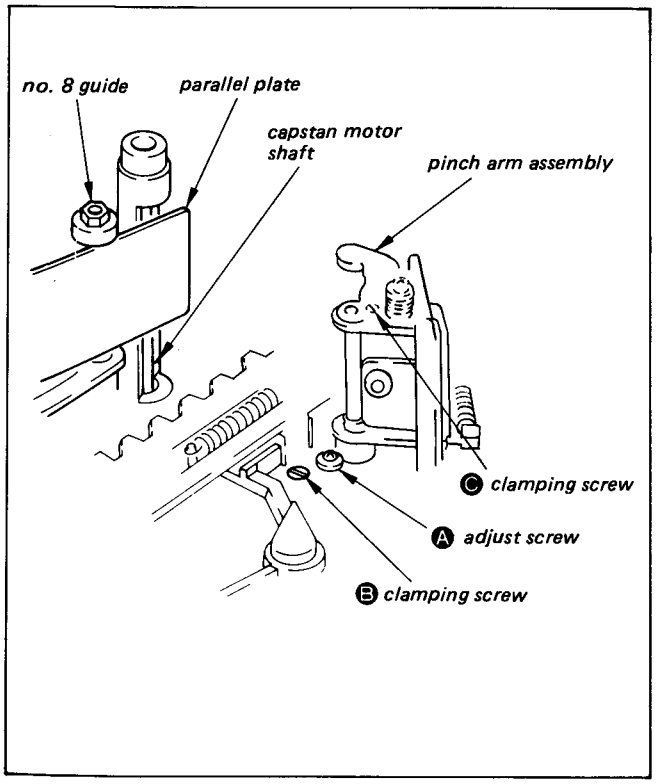

Fig. 3-18

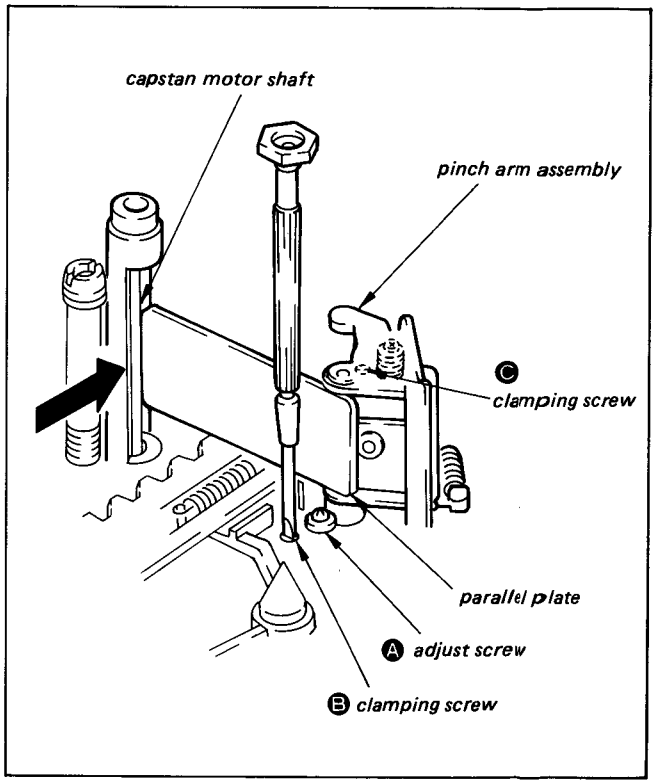

Fig. 3-19

3-8. REMOVAL OF THE No. 2 AND No. 3 GUIDES

3-8-1. Removal of the No. 2 Guide

❶ Remove the 1x3 tap-in screw.
❷ Remove the 1.4x3 tap-in screw.
❸ REmove the No. 2 guide assembly.

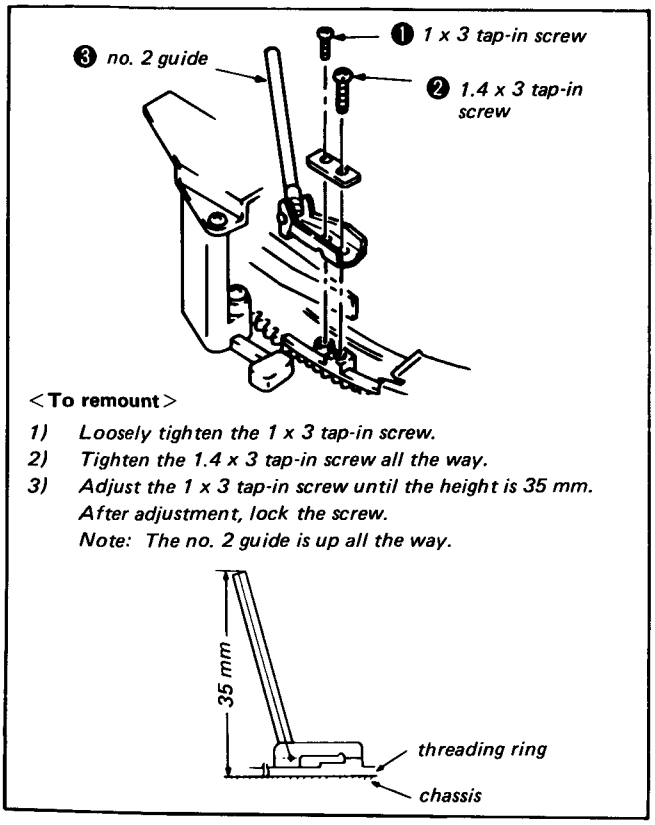

<To remount>

1) *Loosely tighten the 1 x 3 tap-in screw.*
2) *Tighten the 1.4 x 3 tap-in screw all the way.*
3) *Adjust the 1 x 3 tap-in screw until the height is 35 mm. After adjustment, lock the screw.*
Note: The no. 2 guide is up all the way.

Fig. 3-20 Removal of the no. 2 guide

3-8-2. Removal of the No. 3 Guide

❶ Remove the 1x3 tap-in screw.
❷ Remove the 1.4x3.5 tap-in screw
❸ Remove the No. 3 guide assembly.

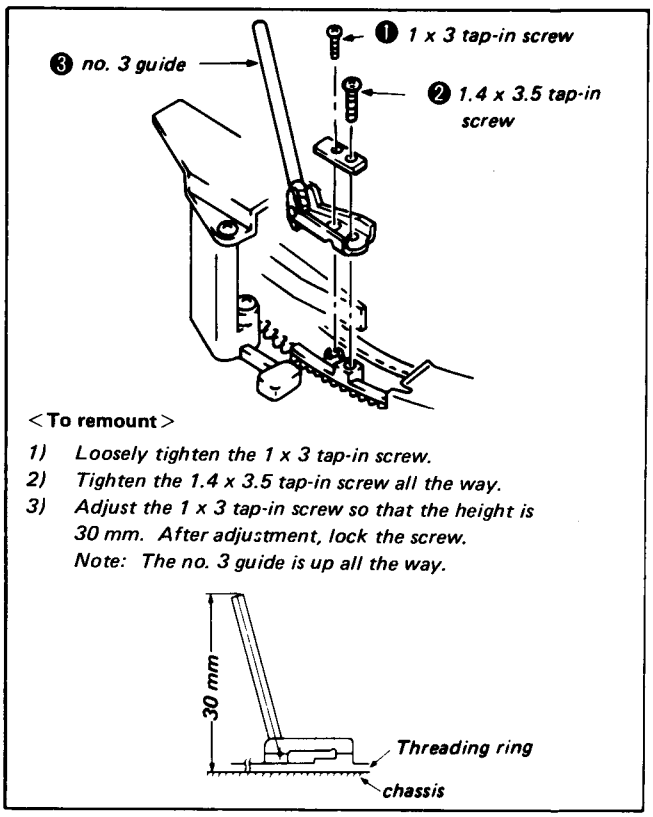

<To remount>

1) *Loosely tighten the 1 x 3 tap-in screw.*
2) *Tighten the 1.4 x 3.5 tap-in screw all the way.*
3) *Adjust the 1 x 3 tap-in screw so that the height is 30 mm. After adjustment, lock the screw.*
Note: The no. 3 guide is up all the way.

Fig. 3-21 Removal of the no. 3 guide

3-9. REPLACEMENT AND ADJUSTMENT OF THE S THREADING RING

3-9-1. Preparation to Remove the S Threading Ring, Removal of the ACE Assembly, FE Head (Fig. 3-22)

❶ Remove the cross-recessed head screw.
❷ Remove the No. 6 guide nut.
❸ Remove the No. 6 washer.
❹ Remove the No. 6 guide spacer.
❺ Remove the compression coil spring.
❻ Remove the 2 guide adjustment screws, then remove the ACE assembly and the FE head.

Note:
Since the ACE assembly and the FE head are connected by a lead wire, be careful when removing them. It is not necessary to remove the compression coil spring below the ACE assembly, but be careful not to use it.

❼ Remove the L motor assembly, refer to 1) of "SECTION 1-15-2" Unthreading Method (II).

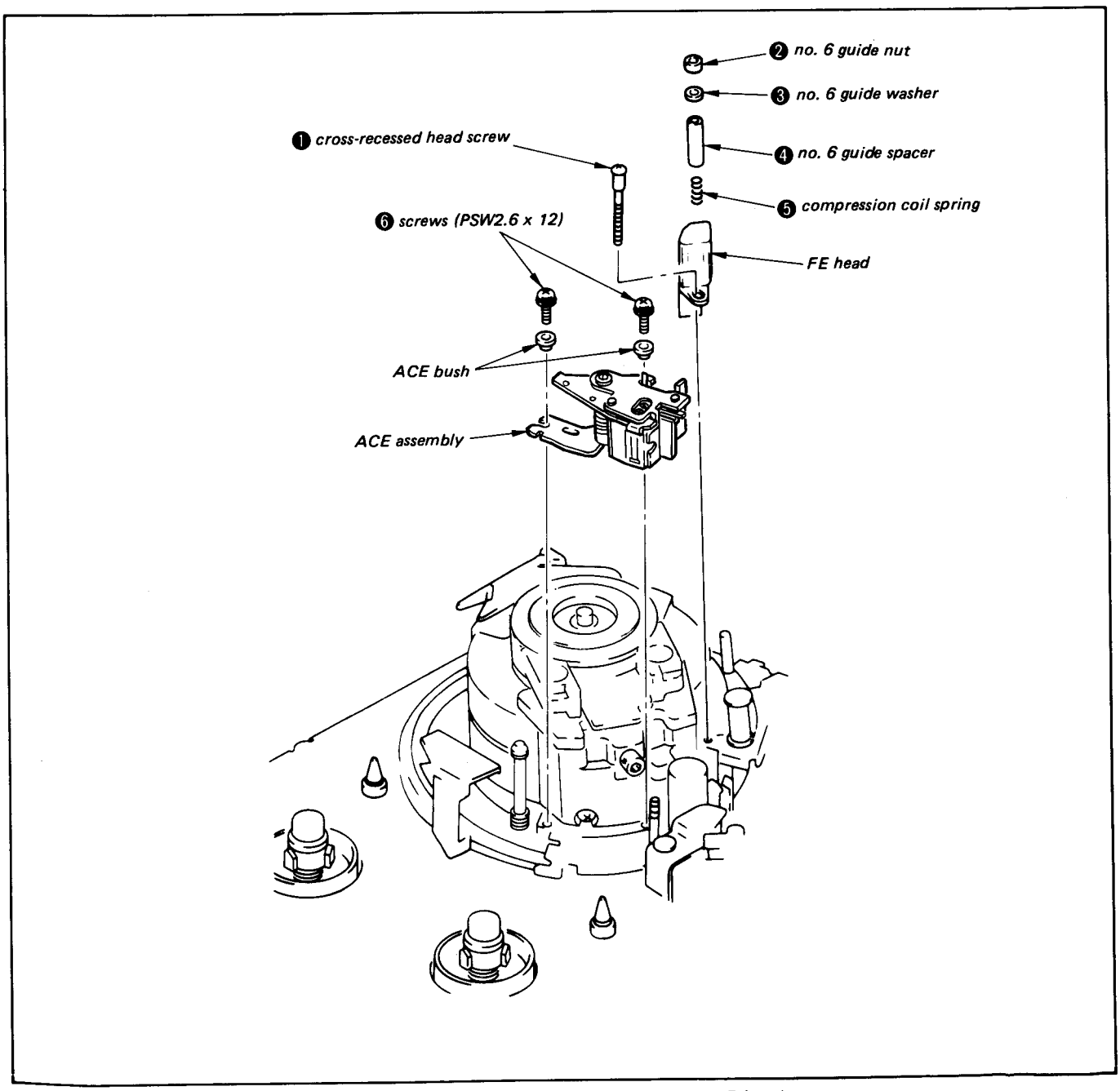

Fig. 3-22 Removal of the ACE assembly, FE head

Removal of Miscellaneous Parts (Fig. 3-23)

Proceeding in the same manner as in replacement of the drum assembly, measure the width of the gap between the upper drum and the adjusting plates (Fig. 3-13).

❶ Remove the screw, then remove the tape guide ground plate and adjusting plates 3-1 and 2.

❷ Remove the two screws, then remove the tape holder assembly.

❸ Remove the screw, then remove the guide plate.

❹ Remove the 2 PTPWH2x8 screws and the M2.6 screw, then remove shuttle guide 2.

❺ Remove the 3 PTPWH2x8 screws and the M2.6 screw. Then remove the 2 claws holding shuttle guide 1-YA in place, and finally remove shuttle guide 1-YA.

❻ Remove the slant base assembly.

❼ Remove the BVTT2.6x6 screw, then remove the pinch liner link.

Note:

After removing the guide plate, do not thread or unthread a tape with the shuttle guide mounted.

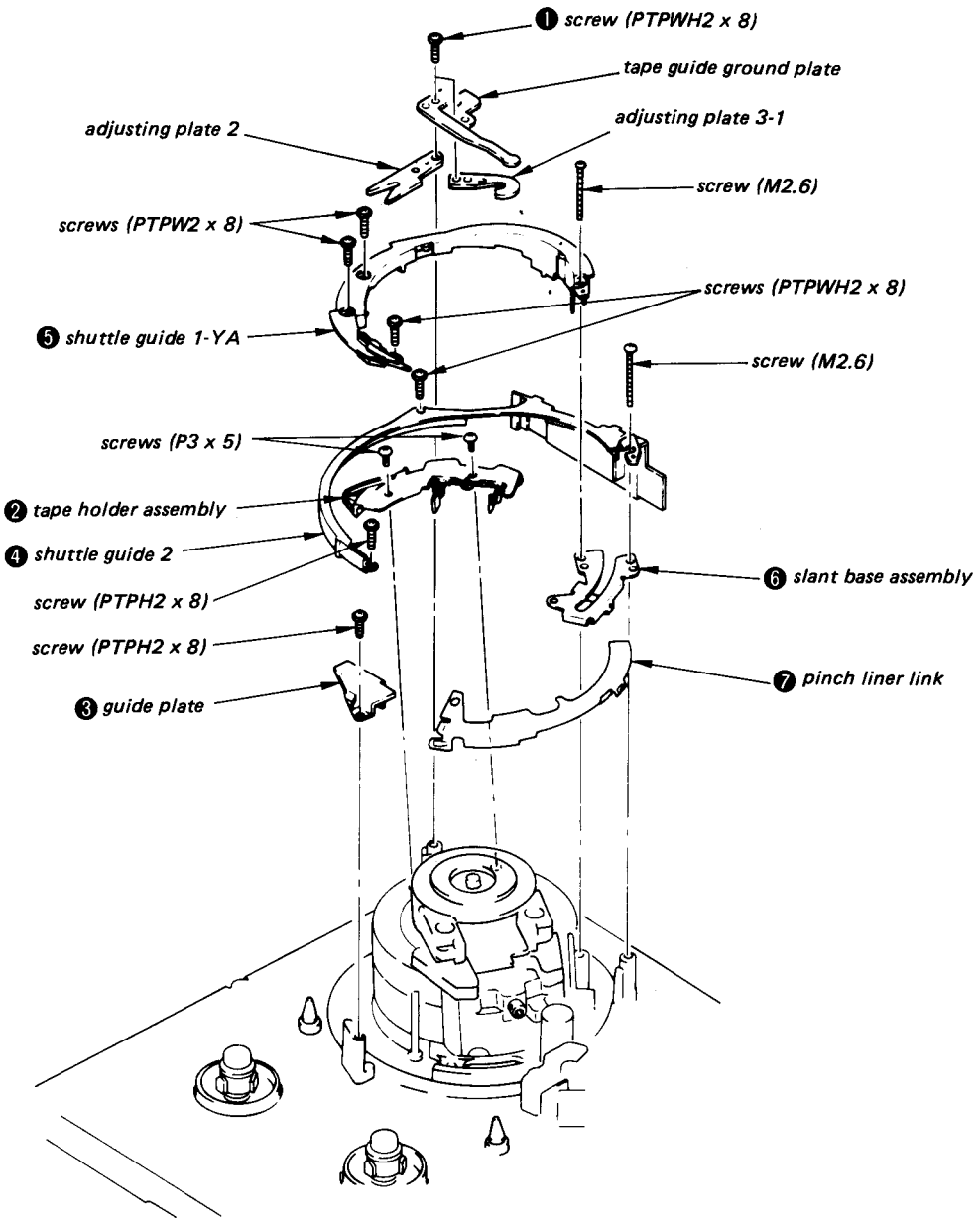

Fig. 3-23 Removal of miscellaneous parts

3-9-2. Removal of the S Threading Ring (Fig. 3-24)

❶ Turn the stop washer and remove the ring roller.
❷ Remove the S threading ring.

Note:
Once a stop washer has been removed, do not use it again.

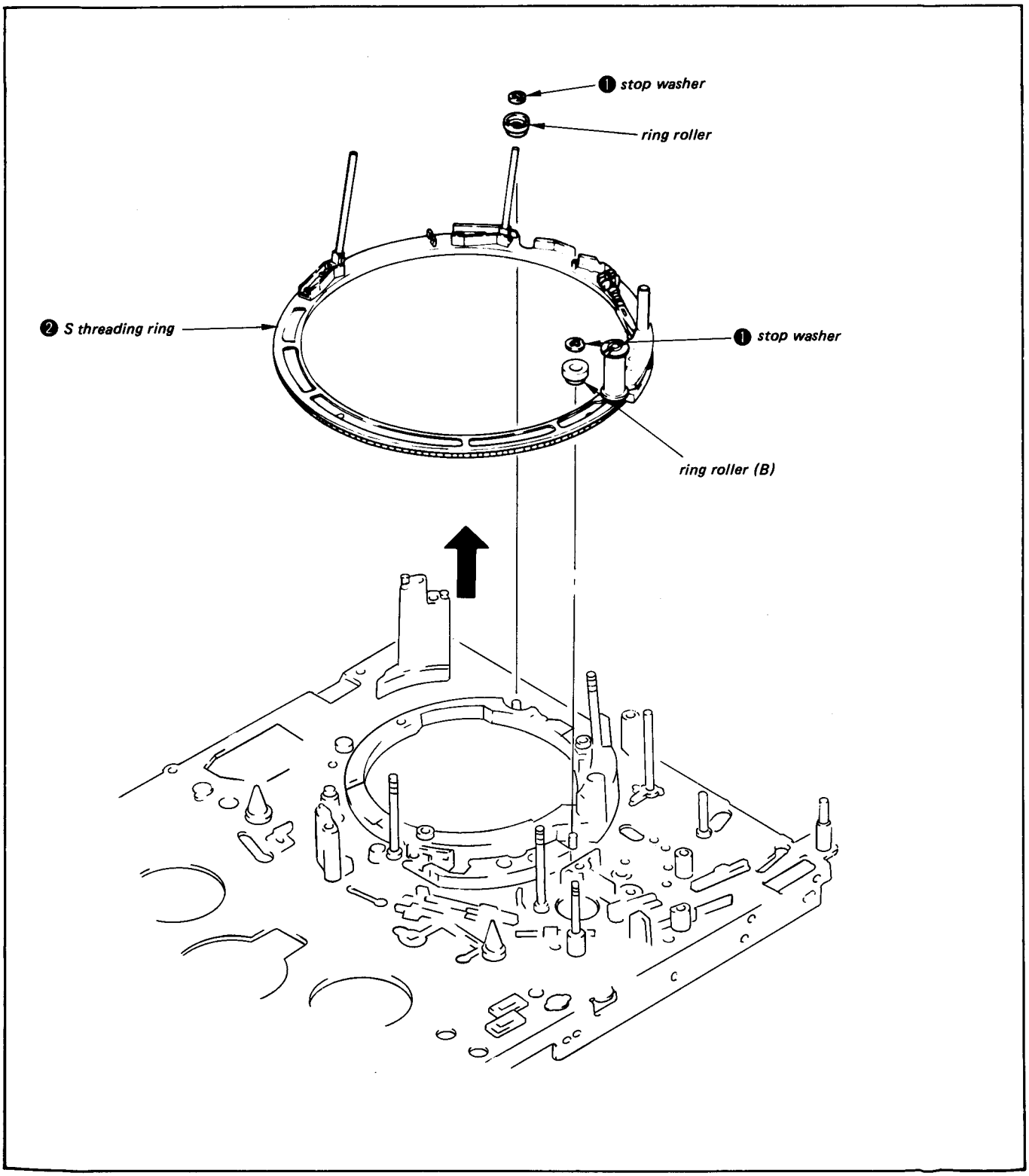

Fig. 3-24 Removal of the S threading ring

3-9-3. S Threading Ring Mounting and Position Adjustment

1) Keep T slider assembly ❶ at the position where the unthreading has been complete (the state where flag assembly ❷ completely covers T coil sensor ❸).
2) Mesh S threading ring ❹ with gear chassis block assembly ❺ so that the mechanical chassis hole comes to the longhole center.
   (If the mechanical chassis hole does not come to the center, turn the S threading ring in clockwise.)
3) Install ring roller (B) ❻, and fix with the retaining washer.

Note:

After replacement and installation, adjust the ACE assembly according to the tape pass adjustment procedure.

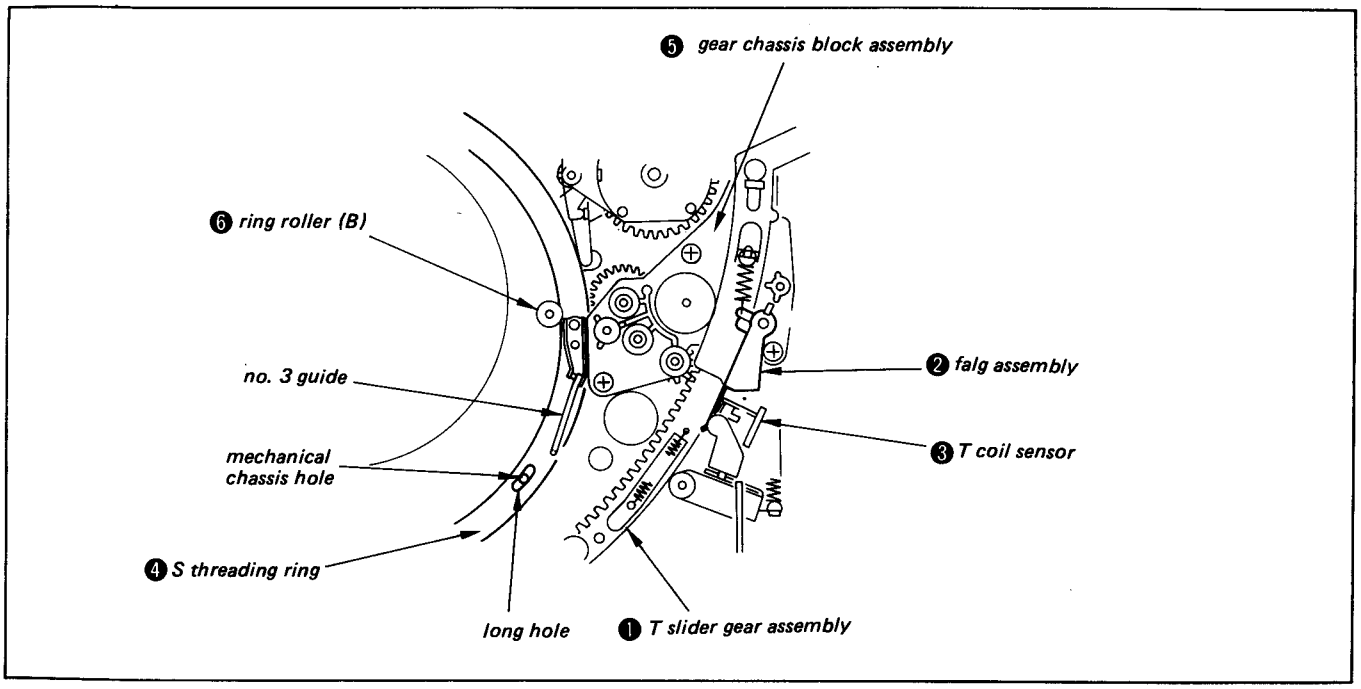

Fig. 3-25

3-10. REMOVAL AND ADJUSTMENT OF THE REEL BLOCK ASSEMBLY

3-10-1. Removal of the Reel Block Assembly

Refer to SECTION 2 DISASSEMBLY, 2-9 REMOVAL OF THE REEL BLOCK ASSEMBLY. (SERVICE MANUAL)

3-10-2. Removal and Refitting of the Tension Regulating Lever

[Removal]

1) Remove spring ❶ and remove S coil sensor ❷.
2) Remove tension regulating band ❸.
3) Remove spring ❹.
4) Unlock claw ❺ and remove tension regulating lever assembly ❻.

[Installation]

1) Insert tension regulating lever assembly ❻ until claw ❺ locks to shaft ❼.
2) Set spring ❹ across the claw of function lever ❽ and the fourth place from the left of the tension regulating lever assembly ❻ in section Ⓐ.
3) Push tension regulating lever assembly ❻ in arrow Ⓑ direction, and check it returns correctly.
4) Push tension regulating band ❸ until its hole is locked with the protrusion of tension regulating lever assembly ❻.
5) Insert shaft ❾ into the hole of S coil sensor ❷, and set spring ❶ across the claws of S coil sensor ❷ and the claw of function lever ❽.

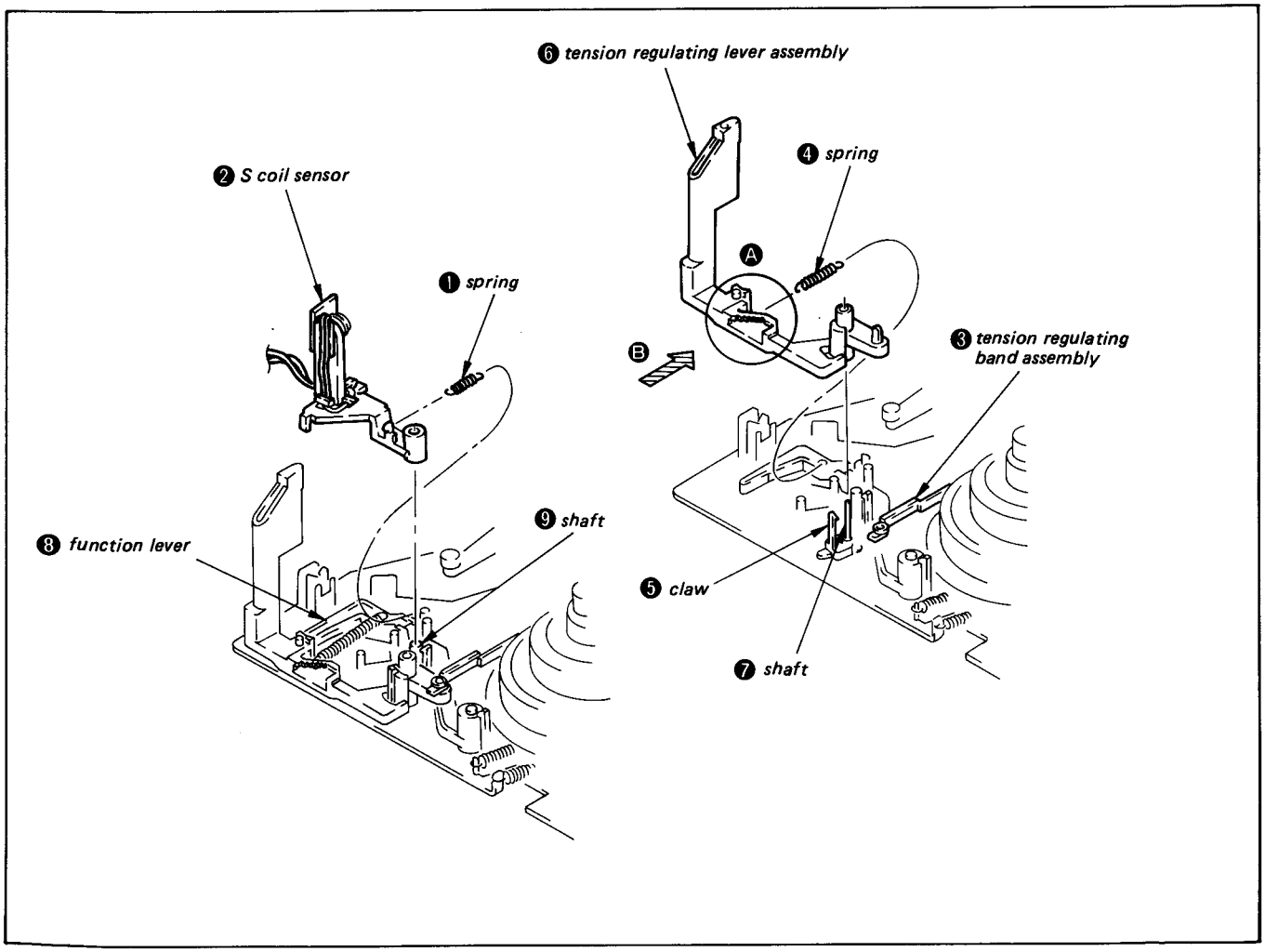

Fig. 3-26

3-10-3. S Coil Sensor, Harness Treatment and Operation Check

1) Thread harness ❷ from S coil sensor ❶ through claws ❹ avoiding subchassis hole ❸ and wind the harness around subchassis protrusion ❺.

2) While keeping tension regulating lever assembly ❻ pushed in arrow Ⓐ direction, slightly push S coil sensor ❶ in arrow Ⓑ direction. Release the hand and check that it is sprung back until it hits the subchassis protrusion ❼.

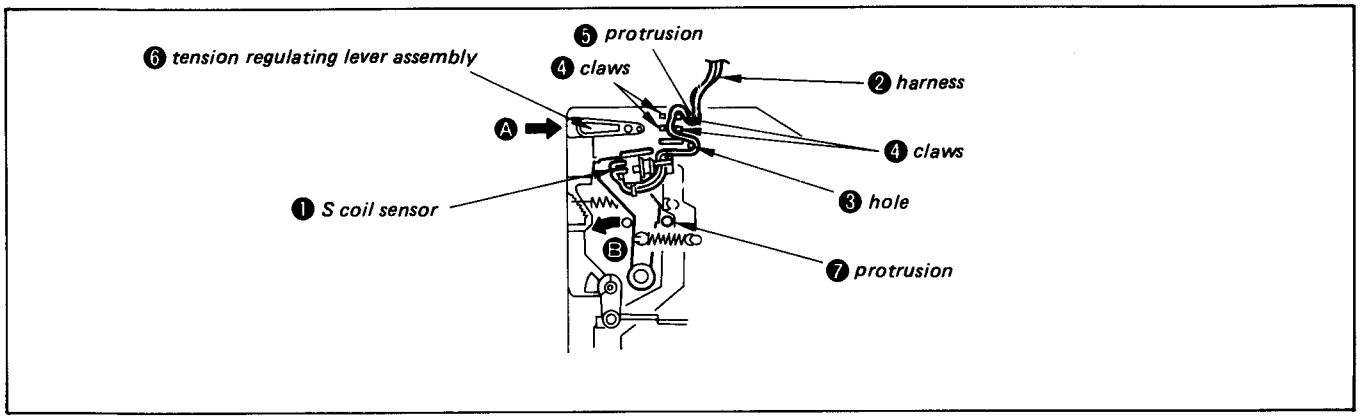

Fig. 3-27

3-10-4. Adjustment of the Position of Tension Regulating Lever

[Method of adjustment]

1) Set a cassette and enter a playback mode.
2) Check that the tension regulating lever assembly's tape guide pin is between shuttle guide 2 and shuttle guide 1-YA, as shown in Fig. 3-21.
3) If not positioned as step 2), press EJECT button and take out the cassette, loosen the adjusting screw, and adjust by moving the tension regulating lever assembly in arrow Ⓐ direction.
4) After the adjustment, tighten the adjusting screw while keeping the tension regulating lever assembly in the position.
5) Repeat steps 1) and 2).

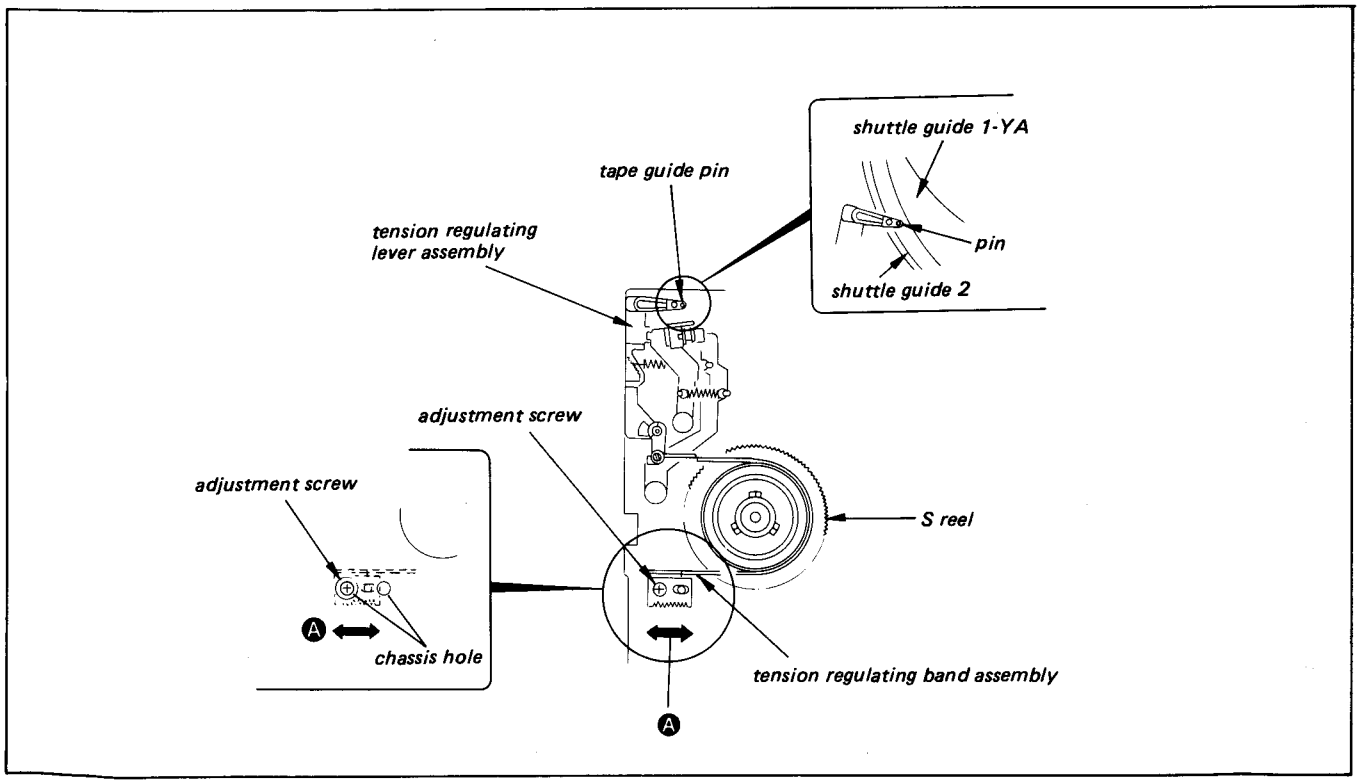

Fig. 3-28

3-11. REMOVAL AND INSTALLATION OF LS GEAR

3-11-1. Removing LS Gear

1) Open the TA-36/37 board.
2) Remove two connectors (CN106 and CN109).
3) Remove two screws (BVTP3 x 8) ❶ and remove U/D arm guide ❷.
4) Remove one screw (BVTP3 x 8) ❸.
5) Hold LS gear assembly ❹ at part Ⓐ with forefinger and part Ⓑ with thumb.
6) Move LS gear assembly ❹ in arrow Ⓒ direction and pull two shafts of LS gear assembly ❸ from inner frame ❺.
7) Pull the leading end Ⓔ of LS gear assembly ❹ from the notch Ⓓ of front frame ❻, and remove roller ❽ from U/D arm assembly ❼.
8) Lift LS gear assembly ❹ while pulling in arrow Ⓕ direction.

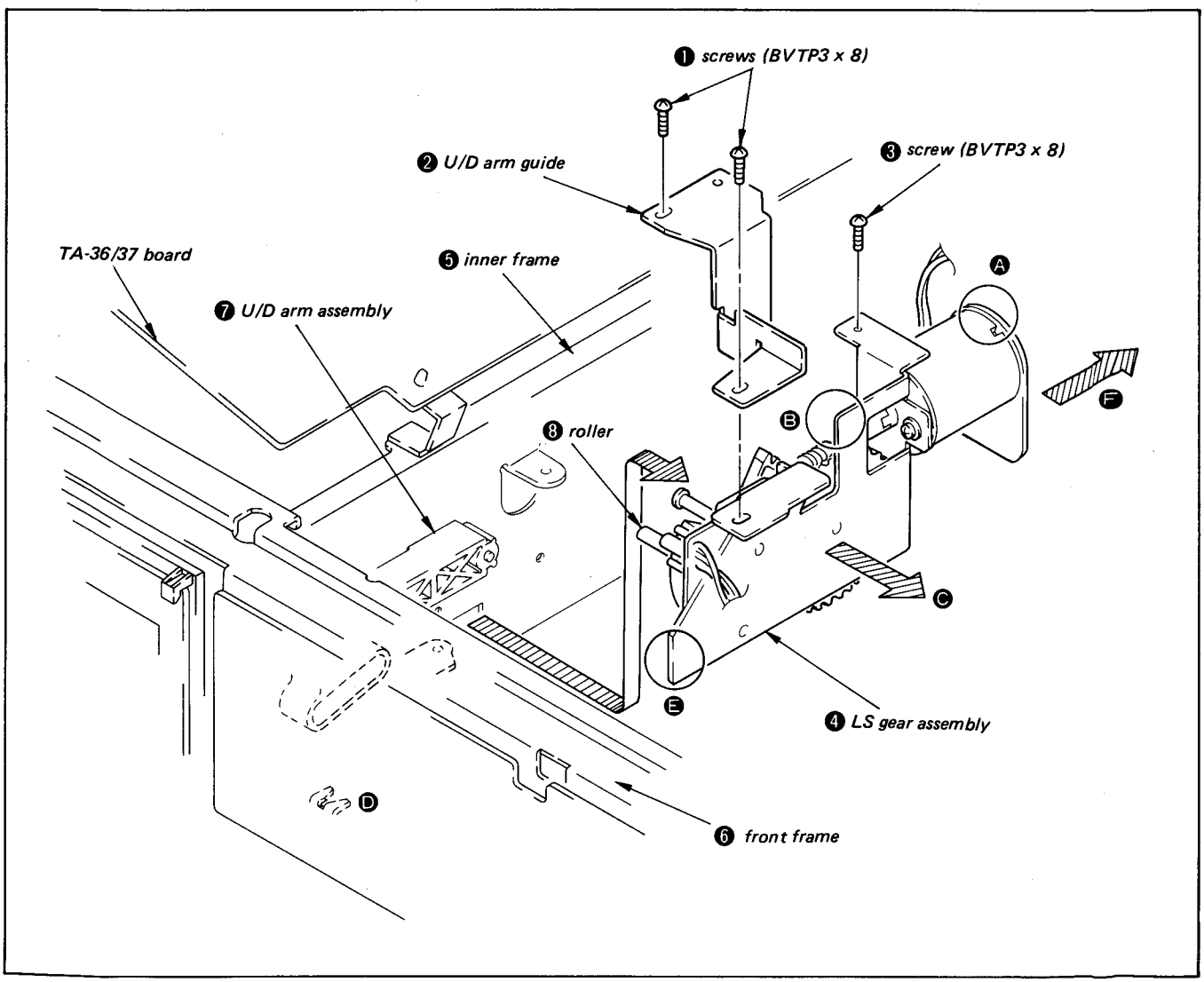

Fig. 3-29

3-11-2. Refitting of the U/D Arm Assembly

1) Insert inner frame shaft ❷ in the hole of U/D arm assembly ❶.
2) Push U/D arm assembly ❶ in arrow Ⓐ direction until its roller ❸ and protrusion ❹ are inserted into two holes of the inner frame.

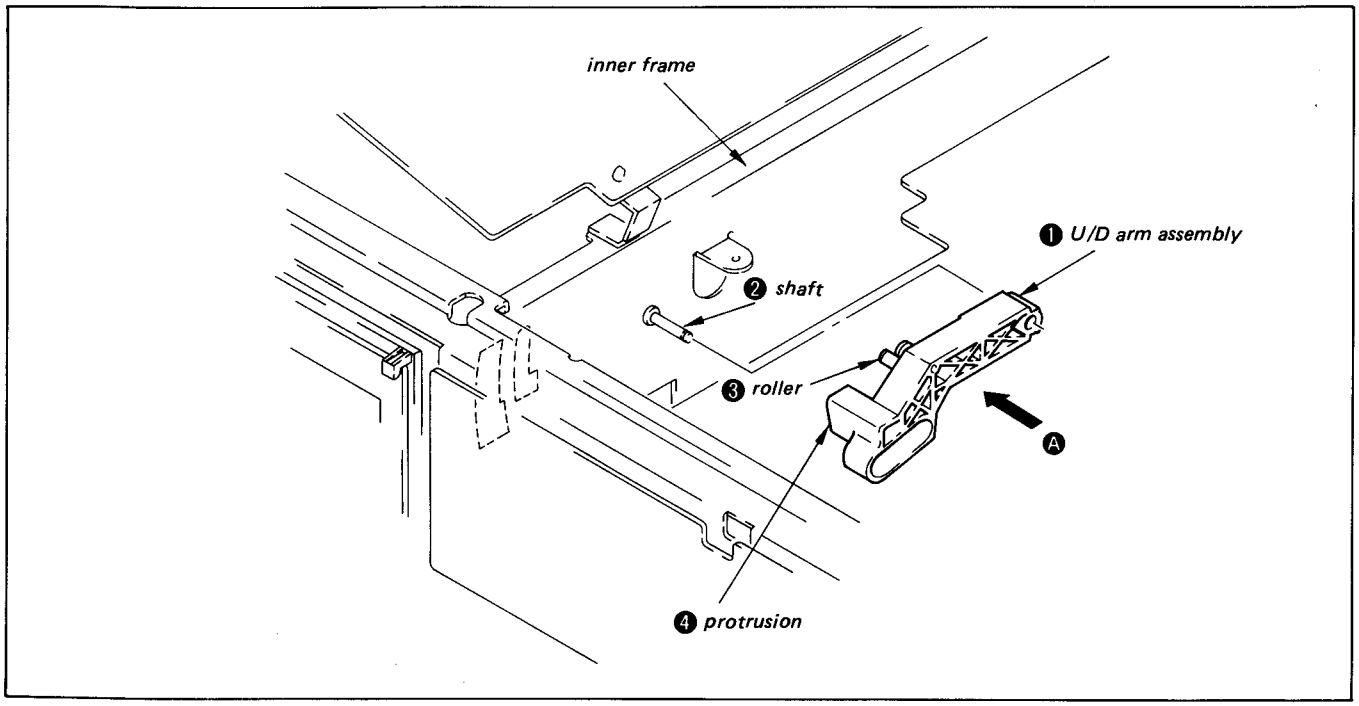

Fig. 3-30

3-11-3. Adjustment of the Position of the LS Gear Assembly

Set the protrusion ❷ of LS gear assembly ❶ to the lowest pattern of US-1 board ❸.

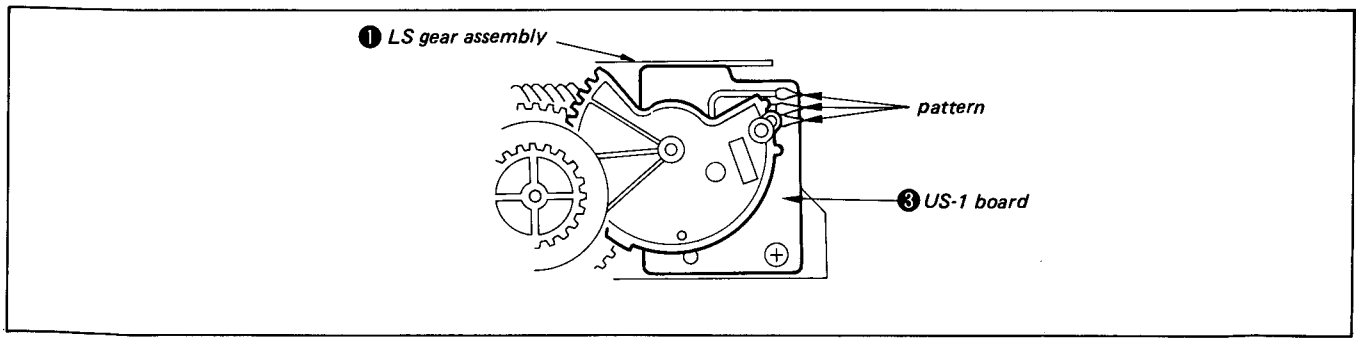

Fig. 3-31

3-11-4. Installation of LS Gear Assembly

1) Hold LS gear assembly ❶ at parts Ⓐ and Ⓑ, and place it in arrow Ⓒ direction into the set, avoiding the SS-50 board, rise ❹ and U/D arm assembly ❸.
2) Place part Ⓓ of LS gear assembly ❶ on the rise ❹ of the front frame, and place part Ⓔ of LS gear assembly ❶ on the rise ❷ of the middle frame.
3) Insert roller ❺ into the long hole of U/D arm assembly ❸, and insert part Ⓕ of LS gear assembly ❶ into notch ❻ of the front frame.
4) Insert shaft ❼ and the gear center shaft ❽ into the holes of the middle frame respectively, and install LS gear assembly ❶ by pushing in arrow Ⓖ direction.

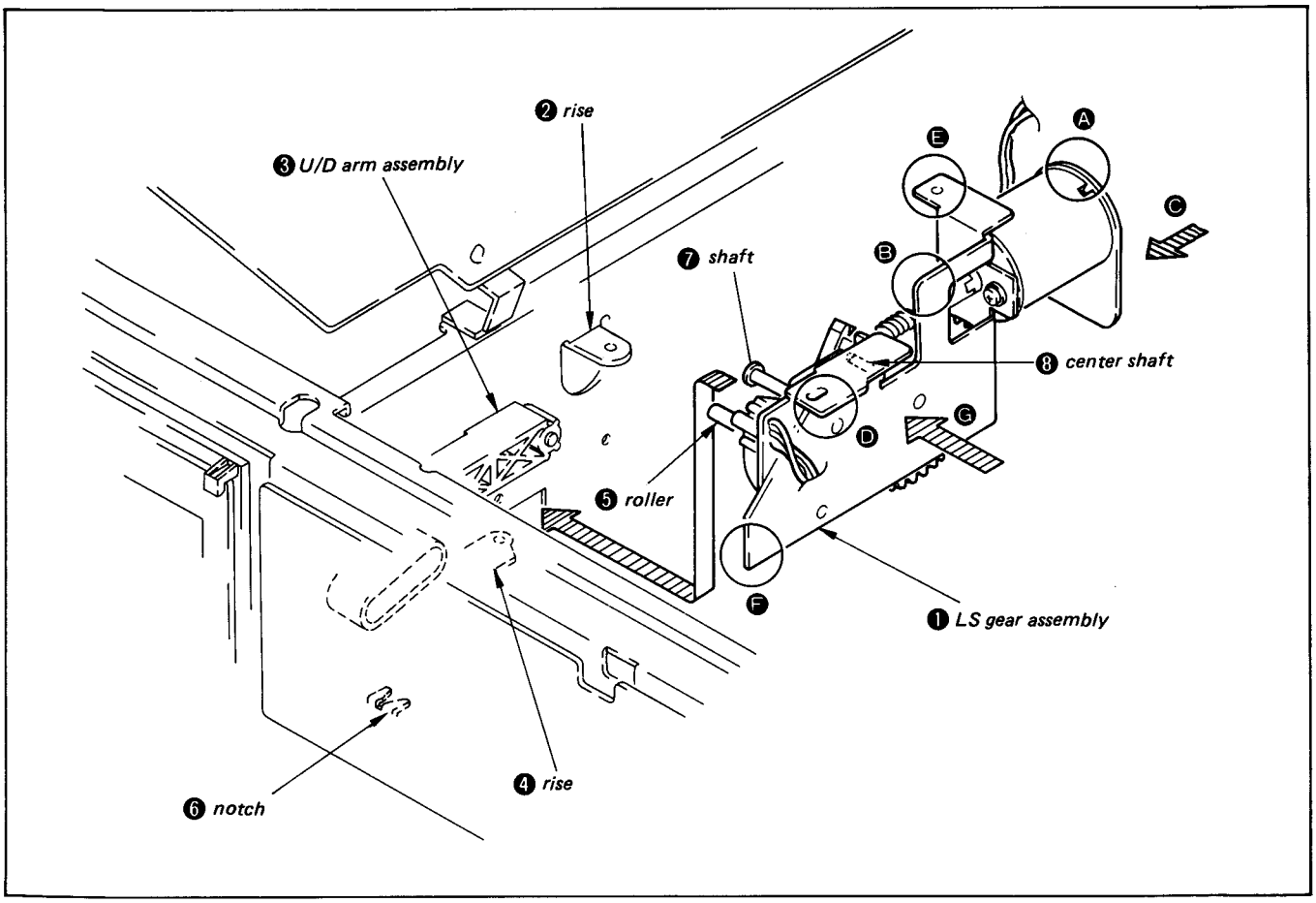

Fig. 3-32

3-12. ADJUSTMENT OF THE FORWARD BACK TENSION

[Method of measurement]

1) Insert the torque cassette (SL-0003C) and put the unit in playback mode.
2) Read the value on the meter on the S reel side after the needle has gone around about once.
   The correct value is 44 ±4 g·cm.

Notes:

i) The set must be perfectly level during this measurement.

ii) After the measurement, the tape can become slack when the stop button is pressed. If this happens set the unit is forward mode to take up the slack before removing the tape.

[Method of adjustment]

Move the position of the tension coil spring that is hooked on the tension regulating lever assembly in the direction of arrow Ⓐ unit the measured value falls within the correct range.

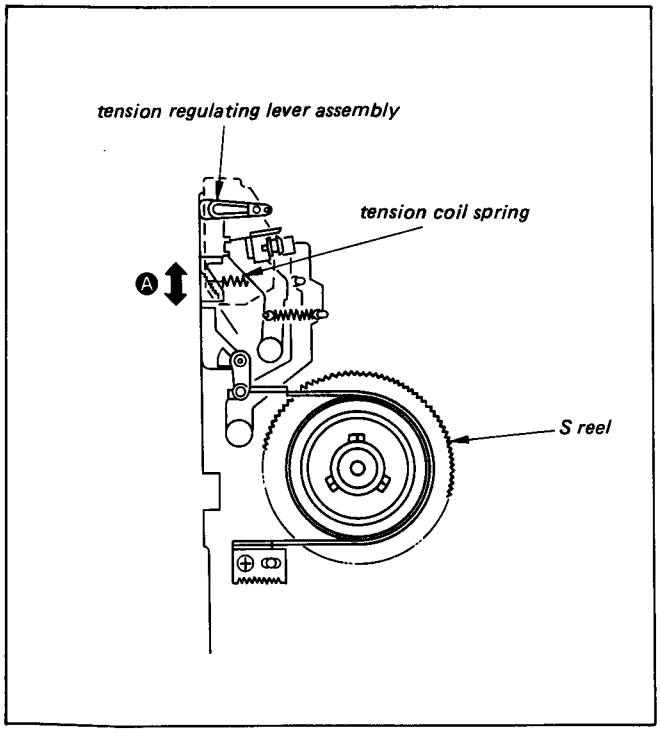

Fig. 3-33 Adjustment of the back tension

4. TAPE PATH ADJUSTMENT

4-1. TRACKING ADJUSTMENT

This adjustment has significant effect on picture quality in each mode and tape interchangeability, so please perform it very carefully.

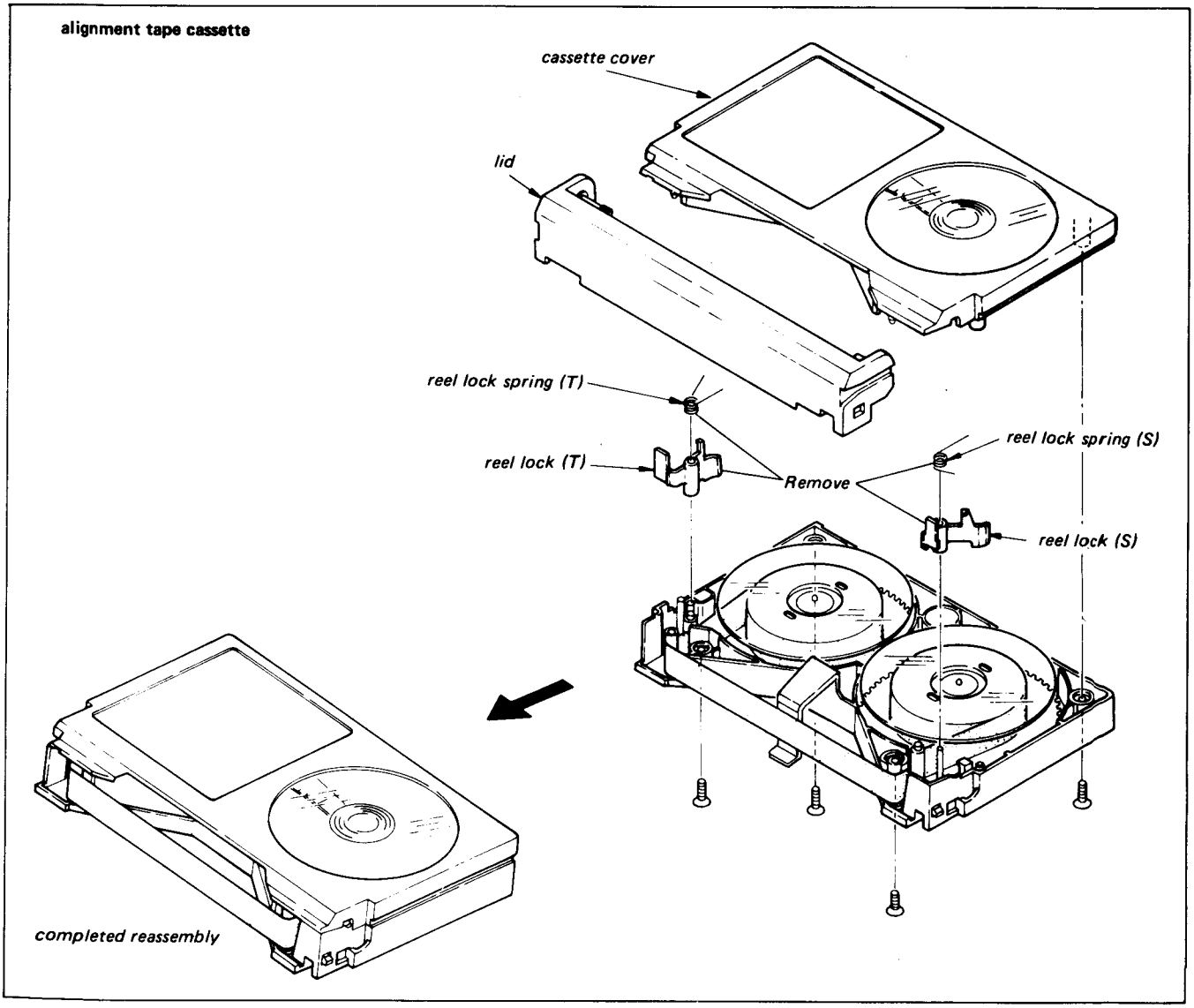

Fig. 4-1 Cassette Holder Remodeling

4-1-1. Preparation

1) When modifying alignment tape KR5-2H, use caution not to dislodge the tape reels from their correct position. Refer to Fig. 4-1 and remove the four screws that secure the upper cover to the lower cover.
   Remove the upper cover and lid. Separate the lid and lid tension spring from the upper cover. Remove the two reel lock springs (T and S) and the two reel locks (T and S). Remount only the upper cover, being certain that it is properly mated with the lower cover. Secure the covers with four screws. NOTE — If the reel locks, and related springs are not removed from the cassette, the tape will load but will not thread. In this case the cassette will be ejected from the VTR approximately eight seconds after being loaded into the VTR.
2) Clean the tape contact surfaces (tape guides, drum, capstan shaft, pinch roller, ACE FE head surface) with chamois dampened with methanol.
3) Oscilloscope connections:
   1ch: CN703 . . . 3 pin (RP-31 board)
   2ch: CN703 . . . 2 pin (RP-31 board)
4) Play back the tracking portion of the modified alignment tape.
5) Confirm that the RF output waveform is flat, with maximum amplitude. (The waveform should increase and decrease, remaining flat, when the tracking control knob is turned back and forth.) Also, when the waveform is maximum, confirm that the RF output waveform variation and contact satisfy the specifications shown in Fig. 4-2. If they do not, follow the instructions in 6).
6) If the tracking control knob is turned and the entrance waveform does not flatten as shown in Fig. 4-3(a), perform the entrance side adjustment in 4-1-2. If the exit waveform does not flatten as shown in Fig. 4-3(b), perform the exit side adjustment in 4-1-3.

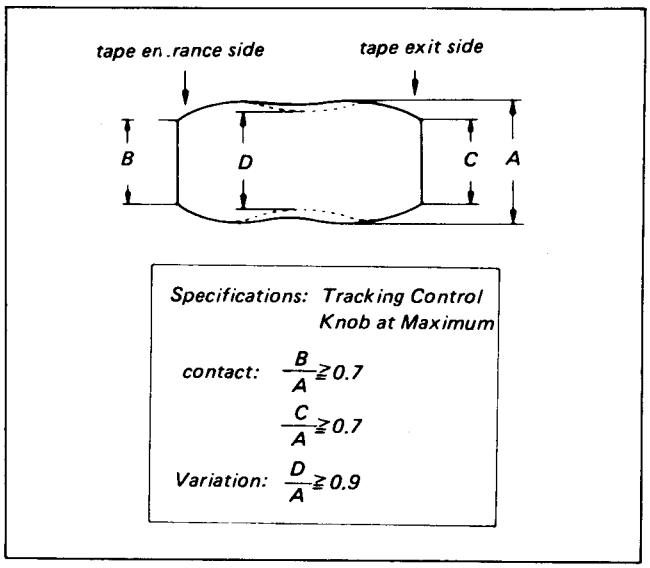

Fig. 4-2

	BOARD	CONNECTOR & PIN NO.
RF Output Waveform	RP-31	CN703 . . . 3
External Trigger	RP-31	CN703 . . . 2
Audio Out	TA-36/37	CN901 . . . 1
Video Out	YC-40	VIDEO OUT

Waveform Confirmation

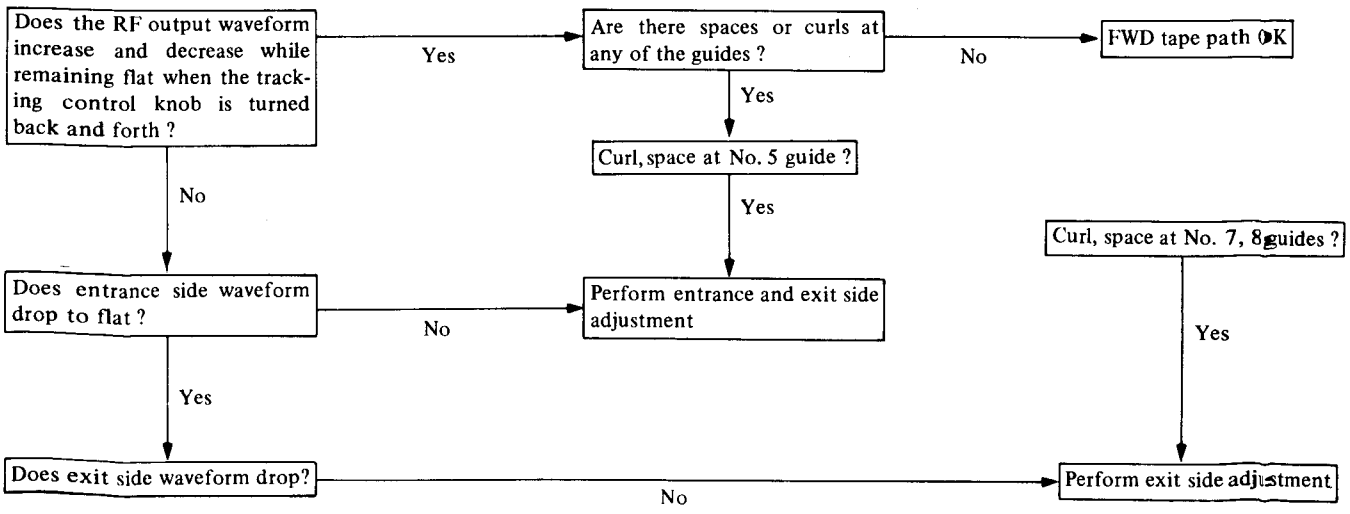

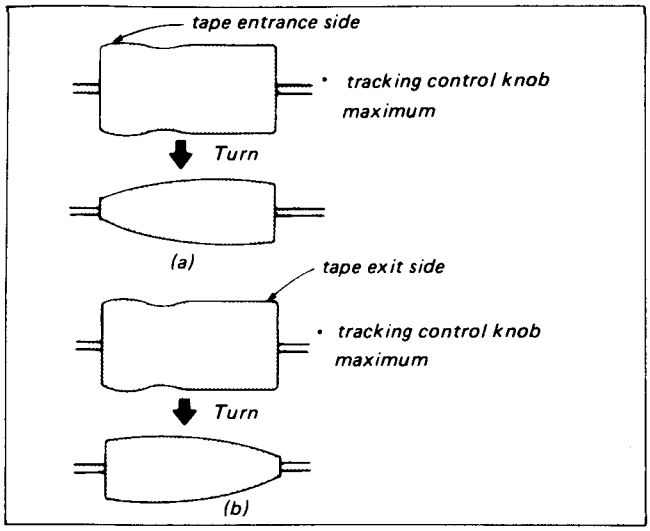

Fig. 4-3

Note:

After the indicated tape path adjustments that follow have been successfully completed using normal playback speed, operate the VTR in the Speed Search mode and look for curl at the tape guides. Readjust them if necessary. Then finally, playback a regulator L830 tape as a check-up. See Section 4-4.

4-1-2. Entrance Side Adjustment

Always perform the exit side adjustment as well as the entrance side adjustment, Fig. 4-4 illustrates the guides and adjustment locations.

1) Turn tracking control knob counterclockwise to drop RF output waveform to about 60% of maximum
2) Turn no. 6 guide counterclockwise to free tape transportation to the drum. Use a special notched screwdriver. (See section 1-8. Tools and Fixtures Required.)
3) Loosen no. 5 guide lock screw ❶, turn no. 5 guide so that the entrance side waveform is almost flat, as shown in the figure below, and tighten lock screw ❶. (See Fig. 4-5)

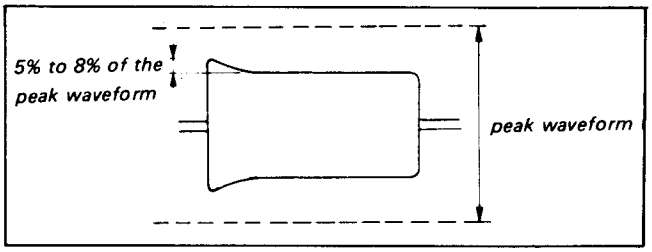

Note:

Be sure that the waveform remains as shown in the figure after tightening the lock screw ❶.

4) Next lower no. 6 guide and flatten the waveform.
5) Push the tape down between no. 4 and no. 5 guides by hand, and confirm that the entrance side RF waveform returns to the original state after being lowered. If the waveform is not as illustrated, or if the waveform does not flatten, or takes too much time to flatten after the entrance side tape is pushed down, follow the procedure below to adjust.
6) Check no. 5 guide for space and curl. If space or curl exists, follow the appropriate adjustment procedure.

Note:

Be sure that there is tape tension uppper and lower balance between no. 3 – no. 4 – no. 5 guides. Perform no. 3 or no. 5 guide lateral adjustment if necessary.

Entrance Side Flow Chart

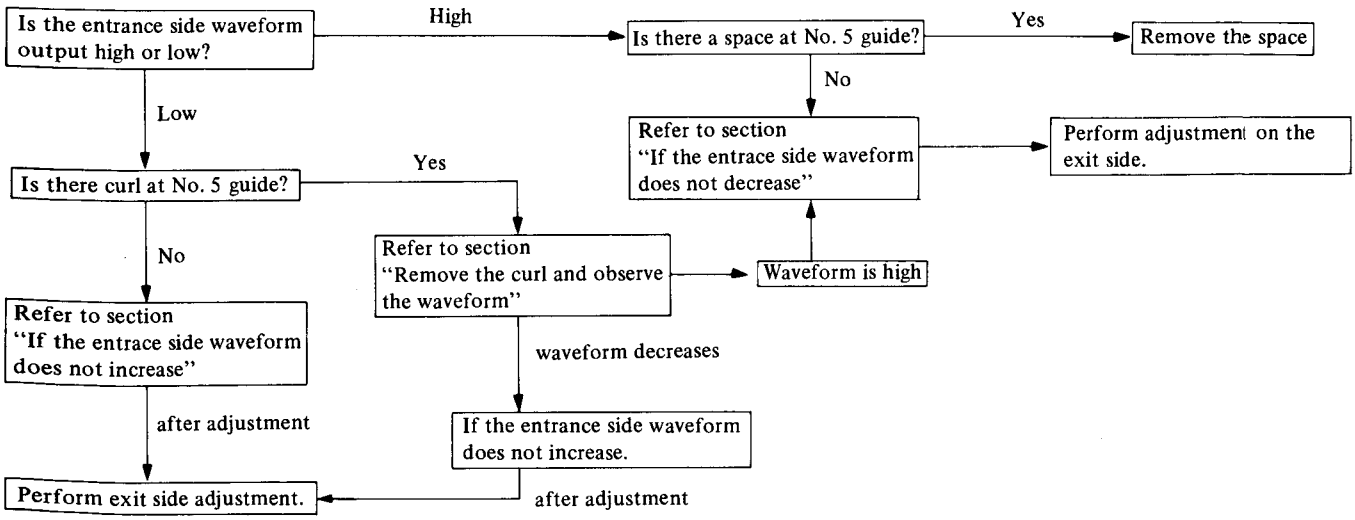

Note:

Upon failing to obtain the waveforms shown above, press down the tape at the entrance side, adjust as indicated below when a long time is needed for the waveform to return to the horizontal, or when it does not return at all.

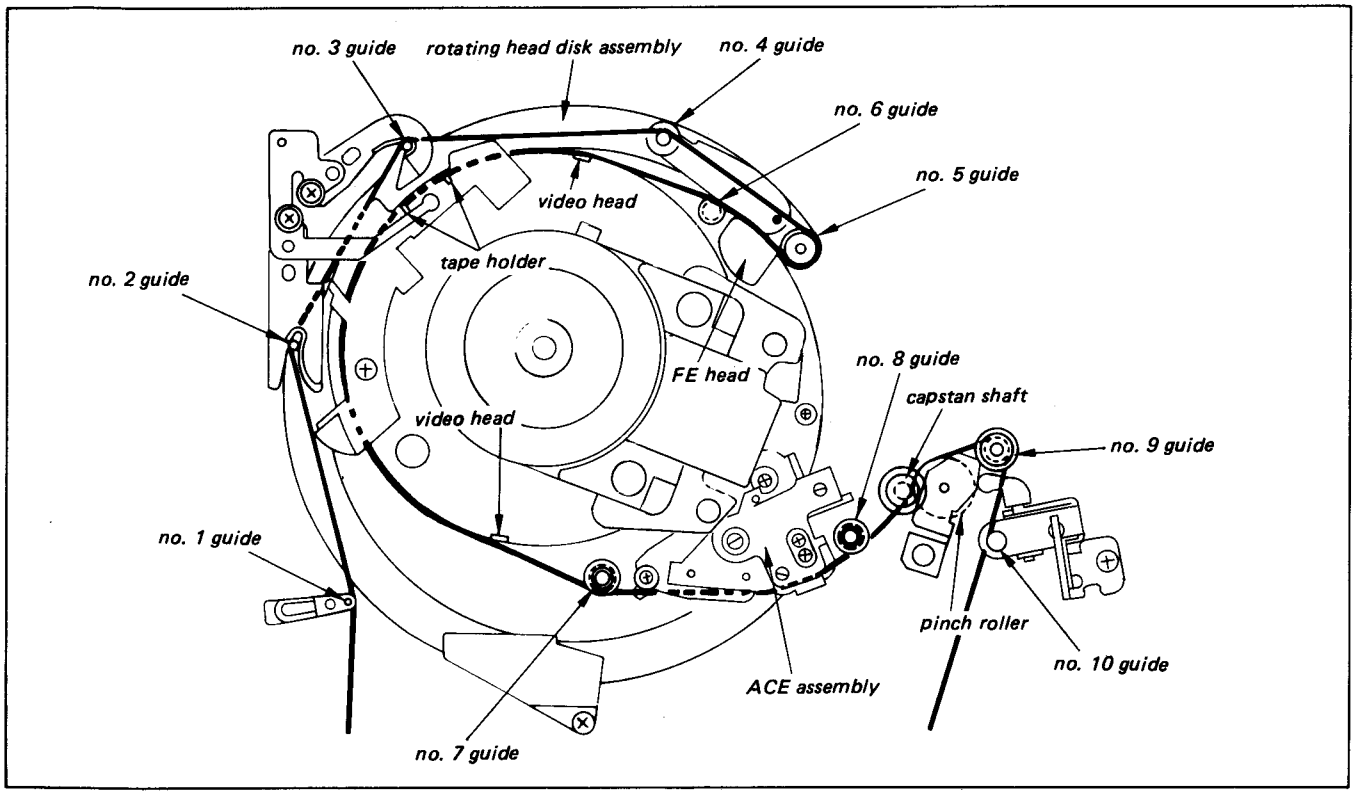

Fig. 4-4 Tape Guide Layout

[If the waveform entrance output does not increase]

1) Check to make sure tape upper and lower tension is equal between no. 3 – no. 4 – no. 5 guides. If it is not, perform no. 3 or no. 5 guide lateral adjustment.
   Note:
   Be sure there is no space at no. 4 guide lower flange.
2) Raise no. 4 guide lower flange to raise entrance output.
   Note:
   No. 4 guide lower flange may be raised 0.4 mm from its lowest position.
3) If the waveform does not increase in step 2), turn no. 5 lateral adjustment screw slightly (less then 360°) counterclockwise.

[If the waveform entrance output does not decrease]

1) Move the no. 3 guide adjust plate away from the drum, and tighten screw ❷ at the point just before the lower tension of the tape loosens.
2) If the tape is touching no. 4 guide lower flange, lower the flange. If it is floating, adjust no. 5 guide laterally.

[If there is space at no. 5 guide]

Turn no. 4 guide counterclockwise to raise the tape and remove the space at no. 5 guide.

Note:

Be careful not to create a large space at the bottom of no. 4 guide.

[If there is curl]

1) When there is a space at the bottom of no. 4 guide: Lean the adjust plate of no. 3 guide toward the outside until the point just before the lower tape tension loosens.
2) When there is curl but no space at the bottom of no. 4 guide:
   i) Confirm that no. 4 guide is not raised too high. Turn clockwise to lower if necessary.
   ii) If this does not slove the problem, tighten no. 5 guide lateral adjustment screw by turning clockwise until the curl disappears.

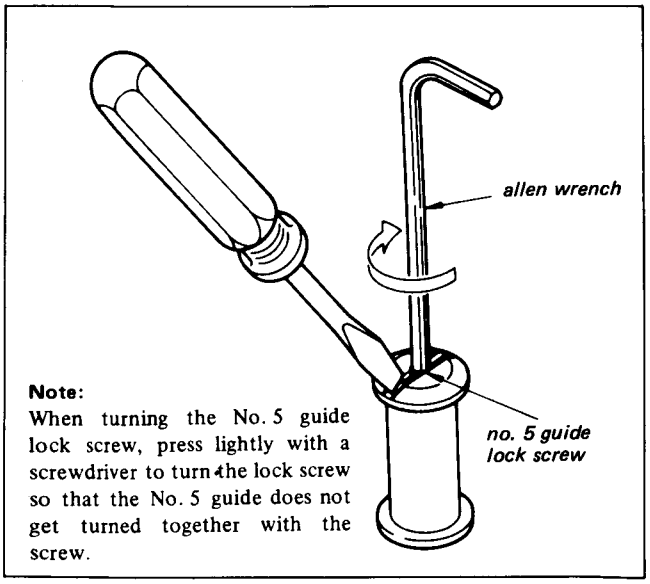

Note:
When turning the No. 5 guide lock screw, press lightly with a screwdriver to turn the lock screw so that the No. 5 guide does not get turned together with the screw.

Fig. 4-5

4-1-3. Exit Side Adjustment

1) Turn the tracking control knob counterclockwise to lower the RF output waveform to about 60% of the maximum.
2) Raise no. 7, 8 guides to free the tape transportation, and check the waveform. (This waveform is called "exit free waveform".)

Note:
Be careful not to raise the guides too much. They should be raised about 0.3 mm, and also, the tape should not touch the ACE head bottom flange. (Fig. 4-6)

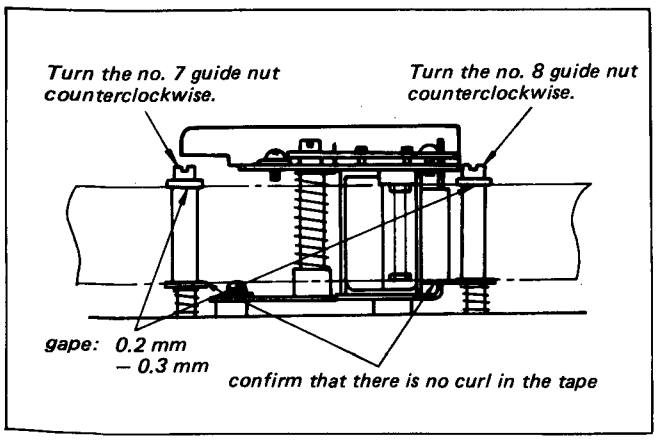

Fig. 4-6

i) If the exit free waveform is within the range illustrated in Fig. 4-7 (a), (b), proceed with exit side adjustment.
ii) If it is not within the specified range, follow the adjustment procedure in 4-3.

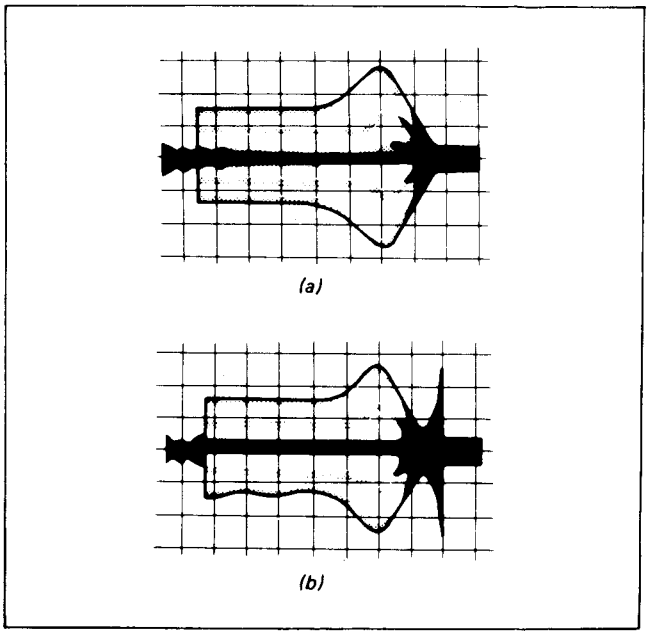

Fig. 4-7

3) Flatten the waveform with no. 7 guide, and match no. 8 guide to the tape. (Lower the guide to the point just before the waveform changes, and where there is no curl.) At this time, the exit side waveform may rise slightly, so lower no. 7 guide again to flatten it, and match no. 8 guide to the tape.
4) Confirm that there is no curl at no. 7, 8 guides in forward mode.
5) Confirm that curl and space do not appear at no. 8 guide in reverse mode. If curl or space appears, adjust with no. 9 guide.

4-2. ADJUSTMENT AFTER REPLACEMENT OF THE ACE ASSEMBLY

Perform the following adjustments after removing or replacing the ACE assembly.

4-2-1. Tracking Adjustment

1) Position the parallel plate (Fixture, SL-0657) at shown in Fig. 4-8, and turn audio head lateral adjustment screw ❶ to adjust the audio head vertically.

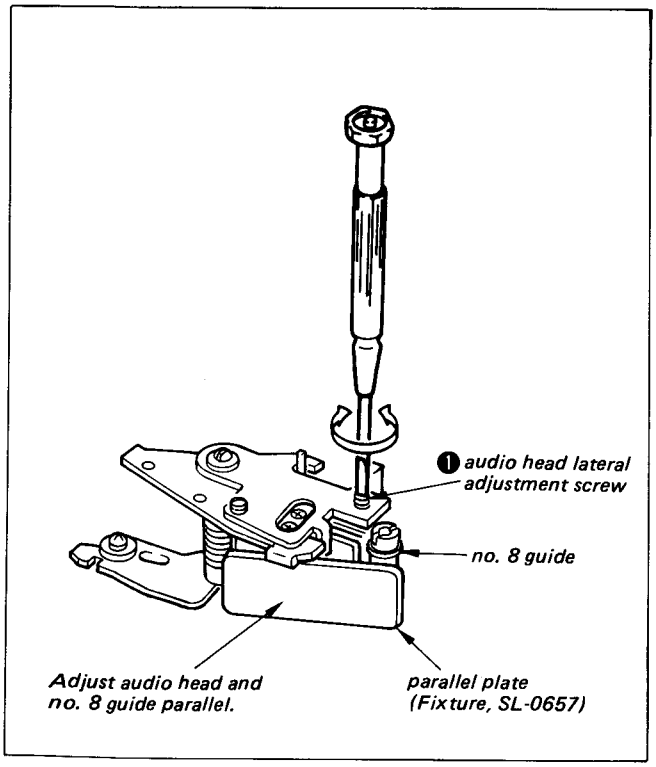

Fig. 4-8

2) Turn the tracking control knob counterclockwise to lower the RF output waveform to about 60% of the maximum.
3) Play back the tracking portion of the alignment tape raise no. 7, 8 guides about 0.3 mm and check the exit free waveform of the RF output waveform.

Note:

Be sure that the tape does not touch the bottom flange of the ACE assembly.

i) If the waveform is within the range illustrated in Fig. 4-7 (a), (b), proceed with the adjustment.
ii) If the exit free waveform appears as shown in Fig. 4-9, turn the ACE lateral adjustment screw clockwise until the waveform is within the range illustrated in Fig. 4-7 (a), (b).
iii) If the exit free waveform appears as shown in Fig. 4-10, turn the ACE lateral adjustment screw counterclockwise to obtain the waveform shown in Fig. 4-9, then turn clockwise again until the waveform is within the range shown in Fig. 4-7.

4) Turn the no. 7 guide to flatten the waveform, and match the no. 8 guide to the tape. (Lower the guide until the point just before curl appears at no. 8 guide flange.)
5) If the RF output waveform is as shown if Fig. 4-9, where the exit side is not flat, lower no. 7, no. 8 guides again to flatten it.

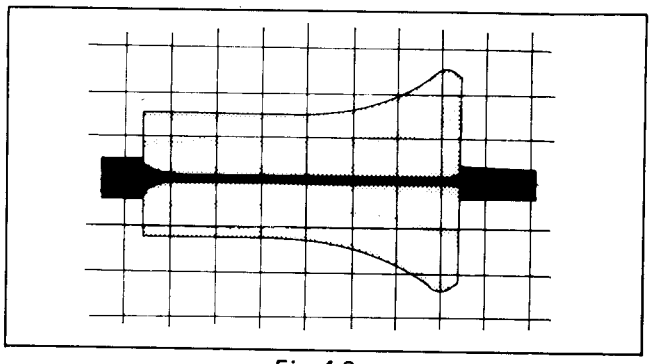

Fig. 4-9

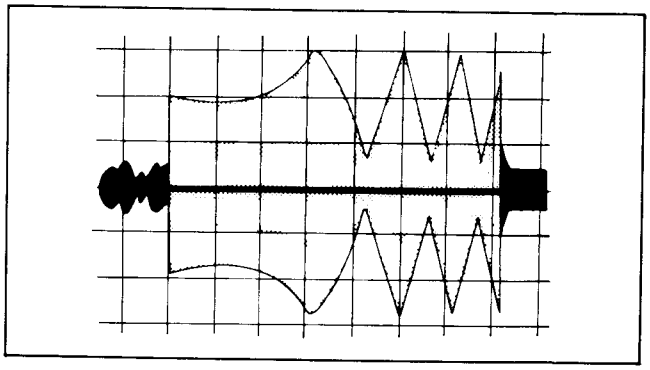

Fig. 4-10

4-2-2. Audio Head (ACE Assembly) Azimuth Adjustment

1) Connect the oscilloscope as follows:
CN901 . . . 1 pin (TA-36/37 board)
Play back the 5 kHz portion of the alignment tape.
2) Turn the azimuth adjustment screw (Fig. 4-11) so that the amplitude of the 5 kHz waveform is maximum.

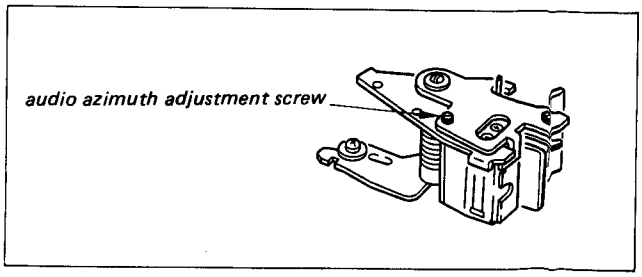

Fig. 4-11

4-2-3. CTL Head (ACE Assembly) Position Adjustment

This adjustment is both mechanical and electric: mechanically, it is the adjustment of the CTL head position, and electrically, it is the tracking control center adjustment. The procedure involves performing the electrical adjustment first, then the head position adjustment.

1) Connect the oscilloscope as follows:
   1ch CN703 . . . 3 pin (RP-31 board)
   2ch CN901 . . . 1 pin (TA-36/37 board)
   External trigger: CN703 . . . 2 pin (RP-31 board)
2) Play back the tracking portion of the alignment tape.
3) Turn the tracking control knob back and forth, and confirm that the output waveform level is maximum at the center click position, and that the 0 level of the audio signal is at the point where the RF output waveform Bch waveform appears, as shown in Fig. 4-12.
   If adjustment is necessary, proceed as follows.

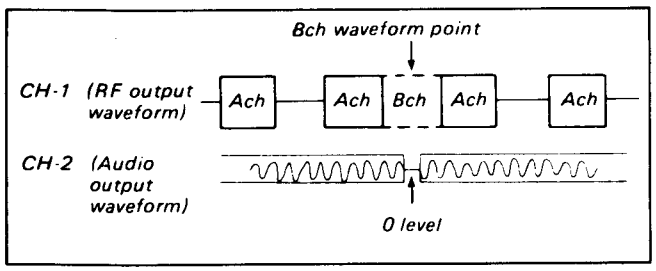

Fig. 4-12

4) Tracking Control Center Adjustment
5) CTL Head Position Adjustment
   Set the tracking control knob at the center detent position and loosen the two ACE assembly position adjustment screws ①. As shown in Fig. 4-13 slide the ACE assembly with a screwdriver until it is in the position shown in Fig. 4-12 and the RF output waveform is maximum. Tighten the screws ① when this position is obtained.
6) Replay the color bars of the alignment tape and check the picture quality.

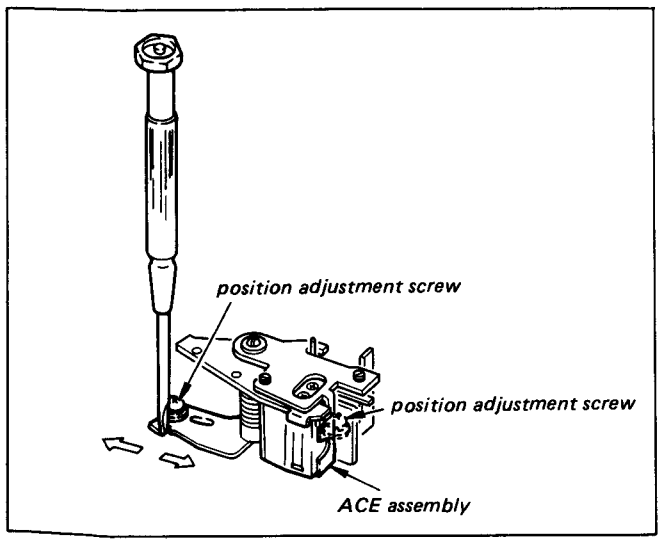

Fig. 4-13

4-2-4. Audio Head (ACE Assembly) Height Adjustment

Perform this adjustment only after completing the exit side tracking adjustment.

1) Oscilloscope connection:
   1ch: CN901 . . . 1 pin (TA-36/37 board)
   Replay the 5 kHz portion of the alignment tape.
2) Turn the audio head height adjustment screw ① and the lateral adjustment screw ② (Fig. 4-14) until the audio output waveform amplitude is maximum.

Note:
Both of these adjustment screws should be turned in the same direction at the same angle, less then 30°.

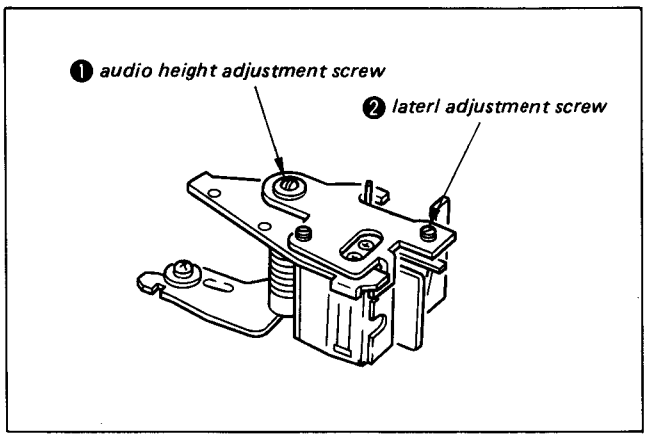

Fig. 4-14

4-3. ADJUSTMENT AFTER REPLACEMENT OF THE CAPSTAN MOTOR

1) Perform the vertical adjustment of the capstan shaft according to 3-6. Replacement and Adjustment of Capstan Motor.
2) Play back the tracking portion of the alignment tape. Connect the oscilloscope as follows:
   1ch: CN703 . . . 3 pin (RP-31 board)
   2ch: CN703 . . . 2 pin (RP-31 board)
3) Turn the tracking control knob clockwise to lower the RF output waveform to about 60% of the maximum.
4) Raise No. 7, 8 guides a little, and check the exit free waveform.
   i) If the exit free waveform is within the range indicated in Fig. 4-15(a), (b), proceed from step 5).

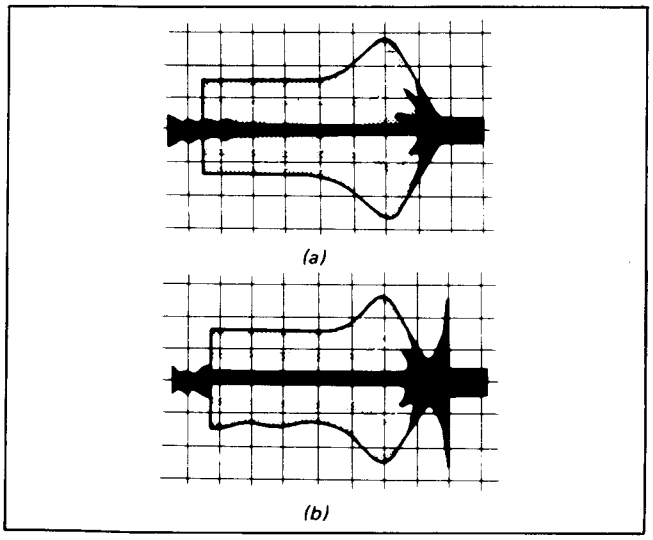

Fig. 4-15

   ii) If the peak of the exit free waveform is smaller than that illustrated in Fig. 4-15(a) (e.g. Fig. 4-16), loosen the lock screw, then turn the capstan adjustment screw until the waveform is within the specified range.

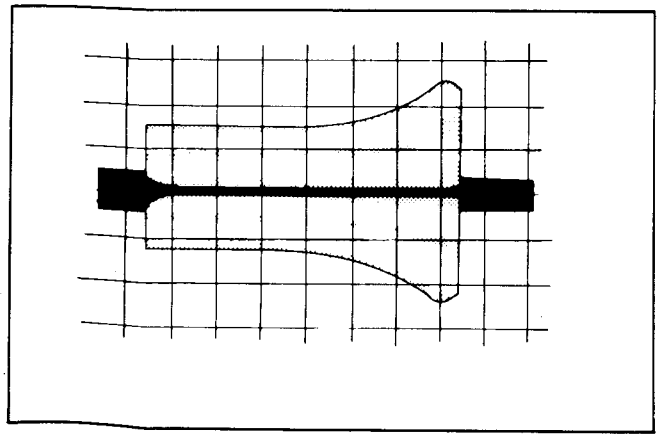

Fig. 4-16

   iii) If the peak shape of the exit free waveform differs from that shown in Fig. 4-15(b) (e.g. Fig. 4-17), loosen the lock screw, then turn the capstan adjustment screw clockwise until the waveform is within the specified range.

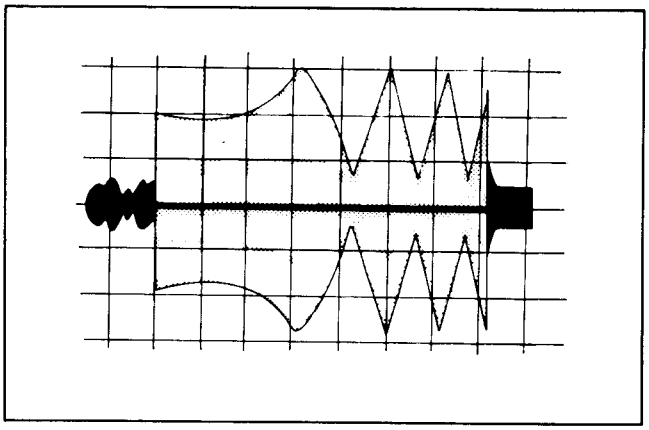

Fig. 4-17

Note:
After turning the capstan adjustment screw wait until the waveform stabilized (about 10 – 15 seconds) before continuing with the adjustment.

5) Lock the capstan lock screw. (Turn clockwise until is stops, then turn about 30° more. At this point, the exit free waveform will change slightly, and if it goes out of the range shown in Fig. 4-15(a), (b) return to step 4) and re-adjust.
6) Flatten the waveform with No. 7 guide, and match No. 8 guide to the tape. If the exit waveform rises, flatten it again with No. 7 guide and match No. 8 guide to the tape again.
7) Confirm and adjust according to 4-1-3, exit side adjustment procedure items 4), 5).

Note:
Check with L830 tape.

4-4. THIN TAPE MOVEMENT CHECK METHOD DURING TAPE PATH ADJUSTMENT

After confirming the tape path by using the procedures of section 4-1 through 4-3, check the thin tape movement by the procedure given below.

1) Prepare one reel of the commercial L-830. Remove the cassette lid with reference to Fig. 4-1.
2) Run L-830 prepared in the procedure 1 in the PLAY mode and check the following points;
   i) Entrance side
   Check if the tape bends and is damaged on the no. 4 guide bottom flange, the no. 5 guide top flange and the no. 6 guide top flange. (The curl of the tape is allowed), but the bend of the tape is not allowed.) (Fig. 4-18)

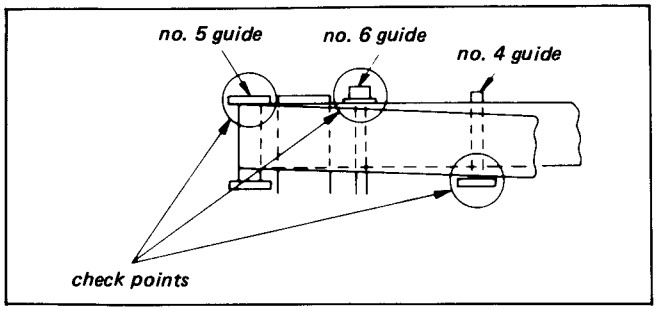

Fig. 4-18

   ii) Exit side
   Check if the tape bends and is damaged on the no. 7 guide top flange, the no. 8 guide top lange and the no. 10 guide top and bottom flanges. (The curl of the tape is allowed, but the bend of the tape is not allowed.) (Fig. 4-19)

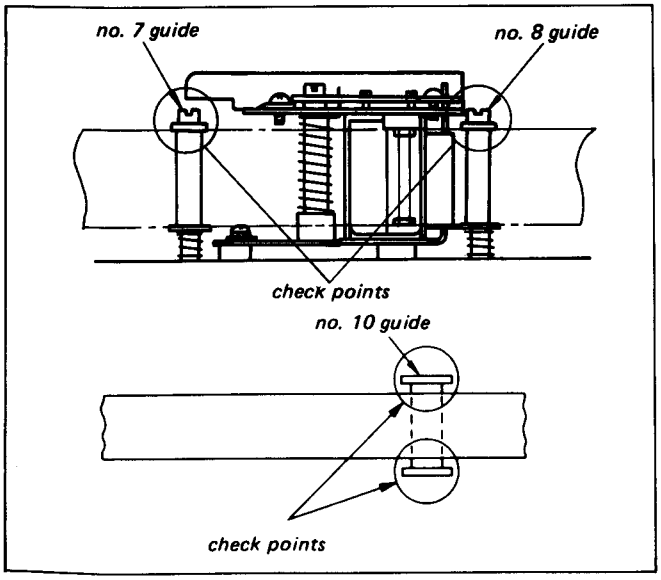

Fig. 4-19

3) If the tape did not run normally in step 2, readjust the tape path by using.
   a) The tape did not run normally on the entrance side, refer to 4-1-2.
   b) The tape did not run normally on the exit side, refer to 4-1-3.

4-5. BETA HI-FI RF OUTPUT WAVEFORM CHECK

1) Set the BETA HI-FI RECORD button inside the front door to the SOUND side.
2) Set both REC slide knobs L and R of the REC level meter to "0".
3) Record in a no-signal state.
4) Play back the recorded part and check that the RF output satisfies the conditions described in Fig. 4-20. (Operate this procedure for both Ach and Bch)

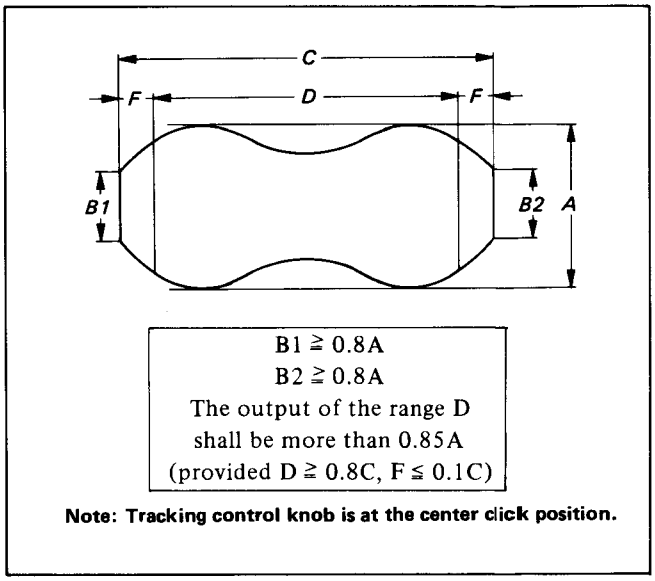

Fig. 4-20

	BOARD	CONNECTOR, TP & PIN No.
RF Output Waveform (Ach)	AF-14	CN002 . . . 1P
RF Output Waveform (Bch)	AF-14	CN002 . . . 2P
External Trigger	AF-14	CN002 . . . 4P

5. ELECTRICAL ADJUSTMENTS

All the electrical adjustment can be performed by using the equipment mentioned below, the alignment tape, and the PAL colour-bar signal (100%).

[Equipment Required]

(1) PAL Colour Monitor TV
(2) Oscilloscope, Dual-trace, Bandwidth ... more than 10 MHz with delay mode
(3) Frequency Counter
(4) PAL Colour-Bar Generator
(5) Digital voltmeter
(6) VOM (20 kΩ/V)
(7) Audio Signal Generator
(8) Audio level meter (VTVM)
(9) Attenuator
(10) Spectrum analyzer
(11) Alignment Tape, type: KR5-2H, Code No. 8-969-995-52
KR5-10C, Code No. 8-192-508-01
(12) Alignment Tool (Adjusting screwdriver for semi-fixed resistors and coils)
Jig No. SL-0001, Code No. J-6080-001-A

[Setup for Adjustment]

The antenna should be connected correctly to the antenna input terminal of the videocassette recorder.
It is important that the video output signal satisfies the specification because the telecast signal received by the incorporated tuner of the videocassette recorder is utilized as the adjustment signal of the machine. The incorporated tuner should be set to the channel with the best reception. The video signal should be checked with an oscilloscope connected to VIDEO OUT (BNC connector). Verify that the sync signal amplitude is approx. 0.3 Vp-p and the video signal amplitude is approx. 0.7 Vp-p at peak. Adjust the fine tuning while observing the signal and the TV screen so that the burst signal amplitude becomes approx. 0.3V ± 0.1 Vp-p. Also confirm that there is not spikes observed at the sync signal portion. (See Fig. 5-1.)
The video (colour-bar) signal for the adjustment is shown in Fig. 5-1.

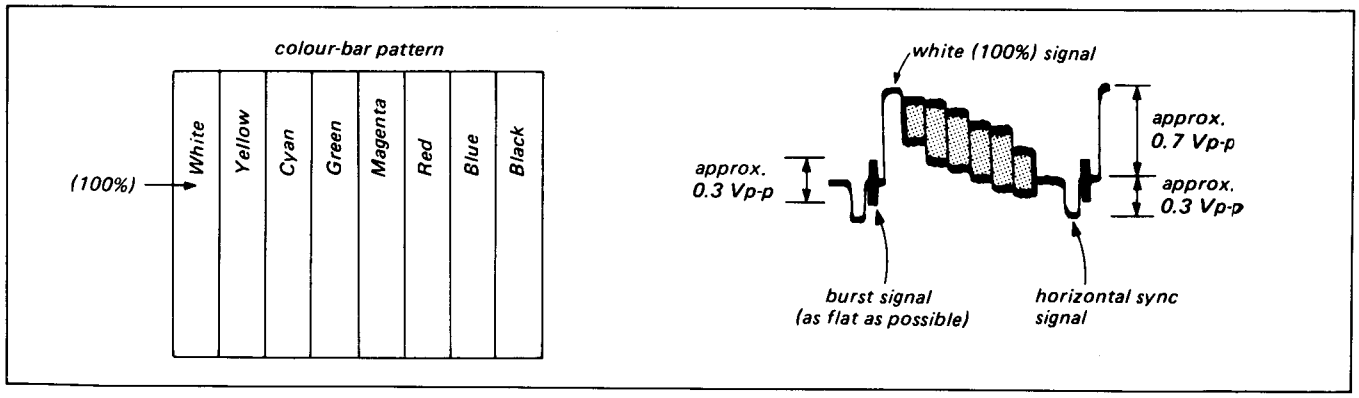

Fig. 5-1. Video (colour-bar) signal

[Alignment Tape]

KR5-2H

	Video signal	Audio signal	Playing time	Use for
1.	Colour-bars	3 kHz – 5 dB	5 min	General performance, tape speed checks, switching position adjustment.
2.	Monoscope	333 Hz – 25 dB	5 min	Video head dihedral, audio level adjustment.
3.	RF sweep	5 kHz – 25 dB	5 min	Video, audio frequency characteristics, audio azimuth adjustment. marker: 1, 2, 3.58, 4.5, 5.2 MHz
4.	Tracking 1 MHz (CH-B) *1 (Channel B is inserted in every 3 frames.)	1 kHz – 5 dB *2 (Signal is dropped out in the positions where channel B is inserted.)	5 min	Tracking, Audio height adjustments CTL Position check. (Check if *1 and *2 are the same position.)

KR5-10C (Beta hi-fi Audio)

	Video signal	Audio signal	Playing time	Use for
	Colour-bars	Beta hi-hi 400 Hz ±66.7 kHz DEV	30 min	Beta hi-fi Audio level, balance adjustment.

[Alignment Tool for Semi-fixed Variable Resistors and Coils]

Semi-fixed variable resistors and inductances should be adjusted with the alignment tool exclusively prepared for the adjustment of the components. A common screwdriver is too large for adjusting the components from the conductor side of a printed circuit board.

The metal blade of the alignment tool is used for variable resistors and trimmer capacitors and the plastic tip is used for variable inductances.

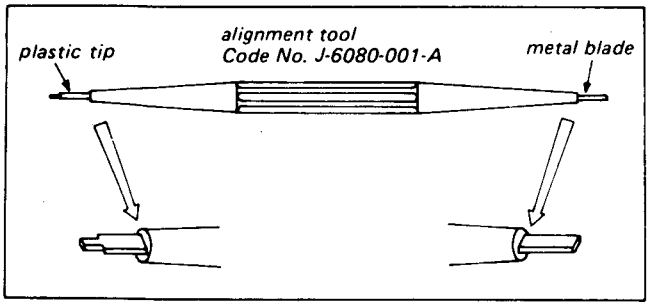

Fig. 5-2. Alignment tool

[Required Levels and Impedances of Input and Output]

Video

Input VIDEO IN: BNC connector
1.0 V (p-p) $^{+1.0}_{-0.5}$ V (p-p)
75 ohms, unbalanced,
sync negative

Output VIDEO OUT: BNC connector
1.0 V (p-p) ±0.1 V (p-p)
75 ohms, unbalanced,
sync negative

Audio

Inputs AUDIO IN: 2 phono jacks
47 kilohms, −10 dBs
(0 dBs = 0.775 V rms)
Microphone: −60 dBs, for low-impedance microphone

Outputs AUDIO OUT: 2 phono jacks
Load impedance less than 10 kilohms
−10 dBs with 47 kilohms load,
unbalanced
Headphones: Stereo phone jack
−26 dBs, 8 ohms

[Colour-Bar Signal]

The 100% colour-bar signal recorded on the Alignment tape is shown in Fig. 5-3.

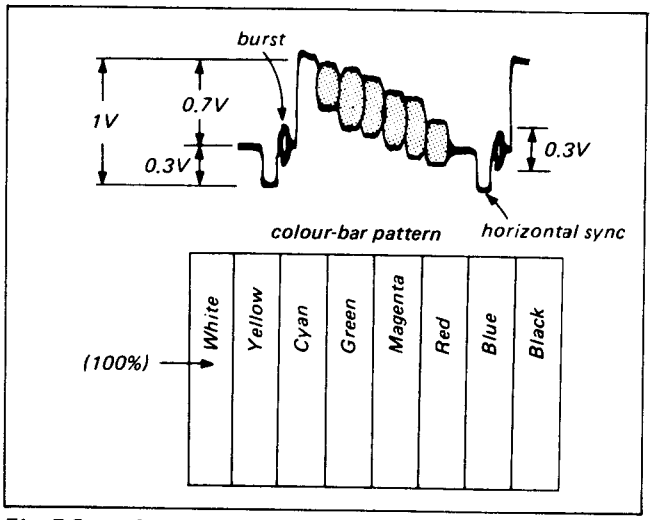

Fig. 5-3. Colour-bar signal recorded on the alignment tape

[75 Ω Terminating Method]

To terminate the video output terminal follow the steps shown in Fig. 5-4.

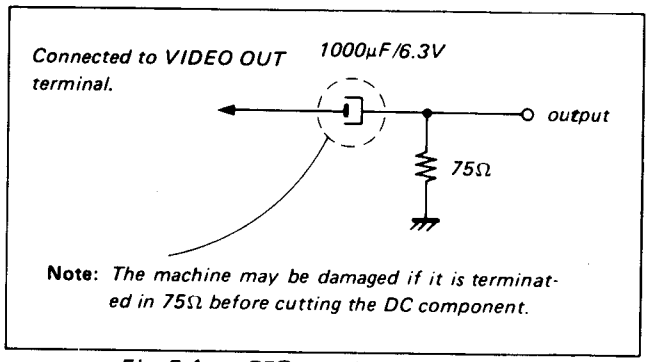

Fig. 5-4. 75Ω terminating circuit

[Adjustment procedure]

Adjust in the order given below.

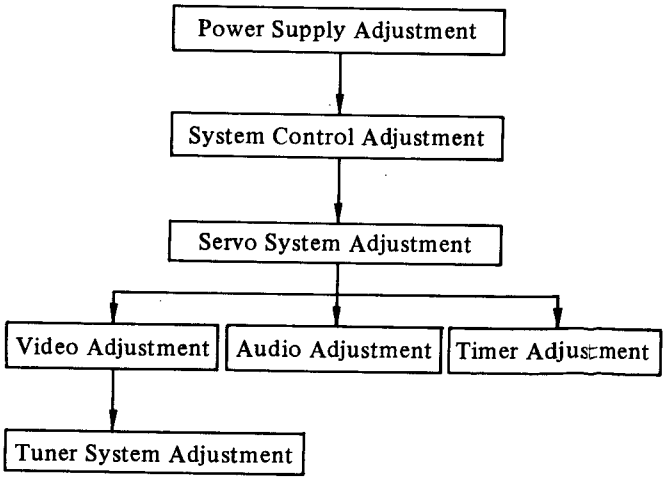

5-1. POWER SUPPLY CHECK (CN Board (SR-21))

Measure in E-E mode (power supply switch ON)

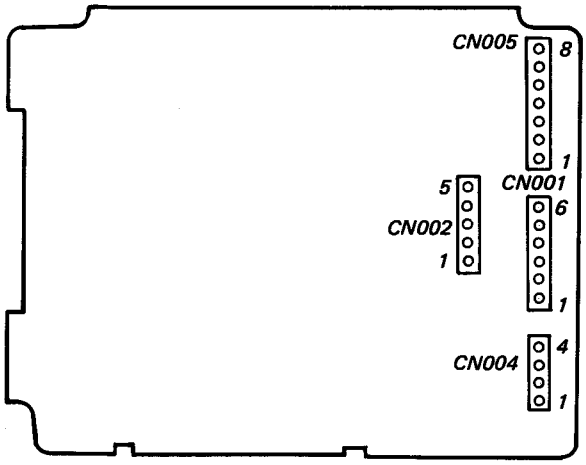

Fig. 5-5. Component layout

1. AC 6 V Check
   Pin (1) of CN004 shall be 6 ±0.5 V ac
2. Switched 12 V Check
   Pin (1) of CN005 shall be 12.2 ±0.2 V dc
3. Switched 12 V (M) Check
   Pin (5) of CN005 shall be 12.2 ±0.2 V dc
4. Switched 12 V (C) Check
   Pin (7) of CN005 shall be 12.2 ±0.2 V dc
5. Switched 9 V Check
   Pin (3) of CN005 shall be 9.0 ±0.2 V dc
6. Unswitched 42 V Check
   Pin (1) of CN001 shall be 42 ±3 V dc
7. Unswitched 12 V Check
   Pin (3) of CN002 shall be 12.2 ±0.5 V dc
8. Unswitched 5.8 V Check
   Pin (1) of CN005 shall be 5.8 ±0.3 V dc
9. Unswitched −30 V Check
   Pin (4) of CN004 shall be −30 ±3 V dc

5-2. SYSTEM CONTROL CHECK (SS-50 Board)

5-2-1. Clock Frequency Check

Mode: E-E
Signal: None
Frequency counter: Pin (62) of IC101
Check: f: 4 MHz

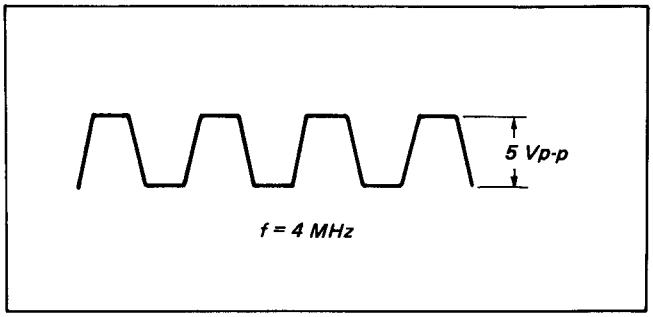

Fig. 5-6. Clock frequency check

5-2-2. Charactor Generator Clock Frequency Check

Mode: E-E
Signal: (1) monoscope, (2) colour-bar

Note: Make this adjustment more than 3 minute after turning on the power switch.

(1) Adjustment Method for Monoscope Pattern

While the counter displays a signal, adjust RV101 so that the right end of the counter display blanking part is aligned with the fifth line from the central vertical line of the monoscope picture. (See Fig. 5-7.)

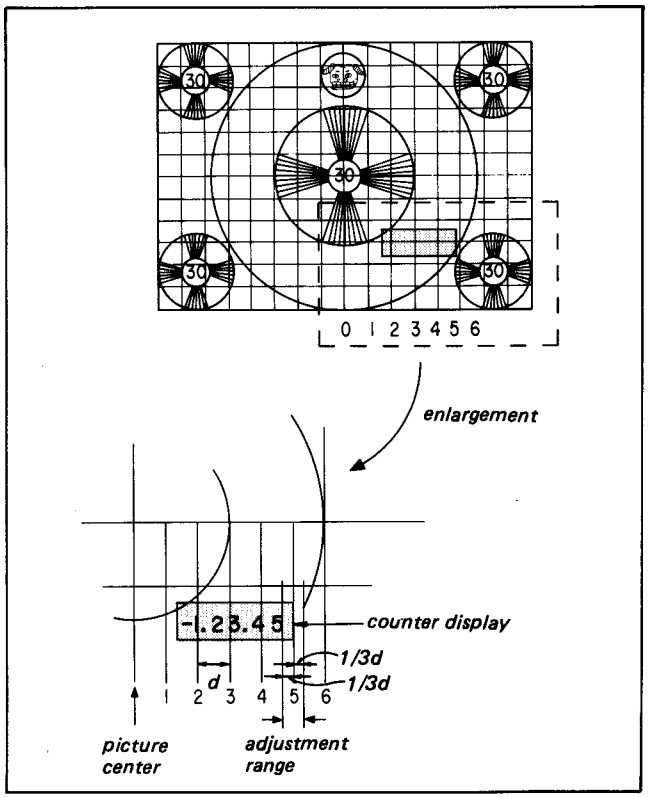

Fig. 5-7. Character generated clock frequency

Adjust the right end so that it comes within ±1/3 division from the fifth line.

(2) Adjustment Method for Color-bar Pattern

While the counter displays a signal, adjust RV101 so that the center fo the second digit from the right end of the counter display blanking part aligns with the boundary line between RED and BLUE of the color-bar. (See Fig. 5-8.)

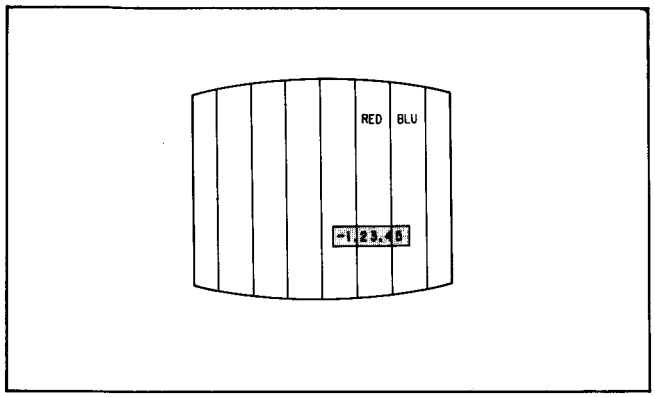

Fig. 5-8. Charactor generator clock frequency check

5-3. SERVO SYSTEM ADJUSTMENT

Adjustment Sequence

1. Drum servo system adjustment
2. Capstan servo system adjustment

5-3-1. Drum Servo System Adjustment

1) Drum Free Speed Adjustment (SS-50 Board)

Mode: Record

Oscilloscope: TP305 (Pin (46) of IC301)

[Adjustment method]

Adjust to 1.8 ±0.1 V with RV306. (See Fig. 5-9.)

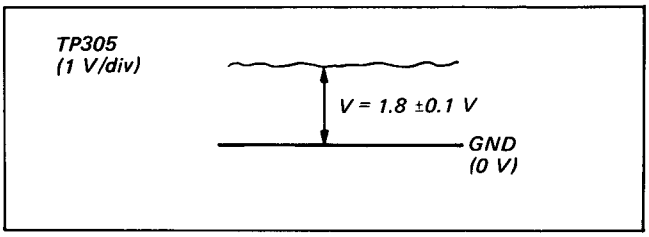

Fig. 5-9. Drum free speed adjustment

2) LOCK Phase Adjustment (SS-50 Board)

Mode: Record

Oscilloscope: CH-1 TP304 (RF SW PULSE)
CH-2 TP307 (COMP SYNC)

[Adjustment method]

Adjust to T=7.0 ±0.5 H (448 ±32 μsec) with RV305. (See Fig. 5-10.)

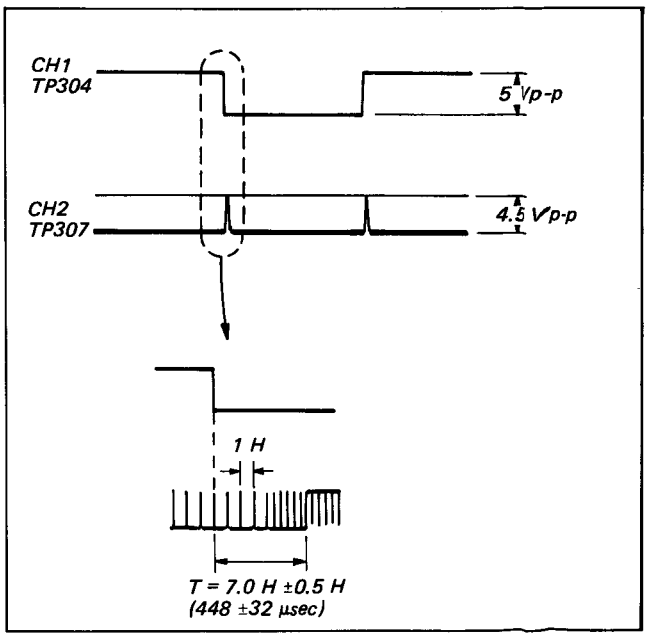

Fig. 5-10. LOCK phase adjustment

3) RF Switching Position Adjustment (SS-50 Board)

Mode: Record
Signal: Alignment tape colour-bar or monoscope
Oscilloscope: CH-1 TP304 (Pin (34) of IC301)
(RF SW PULSE)
CH-2 Pin (1) of CN309 (DRUM PG)

[Adjustment method]

i) PG (A) Edge
Adjust to 900 ±30 μsec with RV303.
(See Fig. 5-11 (a))

ii) PG (B) Edge
Adjust the duty cycle of RF SW PULSE to 50% ±5 μsec.

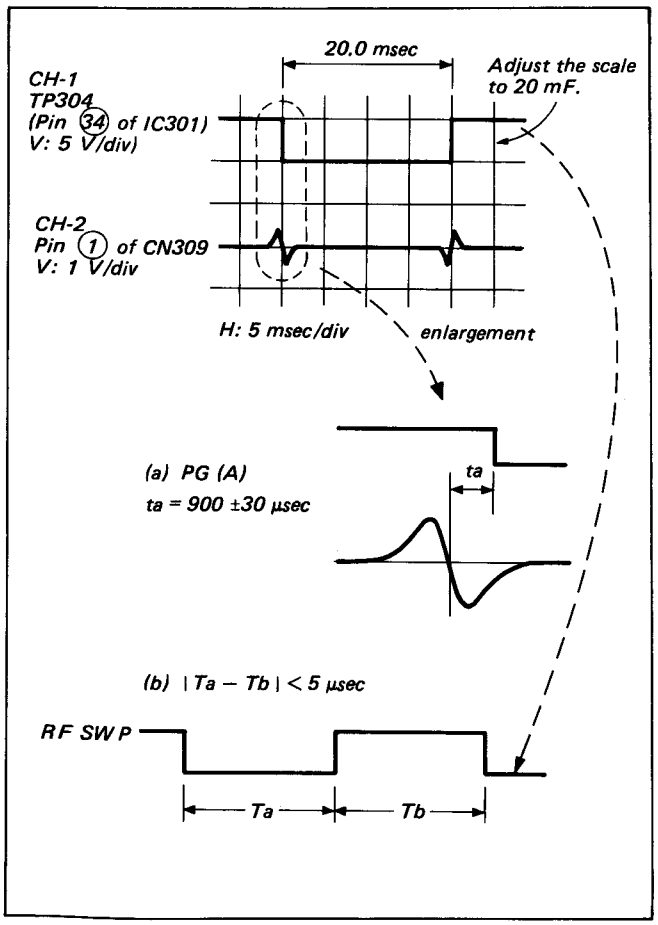

Fig. 5-11. RF switching position adjustment

5-3-2. Capstan Servo System Adjustment

1) Capstan Free Speed Adjustment (SS-50 Board)

Mode: Recrod
Oscilloscope: TP302

[Adjustment method]

Adjust to 1.8 ±0.1 V with RV302. (See Fig. 5-12.)

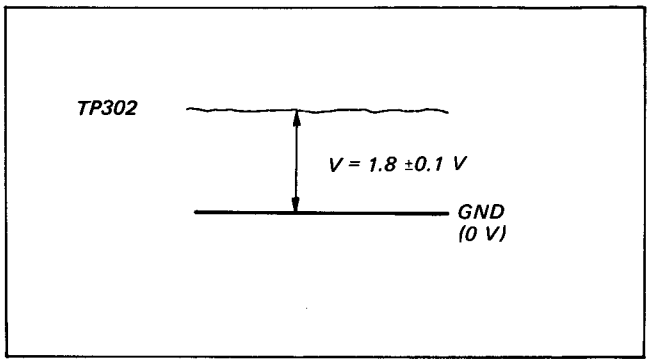

Fig. 5-12. Capstan free speed adjustment

2) Tracking Center Adjustment (SS-50 Board)

Mode: Record
Signal: Colour-bar
Oscilloscope: CH-1 TP306 (REC CTL)
CH-2 TP301 (TRACON)

[Adjustment method]

i) Set the TRACKING knob to the center click position.

ii) Adjust to 7.2 ±0.05 msec with RV301.
(See Fig. 5-13.)

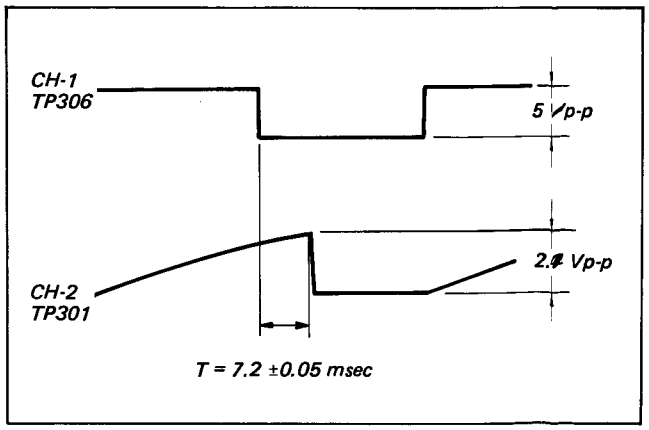

Fig. 5-13. Tracking center adjustment

3) STILL f_H Correction Adjustment (SS-50 Board)

Mode: Playback – PAUSE
Signal: Alignment tape colour-bar or monoscope
Oscilloscope: TP307 (COMPOSITE SYNC)

[Adjustment method]

Adjust to 63.95 ±0.05 μsec with RV308.
(See Fig. 5-14.)

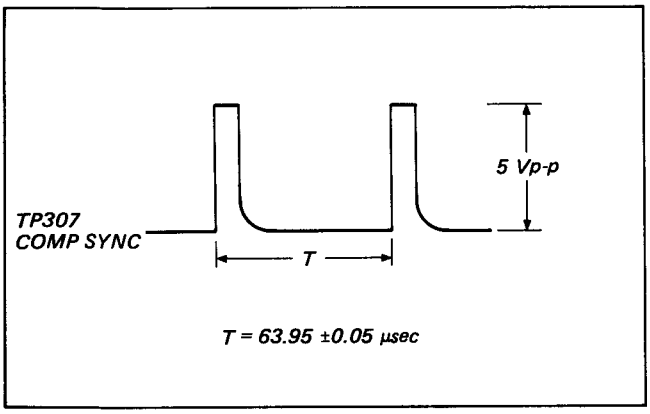

Fig. 5-14. STILL fH correction adjustment

4) CUE f_H Correction Adjustment (SS-50 Board)

Mode: PB x 9 or CUE
Signal: Alignment tape colour-bar or monoscope
Oscilloscope: TP307 (COMPOSITE SYNC)

[Adjustment method]

Adjust to 63.95 ±0.05 μsec with RV307.
(See Fig. 5-15.)

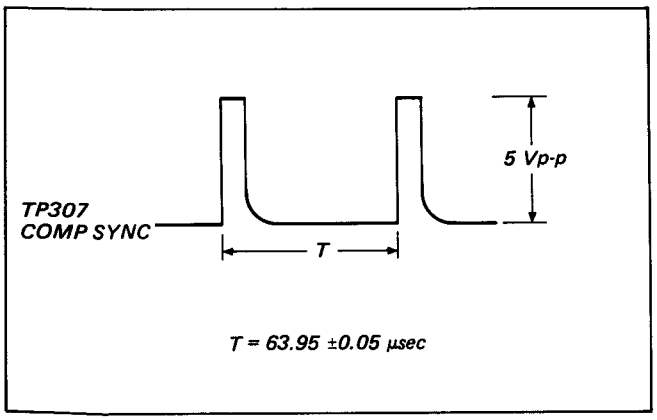

Fig. 5-15. CUE fH correction adjustment

5) Slow f_H Correction Adjustment (SS-50 Board)

Mode: a) 1/5 SLOW (REV)
b) 1/5 SLOW (FWD)
Signal: Alignment tape colour-bar or monoscope
Oscilloscope: TP307 (COMP SYNC)

[Adjustment method]

Adjust the COMP SYNC signal fluctuation width so that it is minimized by alternately operating RV602 and RV604 for a) and RV601 and RV603 for b).
(See Fig. 5-16.)

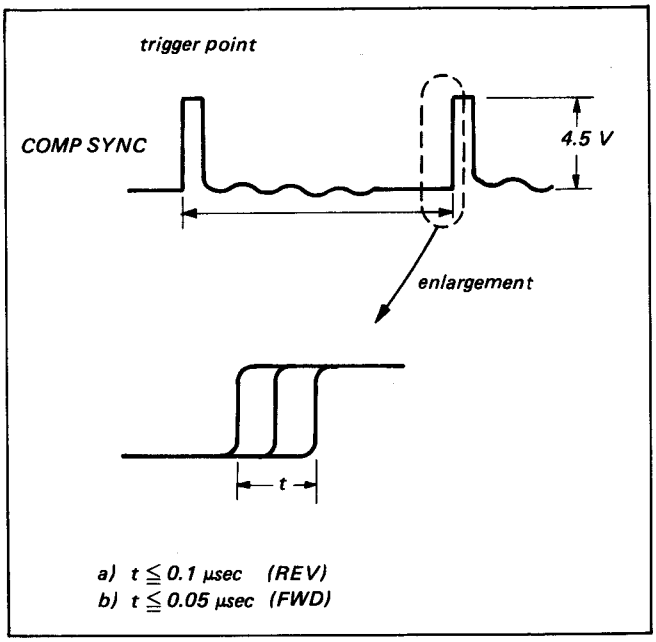

Fig. 5-16. Slow fH correction adjustment

6) Slow Tracking Control Adjustment (SS-50 Board)

Mode: a) 1/5 Slow Tracking Control (FWD)
b) 1/5 Slow Tracking Control (REV)
Signal: None
Oscilloscope: CH-1 Pin ③ of CN703.
RP-31 BOARD (RF OUT)
CH-2 Pin ② of CN703.
RP-31 BOARD (RF SW PULSE)

[Adjustment method]

i) Set the TRACKING knob to the center click position.
ii) Set up the RECORD mode, then playback the recorded part at 1/5 Slow (FWD) and 1/5 Slow (REV).
iii) Adjust mode a) by RV315 and mode b) by RV316 so that the CH-1 waveform peak comes to the censter of A CH.

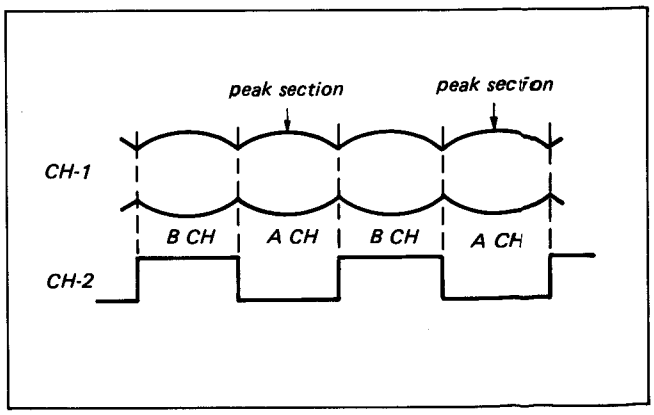

Fig. 5-17. Slow tracking control adjustment

7) QVD Adjustment (SS-50 Board)

Mode: PB x 1
Signal: Alignment tape colour-bar or monoscope
Oscilloscope: CH-1 Pin ④ of CN114
CH-2 TP304 (RF SW PULSE)

[Adjustment method]

Adjust T_2 by RV103 so that T_2 is equal to T_1.
(See Fig. 5-18.)

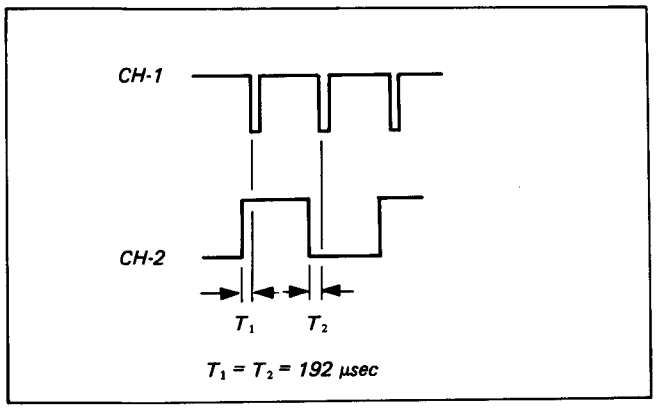

Fig. 5-18. QVD adjustment

5-4. PAL VIDEO SYSTEM ADJUSTMENT

As a rule, first the playback system is adjusted with an alignment tape to check that it operates normally, then the recording system is adjusted.
The adjustment sequence is shown below. The Y signal and chroma signal systems are adjusted for both playback and recording systems.
Colour video signal supplied by the PAL colour-bar generator is used as video input signal for video system adjustment in the record mode. Check that the sync and colour burst signals conform to the specifications designated in "Set-up for Adjustment" in Fig. 5-1.

[Record System Adjustment]

1) AGC adjustment
2) Carrier set adjustment
3) Deviation adjustment
4) Compress adjustment
5) Peak clip adjustment
6) Carrier shift adjustment
7) White clip adjustment
8) Dark clip adjustment
9) Current reducing adjustment
10) Y record current adjustment
11) 4.43 MHz REF adjustment
12) AFC adjustment
13) AFC offset adjustment
14) Pilot burst signal level adjustment
15) Peak Acc adjustment
16) Chroma record current adjustment

[Playback System Adjustment]

1) Playback frequency characteristic adjustment
2) Expand adjustment
3) Playback video level adjustment
4) Y-comb adjustment
5) Dropout compensator adjustment
6) Carrier balance adjustment
7) Chroma comb filter adjustment
8) JOG PLL adjustment
9) JOG exchange chroma level adjustment
10) Shift adjustment

5-4-1. Record System Adjustment

1) AGC Adjustment (YC-40 Board)

Mode: E-E
Oscilloscope: VIDEO OUT
Signal: GRAY SCALE

[Adjustment method]

Adjust to 1 ±0.05 Vp-p with RV021.

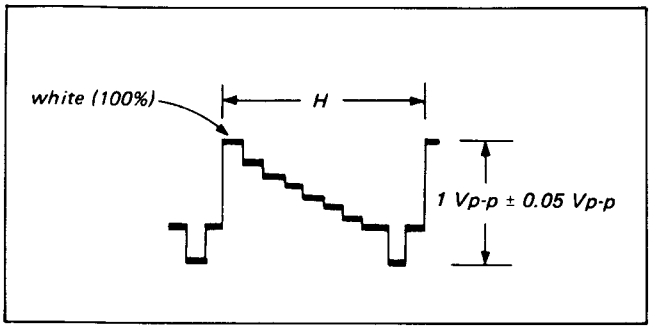

Fig. 5-19. Peak AGC adjustment

2) Carrier Set Adjustment (YC-40 Board)

Mode: E-E
Signal: None
Oscilloscope: Pin (25) of IC009

[Adjustment method]

i) Set up the input select to LINE/PCM mode.
ii) Adjust to 3.8 ±0.038 MHz with RV014.

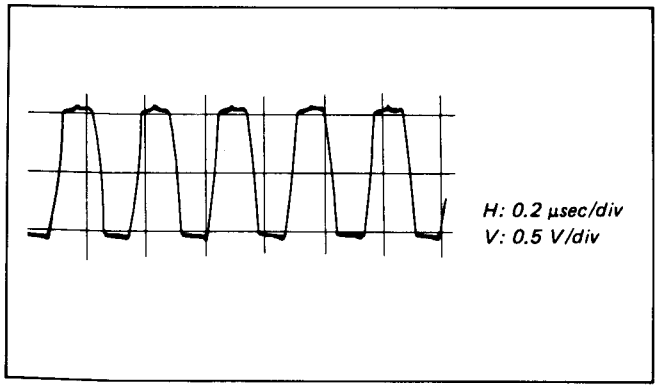

Fig. 5-20. Carrier set adjustment

3) Deviation Adjustment (YC-40 Board)

- The playback system adjustment and the carrier set adjustment in Paragraph 2) above must be completed before making this adjustment.

Mode: Self-recording and playback
Signal: Colour-bar
Oscilloscope: VIDEO OUT

[Adjustment method]

i) Supply the colour-bar signal and set up E-E mode.
ii) Connect the oscilloscope to VIDEO OUT.
iii) Set up RECORD mode.
iv) Playback the recorded section of the tape.
v) Check that the video signal level is 1.0 Vp-p ±0.05 Vp-p, if the level is outside of this range, repeat Steps iii) through iv) above adjusting with RV015 until the standard value is obtained.

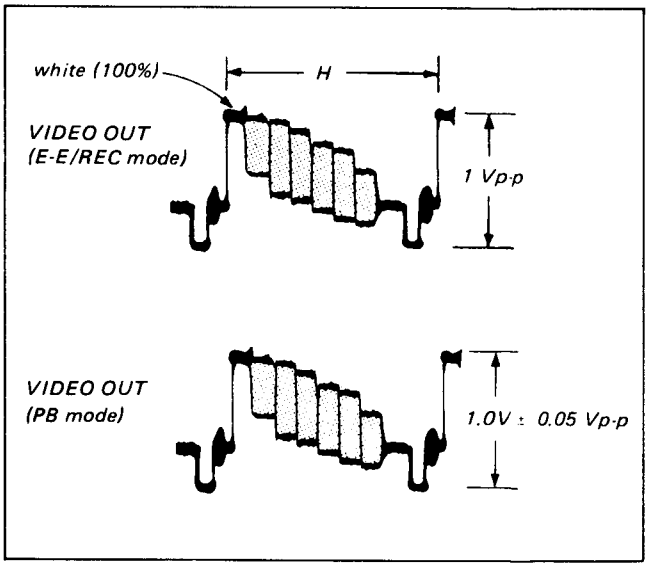

Fig. 5-21. Deviation adjustment

4) Compress Adjustment (YC-40 Board)

Mode: E-E
Signal: None
Digital voltmeter: See Fig. 5-22.

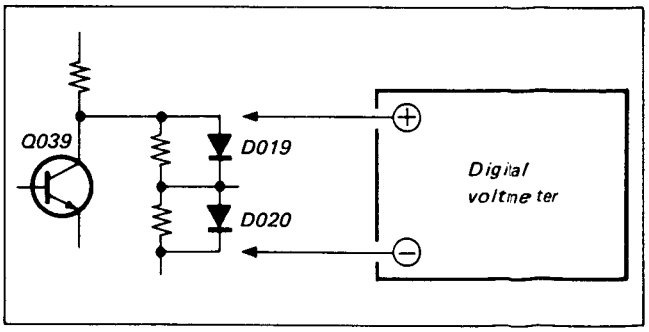

Fig. 5-22.

[Adjustment method]

i) Rotate RV013 counterclockwise full seen from the pattern side.
ii) Adjust to 0.30 ±0.01 V dc using RV016.

Note:

Make this adjustment more than 30 sec after turning on the power switch. Make sure to adjust 7) WHITE CLIP adjustment.

5) Peak Clip Adjustment (YC-40 Board)

Mode: E-E
Signal: White (100%)
Digital voltmeter: Base of Q837

[Adjustment method]

In the Q041 base, the DC level of 100% white is considered as Vp. Adjust the Q837 base DC level by RV022 so that it is equal to Vp + 0.5 ±0.05 V dc. (See Fig. 5-23.)

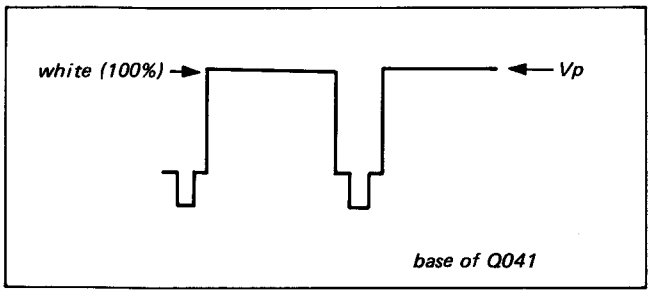

Fig. 5-23. Peak clip adjustment

6) Carrier Shift Adjustment (YC-40 Board)

Mode: E-E
Signal: None
Oscilloscope: Pin (25) of IC009

[Adjustment method]

i) Set up the input select to LINE/PCM and Super Beta PRO mode.
ii) Adjust to 4.3 ±0.04 MHz with RV702.

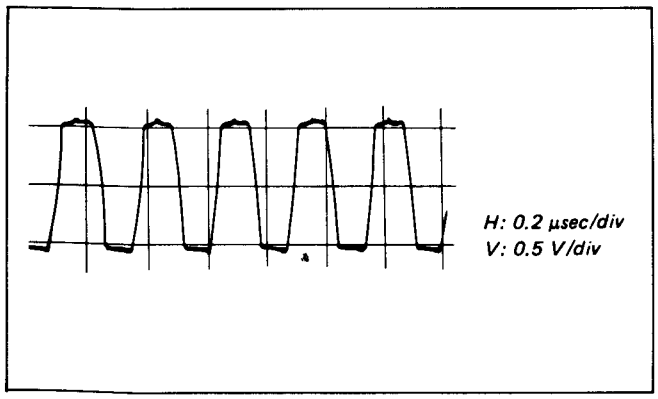

Fig. 5-24. Carrier shift adjustment

7) White Clip Adjustment (YC-40 Board)

Mode: E-E
Signal: Colour-bar
Oscilloscope: Collector of Q038

[Adjustment method]

Set up the PRO mode and adjust to white peak 240 ±10% with RV013. (See Fig. 5-25.)

8) Dark Clip Adjustment (YC-40 Board)

Mode: E-E
Signal: Colour-bar
Oscilloscope: Collector of Q038

[Adjustment method]

Set up the Super Beta PRO mode and adjust to Sync peak 110 ±10% with RV024. (See Fig. 5-25.)

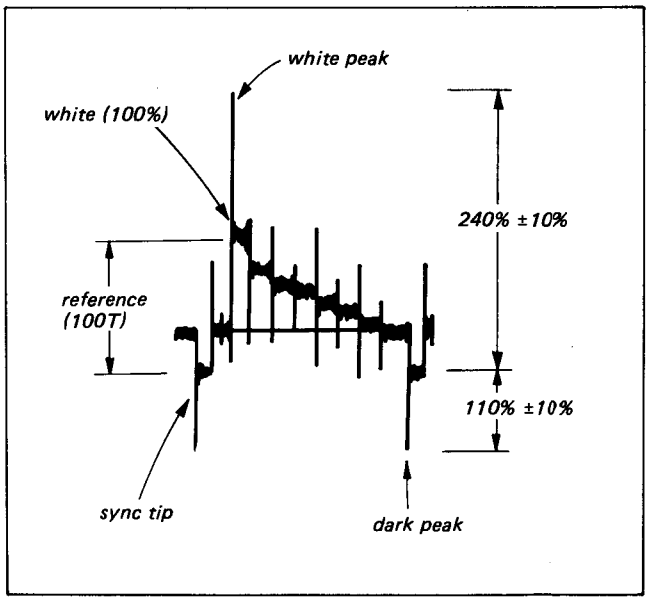

Fig. 5-25. Dark clip and white clip adjustment

9) Current Reducing Adjustment (DH-4 Board)

Mode: Record (PRO mode)
Signal: None
Oscilloscope: TP504

[Adjustment method]

In TP504, adjust the difference in value between E-E mode and RECORD mode by RV501 so that it is equal to 0 ±0.1 Vp-p.

10) Y Record Current Adjustment (DH-4 Board)

Mode: Record
Signal: None
Oscilloscope: TP501 (Pin ② of CN507)

[Adjustment method]

Adjust to 2.05 ±0.1 Vp-p with RV302.
(See Fig. 5-26.)

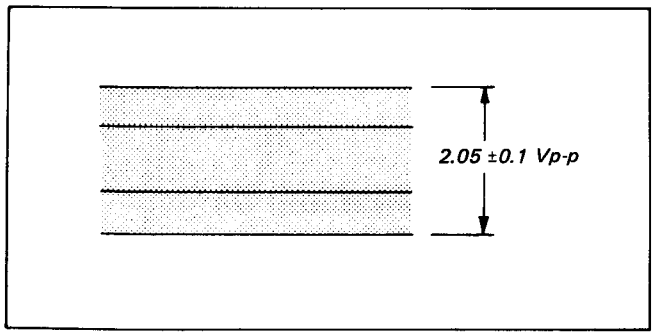

Fig. 5-26. Y record current adjustment

Note:
Repeat items 9) and 10) until each of them complies with its standard.

11) APC Adjustment (YC-40 Board)

Mode: Playback
Signal: Colour-bar
Frequency counter: Pin ⑭ of IC006

[Adjustment method]

Adjust to 4.433619 MHz ±5 Hz with CV001.

12) AFC Adjustment (YC-40 Board)

Mode: E-E
Signal: None
When Pin ③ of CN004 is 5 V, apply 4.5 V dc to Pin ㉖ of IC006.
Frequency counter: Pin ㉑ of IC006

[Adjustment method]

i) Adjust the counter by RV007 to 5.515 MHz ±0.02 MHz.
ii) Confirm item 13).

13) AFC Offset Adjustment (YC-40 Board)

Mode: Record
Signal: Colour-bar
Oscilloscope: Pin ㉖ of IC006

[Adjustment method]

i) Adjust RV006 so that the fluctuation of DC level is minimum. (See Fig. 5-27.)
ii) Confirm item 12).

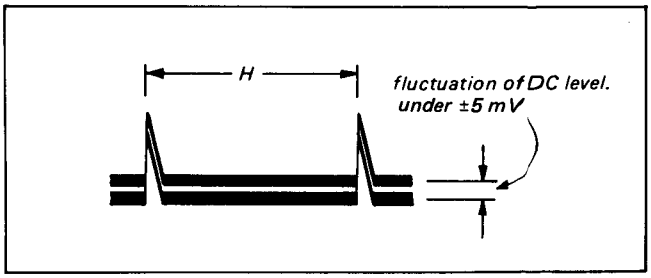

Fig. 5-27. AFC offset adjustment

Note:
Repeat items 12) and 13) until each of them complies with its standard.

14) Pilot Burst Signal Level Adjustment (YC-40 Board)

Mode: E-E
Signal: Colour-bar
Oscilloscope: Pin (1) of IC006

[Adjustment method]

Adjust the pilot burst signal with the chroma signal level using RV009.

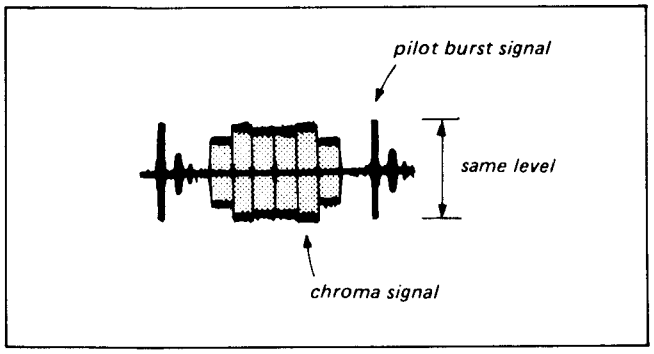

Fig. 5-28. Pilot burst signal level adjustment

15) Peak Acc Adjustment (DH-4 Board)

Mode: E-E
Signal: Colour-bar
Oscilloscope: Emitter of Q304

[Adjustment method]

Adjust to 2.0 ±0.1 Vp-p with RV301. (See Fig. 5-29.)

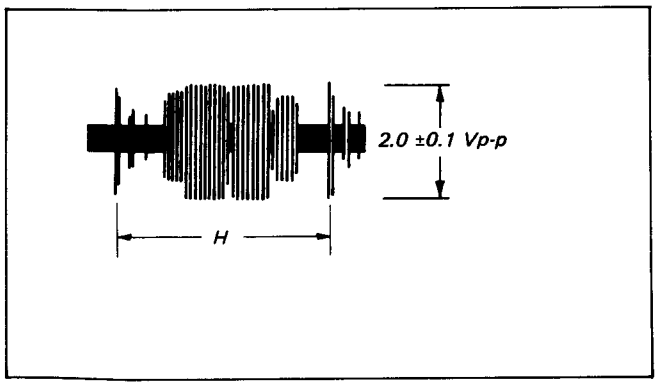

Fig. 5-29. Peak Acc adjustment

16) Chroma Record Current Adjustment (YC-40 Board)

Mode: Record (PRO mode)
Signal: Colour-bar
Oscilloscope: Emitter of Q310 on DH-4 board.

[Adjustment method]

Adjust to 130 ±10 mVp-p with RV008.

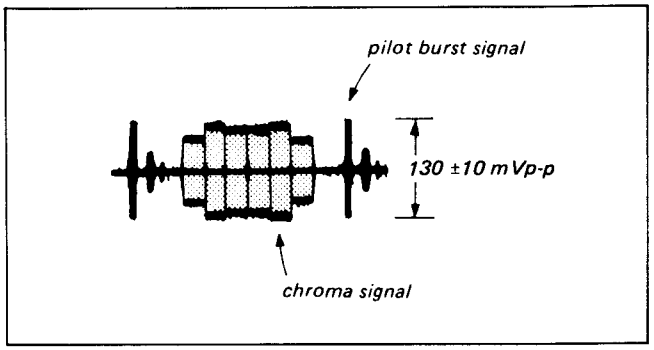

Fig. 5-30. Chroma record current adjustment

Note:

Make sure to adjust 9) Current Reducing Adjustment and 15) Peak Acc Adjustment.

5-4-2. Playback System Adjustment

1) Playback Frequency Characteristic Adjustment (RP-31 Board)

- Adjust both the A and B channels.
  The B channel indicated by ( ).
  Mode: Playback
  Signal: RF sweep
  Oscilloscope: Pin (3) of CN703
  External trigger: Pin (5) of CN703

[Adjustment method]

i) Rotate the tracking knob to make 2 MHz to be maximum.
ii) Rotate RV704 to adjust the 2 MHz level of B-ch to be less than ±20 mV to the 2 MHz level of A-ch.
iii) Set the trigger slope to −(+).
iv) Adjust the 5.2 MHz amplitude to 52 − 59% of the 2 MHz amplitude with RV702 (RV701).

- Adjust the A′ channels.
  Mode: Playback
  Signal: RF sweep
  Oscilloscope: Pin (3) of CN703
  External trigger: Pin (5) of CN703

Note:
Apply 5 V dc to Pin (1) of CN703.
Short between Pin (1) and (2) of CN307.

[Adjustment method]

i) Rotate the tracking knob to make 2 MHz to be maximum.
ii) Adjust 2 MHz level of A′-ch by RV705 so that it is 75 ±5% of that of A-ch.

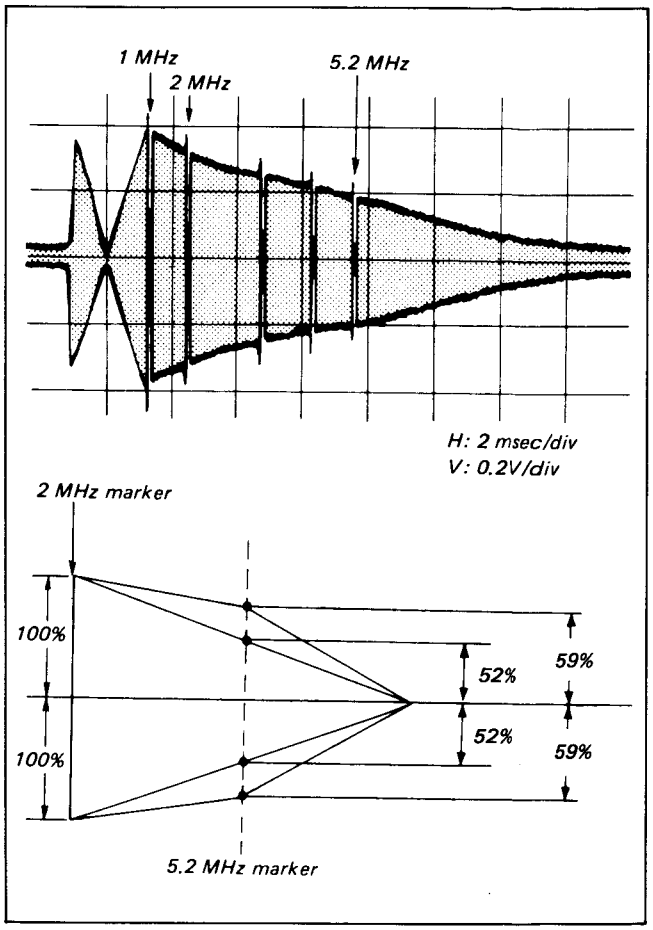

Fig. 5-31. Playback amplifier frequency characteristic adjustment

2) Expand Adjustment (YC-40 Board)

Mode: Playback
Signal: Colour-bar
Digital voltmeter: See Fig. 5-32.

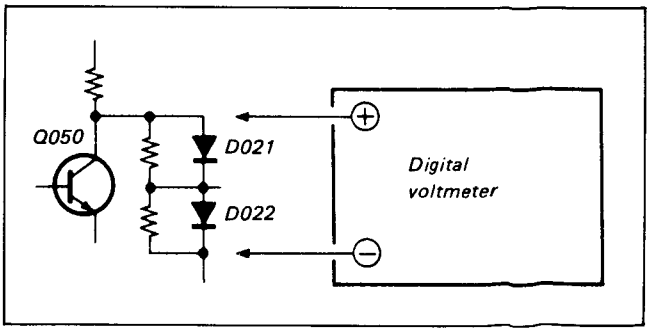

Fig. 5-32.

[Adjustment method]

Adjust to 0.3 ±0.01 V dc using RV020.

Note:
Adjust more than 30 sec after playback.

3) Playback Video Level Adjustment (YC-40 Board)

Mode: Playback
Signal: Colour-bar
Oscilloscope: VIDEO OUT

[Adjustment method]

Adjust to 1.0 V ±0.05 Vp-p with RV019.

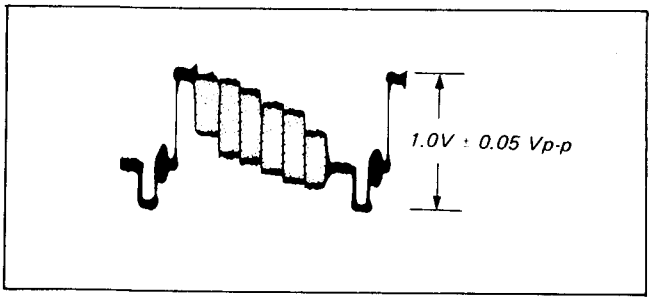

Fig. 5-33. Playback video level adjustment

4) Y-Comb Adjustment (YC-40 Board)

Mode: Playback
Signal: Colour-bar
Oscilloscope: Pin (8) of IC401

[Adjustment method]

Rotate RV401 to adjust so that the limiter works vertically symmetrically. (See Fig. 5-34.)

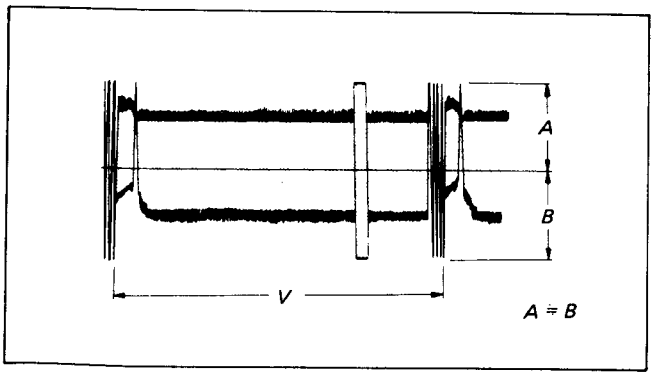

Fig. 5-34. Y-comb adjustment

5) Dropout Compensator Threshold Adjustment (YC-40 Board)

Mode: Playback
Signal: Colour-bar
Digital voltmeter: Pin (26) of IC009

[Adjustment method]

Adjust to 0.26 ±0.02 V dc with RV010.

6) Carrier Balance Adjustment (YC-40 Board)

Mode: Playback
Signal: Colour-bar
Adjust while observing the monitor TV screen.

[Adjustment method]

Minimize beats with RV005.

7) Chroma Comb Filter Adjustment (YC-40 Board)

Mode: Playback
Signal: Colour-bar
Adjust while observing the monitor TV screen.

[Adjustment method]

Minimize beats with RV501 and LV501.

8) JOG PLL Adjustment (YC-40 Board)

Mode: E-E
Signal: Colour-bar
Oscilloscope: Pin (10) of IC003

[Adjustment method]

Adjust to 20 ±1 μsec with RV003.
(See Fig. 5-35.)

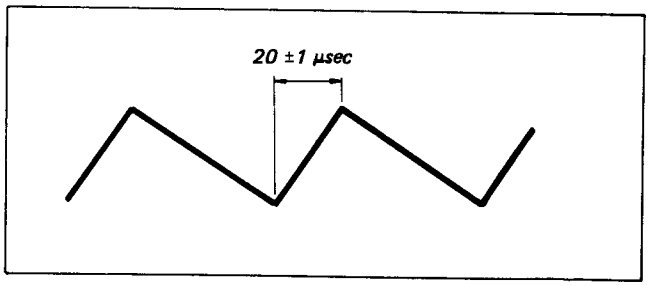

Fig. 5-35. JOG PLL adjustment

9) JOG Exchange Chroma Level Adjustment (YC-40 Board)

Mode: Playback – PAUSE (STILL)
Signal: Colour-bar
Osciiloscope: Pin (8) of IC003

[Adjustment method]

Adjust RV002 so that the fluctuation of level is minimum. (See Fig. 5-36.)

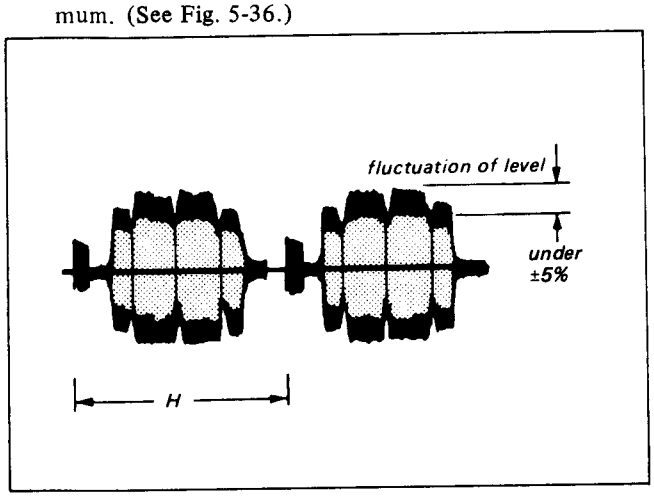

Fig. 5-36. JOG EXCH. C. level adjustment

10) Shift Adjustment (YC-40 Board)

Mode: Playback – PAUSE (STILL)
Signal: Alignment tape colour-bar
Oscilloscope: Pin (23) and (24) of IC003

[Adjustment method]

Adjust to the signal level (per 1H) with RV004.

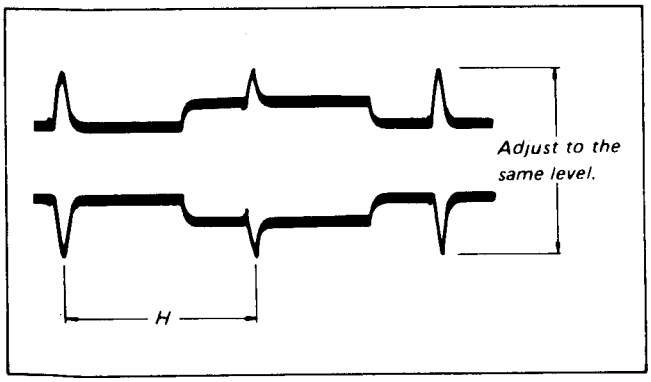

Fig. 5-37. Shift adjustment

5-5. SECAM VIDEO SYSTEM ADJUSTMENT (ES MODEL)

- Make this adjustment after adjusting the PAL video system.
- For this adjustment, use the equipment listed below in conjunction with an alignment tape and SECAM colour-bar signals.

[Equipment Required]

(1) SECAM Colour Monitor TV
(2) Oscilloscope, Dual-trace, Bandwidth . . . more than 10 MHz with delay mode
(3) SECAM Colour-Bar Generator
(4) Alignment Tape, Type: KR5-1J, Code No. 8-969-996-03

[Setup for Adjustment]

In this adjustment, video signals obtained from the pattern generator will be used as adjustment signals. Therefore, the video output signals should be within the specifications. Verify video signals by connecting an oscilloscope to VIDEO OUT connector (75 Ω terminated). Check that the video signals are flat when the amplitude of the horizontal sync signal is about 0.3 Vp-p, the amplitude of the video portion is about 0.7 Vp-p, and the amplitude of the burst signal is about 0.3 Vp-p.
The video signal (colour-bar signal) used in this adjustment is shown in Fig. 5-38.

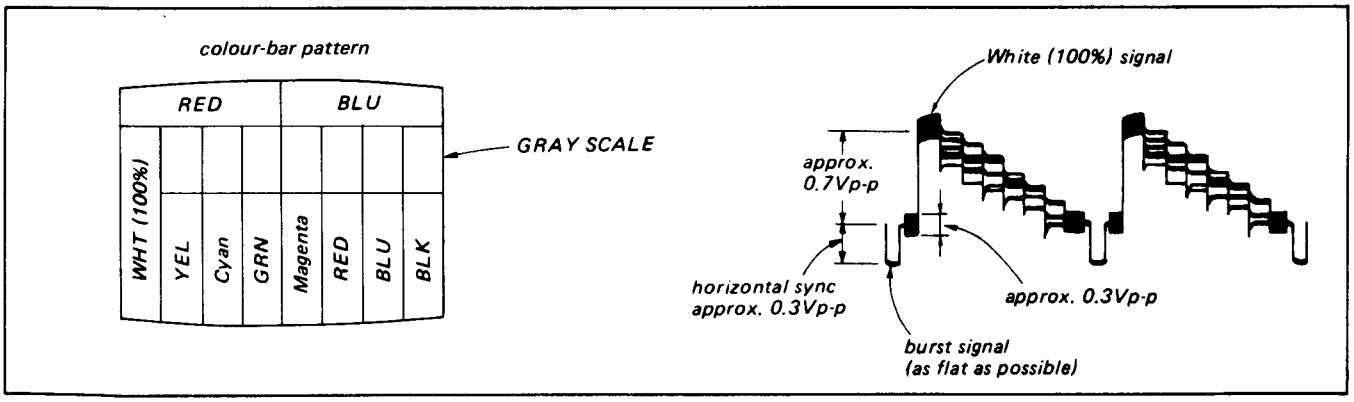

Fig. 5-38. SECAM video (colour-bar) signal

[Alignment Tape]
KR5-1J

	Video signal	Audio signal	Playing time	Use for
1.	Colour-bars	3 kHz – 5 dB	5 min	General performance, tape speed checks, switching position adjustment.
2.	Monoscope	333 Hz – 25 dB	5 min	Video head dihedral, audio level adjustment.
3.	RF sweep	5 kHz – 25 dB	5 min	Video, audio frequency characteristics, audio azimuth adjustment. marker: 1, 2, 3.58, 4.5, 5.2 MHz
4.	Tracking 1 MHz (CH-B) *1 (Channel B is inserted in every 3 frames.)	1 kHz – 5 dB *2 (Signal is dropped out in the positions where channel B is inserted.)	5 min	Tracking, Audio height adjustments CTL Position check. (Check if *1 and *2 are the same position.)

MC-Service

[Colour-Bar Signal]

The 100% colour-bar signal recorded on the Alignment tape is shown in Fig. 5-39.

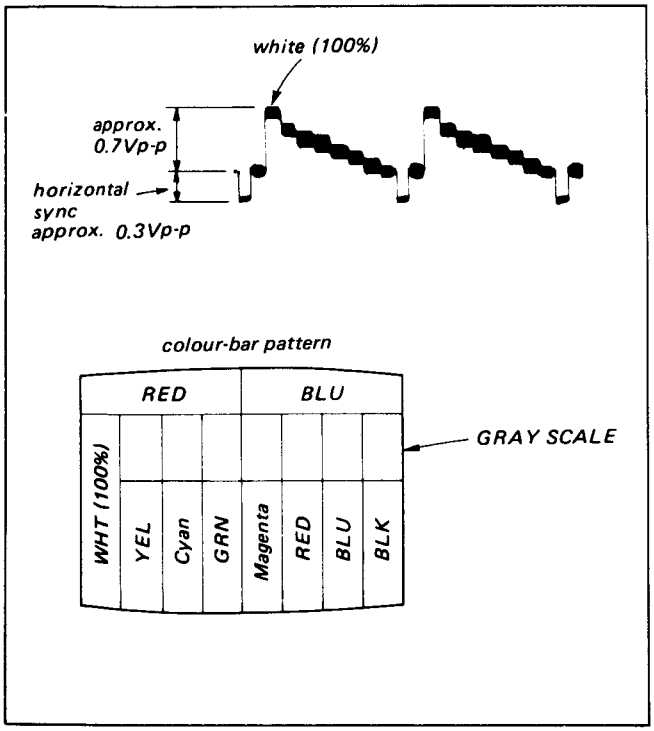

Fig. 5-39. Colour-bar signal recorded on the alignment tape

1) Bell Filter Adjustment (YC-40 Board)

Mode: E-E
Signal: SECAM colour-bar
Oscilloscope: Pin ⑦ of IC005

[Adjustment method]

Adjust LV003 until the waveform is flat.
(See Fig. 5-40.)

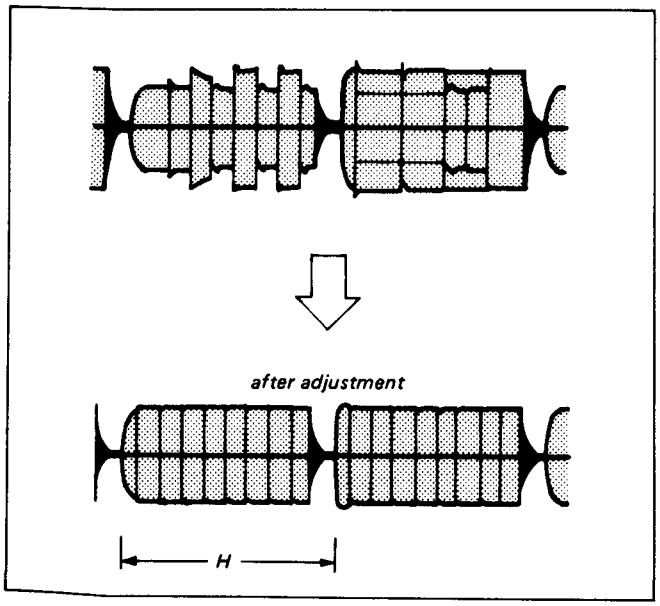

Fig. 5-40. Bell filter adjustment

2) SECAM ACK Adjustment (YC-40 Board)

Mode: E-E
Signal: SECAM colour-bar
Oscilloscope: Pin ⑨ of IC002

[Adjustment method]

i) Rotate LV001 to make the waveform amplitude to be maximum.
ii) Adjust RV001 to 5.8 ±0.2 Vp-p.

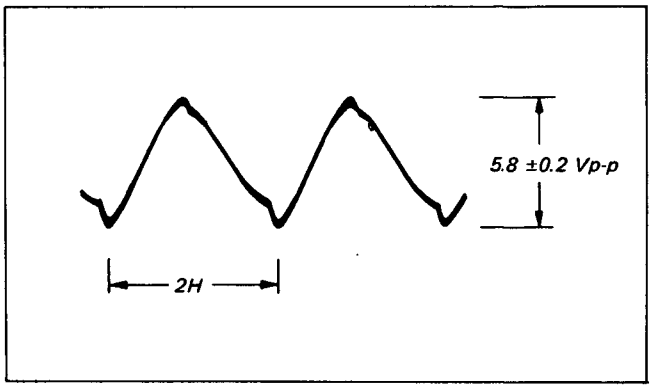

Fig. 5-41. SECAM ACK adjustment

3) Counter Bell Filter Adjustment (YC-40 Board)

Mode: Self-recording and playback
Signal: SECAM colour-bar
Adjust while observing the monitor TV screen.

[Adjustment method]

i) Record SECAM colour-bar signals.
ii) Playback the recorded signals.
iii) While observing the monitor TV screen, adjust LV002 until the border between the red and blue areas is at its cleanest (minimum beats).

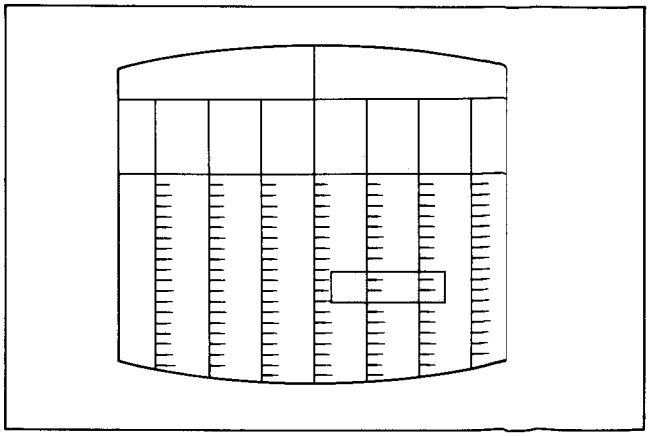

Fig. 5-42. Counter bell filter adjustment

5-6. AUDIO SYSTEM ADJUSTMENT

Use a Dynamicron tape for adjustments.

[Connection of Related Equipment]

Note:
Set the INPUT SELECT switch to LINE/PCM.

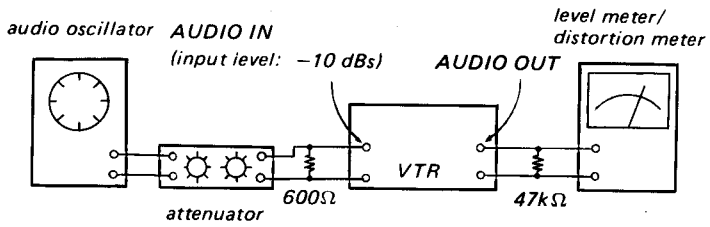

5-6-1. Normal Audio System Adjustment (TA-36/37 Board)

Note:
Set the BETA Hi-Fi switch to NORM.

[Adjustment method]

1. ACE head adjustment . . . . See "Mechanical Adjustment"
2. Playback frequency characteristic check
3. Playback output level adjustment
4. Bias oscillator check
5. Record bias adjustment
6. Overall S/N check
7. Overall distortion check
8. Audio insert adjustment

1. ACE Head Adjustment
Refer to "Mechanical Adjustment"

2. Playback Frequency Characteristic Check
Playback 333 Hz and 7 kHz from the alignment tape and check so that the level difference between 333 Hz and 7 kHz is within −4 ±5 dB.

3. Playback Output Level Adjustment
Playback 333 Hz from the alignment tape and adjust so that the output level is −10 dBs ±0.5 dB with RV901.

4. Bias Oscillator Check
(1) Set the input signal level to zero and set up the RECORD mode.
(2) Connect a frequency counter to Pin ① of CN902. The reading should be 65 kHz ±6.5 kHz. (See Fig. 5-43.)

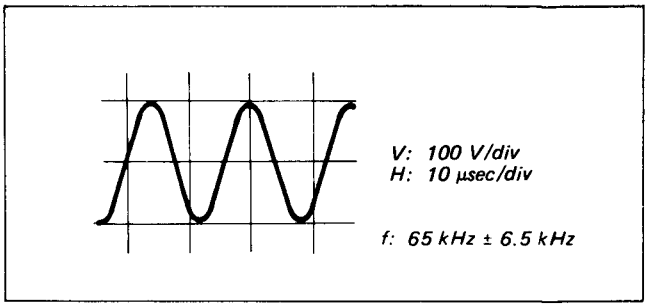

Fig. 5-43. Bias oscillator check

5. Record Bias Adjustment
Check that "Playback frequency characteristic adjustment" has been made.
(1) Connect TP903 and GND with a jumper wire so as to turn off the AGC operation.
Connect Pin ⑤ of CN901 and GND with a jumper wire so as to turn off the HI CUT operation.
(2) Supply a 333 Hz signal.
(3) Set up the E-E mode and adjust the oscillator output level so that the level meter reading is −30 dBs.
(4) Record signals.
(5) Supply a frequency of 7 kHz and perform Steps (3) and (4) above.
(6) Play back the recorded section of the tape and check that the output level at 7 kHz is −4 ±5 dB relative to the output level at 333 Hz. If the level is outside this range, repeat Steps (2) through (5) adjusting with RV902 until the standard is met.
(7) Remove the jumper wire after making the adjustment.

6. Overall S/N Check
(1) Supply a 333 Hz signal at −10 dBs.
(2) Record signals.
(3) Set the input signal level to zero and record signals.
(4) Play back the recorded section of the tape and check that the output level difference is greater than 38 dB.

7. Overall Distortion Check
(1) Supply a 333 Hz signal at −10 dBs.
(2) Record signals.
(3) Play back the recorded section of the tape and verify that the distortion is below 4%.

8. Audio Insert Adjustment
(1) Set the input signal level to zero and set up the RECORD mode.
(2) Read TP904 value (F Hz) at the frequency counter.
(3) Adjust TP904 value by LV901 so that it is F ±0.6 kHz at audio insert mode.

5-6-2. BETA Hi-Fi Audio System Adjustment (FL-8, AF-14 Boards)

Note:
Set the RECORD switch to VIDEO.
Set the MPX FILTER switch to OFF.
Set the BETA Hi-Fi switch to AUTO.
( ) is R-CH.

[Adjustment method]

1. REC VR adjustment
2. E-E input level check
3. Dynamic emphasis adjustment
4. AFM carrier frequency adjustment
5. AFM deviation adjustment
6. AFM record current adjustment
7. Level meter adjustment
8. RF input level adjustment
9. Tracking meter adjustment
10. Demodulator f_0 adjustment
11. Demodulator DC offset preset adjustment
12. Level and level balance adjustment
13. Overall frequency characteristic check
14. Overall distortion check
15. Overall S/N check

1. REC VR Adjustment (FL-8 Board)

(1) Input at 400 Hz and −10 dB signal to the audio line input to set up a RECORD state. [Adjust the REC level volume control to the center click.]
(2) Adjust the level of Pin ⑤ (Pin ②) of CN1 to be −22 ±0.5 dBs with RV2 (RV3) on FL-8 board.

2. E-E Input Level Check

(1) Input at 400 Hz and −10 dB signal to the audio line input to set up a RECORD state. [Adjust the REC level volume control to the center click.]
(2) Check the level of TP008 (TP010) to be −26.5 ±0.5 dB.

3. Dynamic Emphasis Adjustment

(1) Input a 400 Hz and −10 dB signal to the audio line input to set up a RECORD state. [Adjust the REC level volume control to the center click.]
(2) Connect TP009 and 011 to the VTVM puls side. Adjust RV005 so that $\frac{A+B}{2}$ = −20.0 ±0.1 dBs, A = −20.0 ±0.3 dBs and B = −20.0 ±0.3 dBs where TP009 level is A dBs and TP011 level is B dBs.

4. AFM Carrier Frequency Adjustment

(1) Connect a frequency counter to TP001 [Emitter of Q016] (TP002 [Emitter of Q017]) in a no-signal state (shorted between the audio line input and GND) to set up a RECORD state.
(2) Adjust to 1.44 ±1 kHz (2.1 ±1 kHz) using RV001 (RV011).
(3) Restore the shorting between the line input and GND after completing the adjustment.

5. AFM Deviation Adjustment

(1) Input and record a 400 Hz and −10 dB signal to the audio line input and play back the recorded part. (Adjust the REC level volume control to the center click.)
(2) Playback BETA Hi-Fi alignment tape (KR5-10C), and measure the line-out level.
(3) Adjust RV002 (RV010) so that the value of (1) and (2) becomes same.

6. AFM Record Current Adjustment

(1) Short between the audio line input and GND to set up a no-signal state.
(2) Connect an oscilloscope to Pin ⑤ of CN002.
(3) Adjust f_2 to 160 ±5 mVp-p using RV003 and check that f_1 is inside 45 ±5 mVp-p.
(4) Restore the shorting between the line input and GND after completing the adjustment.

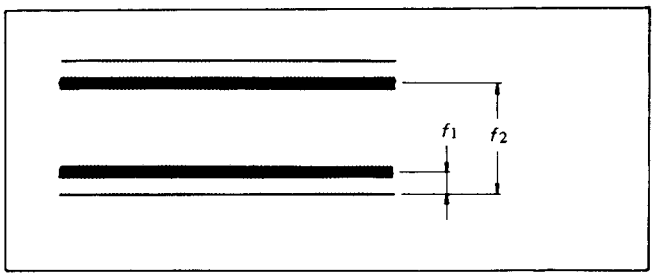

Fig. 5-44. AFM record current

7. Level Meter Adjustment

(1) Input a 400 Hz and −10 dB signal to the audio line input. [Adjust the REC level volume control to the center click.] [Level meter sw to ON.]
(2) Adjust the level meter by RV602 (RV603) so that lamps up to the seventh one come on.
(3) Operate the REC level volume control and check that the level meter lamps come on in conjunction with operation of the control.
(4) Check that the lamps go off when turning off the level meter switch.

8. RF Input Level Adjustment

Note:

Make this adjustment after checking that the AFM record current has been adjusted. Rotate and adjust the tracking control knob so that the Pin (1) of CN015 output waveform becomes maximum.

(1) Connect the 1500 Ω resistor between Pin (1) and (2) of CN015.

(2) Record a picture by placing the RECORD mode switch in the VIDEO position, then playback the picture.

(3) Connect an oscilloscope to Pin (1) of CN015 and adjust to 1.9 Vp-p $^{+0.2}_{-0.5}$ Vp-p with RV009.

(4) After the adjustment, disconnect the 1500 Ω resistor between Pin (1) and (2) of CN015.

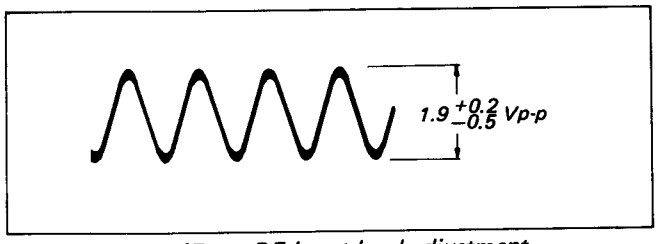

Fig. 5-45. RF input level adjustment

9. Tracking Meter Adjustment

(1) Record a picture by placing the RECORD mode switch in the SOUND position, then playback the picture (placing the level meter switch in the TRACKING position).

(2) While placing the tracking VR in the center click position, adjust RV601 so that level meter lamps up to the seventh one come on (only L-CH lamps must come on).

(3) Record colour-bar, monoscope and other pictures by placing the RECORD mode switch in the VIDEO position, then playback them and check that level meter lamps do not come on.

10. Demodulator f0 Adjustment

- L-CH
  (1) Input a 1.34 MHz 300 mVp-p signal into TP005 and 006, then record a picture.
  (2) Playback the picture. Connect a digital voltmeter to TP007 and adjust it by RV012 to 2.0 ±0.1 V dc.
- R-CH
  (1) Short between the audio line input and GND, and record.
  (2) Playback the recorded part.
  Connect an digital voltmeter to TP016 and adjust to 2.0 ±0.1 V dc with RV008.

11. Demodulator DC Offset Preset Adjustment

(1) Input a 10 kHz and −10 dB signal to the audio line input.

(2) Record the signal and play back the recorded part. Check the waveform from the audio line output, and adjust to make the DC difference in grade minimum with RV604 (L-CH) and RV605 (R-CH).

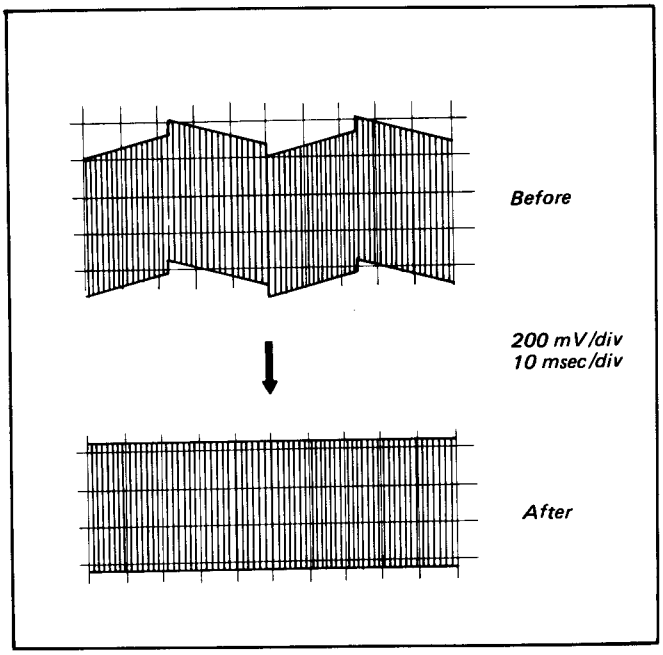

Fig. 5-46. Demodulator DC offset adjustment

(3) Carry out the level and level balance adjustment of item 12).

(4) Repeat (1) and (2) above.

MC-Service

12. Level and Level Balance Adjustment

(1) Play back the BETA Hi-Fi alignment tape (KR5-10C).

(2) Connect an oscilloscope to TP008 (TP010) and adjust to −20 ±0.1 dB with RV014 and RV013 (RV006 and RV007), and to eliminate the level difference. (See Fig. 5-47.)

(3) Restore the shorting between the aduio line input and GND.

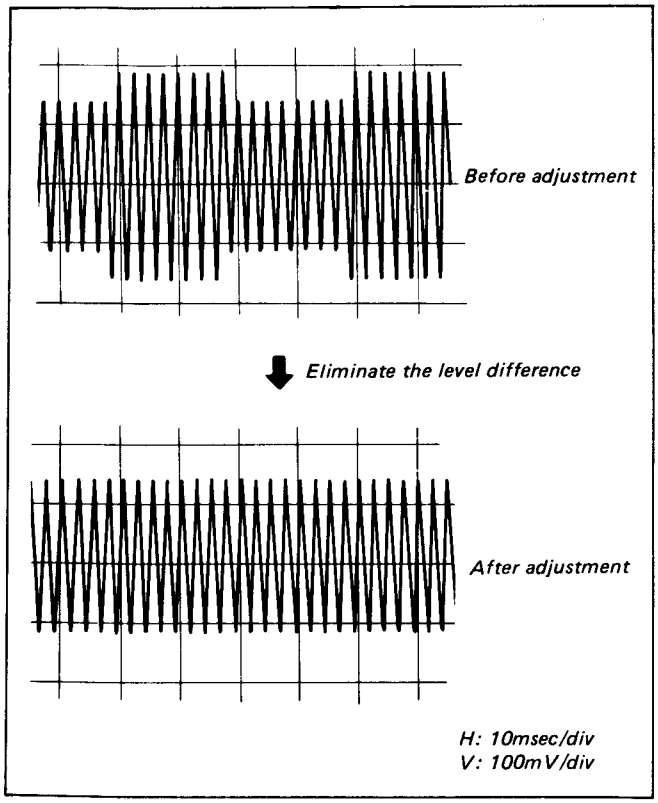

Fig. 5-47. Playback level balance adjustment

13. Overall Frequency Characteristic Check

(1) Feed a 400 Hz signal to the audio line input. Set up the E-E mode and adjust the attenuator so that the audio line output level becomes −10 dB.

(2) Record the signal.

(3) Change the ferequency to 20, 100, and 400 Hz, as well as to 10 kHz and 20 kHz, then repeat Steps (1) and (2).

(4) Play back the recorded part and check that the output levels are inside the standard. (See Fig. 5-48.)

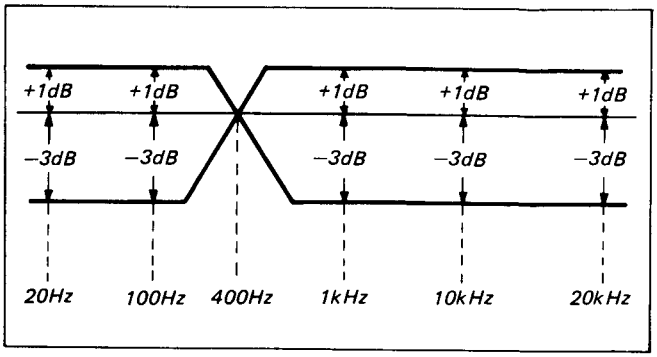

Fig. 5-48. Overall frequency characteristic check

14. Overall Distortion Check

(1) Supply a 400 Hz signal at 6.5 dB.

(2) Record the signal.

(3) Play back the recorded part of the tape and verify that the distortion is below 0.5%.

15. Overall S/N Check

(1) Supply a 400 Hz signal at −10 dBs.

(2) Record signals.

(3) Set the input signal level to zero and record signals.

(4) Playback the recorded section of the tape and check that the output level difference is greater than 65 dB. (Measure at IHF-A wating curve.)

5-7. TUNER SYSTEM ADJUSTMENT (TA-36/37 Board)

1. Tuner AGC Adjustment

(1) Receive broadcast TV signals in the highest contrast.
(2) Turn RV001 until snow (intensity-modulated display) noise appears on the TV screen.
(3) Turn RV001 backward until the snow (intensity-modulated display) noise disappears.
(4) Receive signals of all channels in turn, and ensure that there is no cross modulation beat, image deformation nor snow noise effect.

2. Stereo Separation Adjustment (TA-36 Board Only)

(1) L-CH and R-CH receive 400 Hz and 1 kHz stereo signals respectively from the signal generator.
(2) Connect an oscilloscope to Pin ① of CN002 and adjust RV002 so that the shaking by 1 kHz of the 400 Hz waveform becomes smallest.

RP-31 board
(Component side)

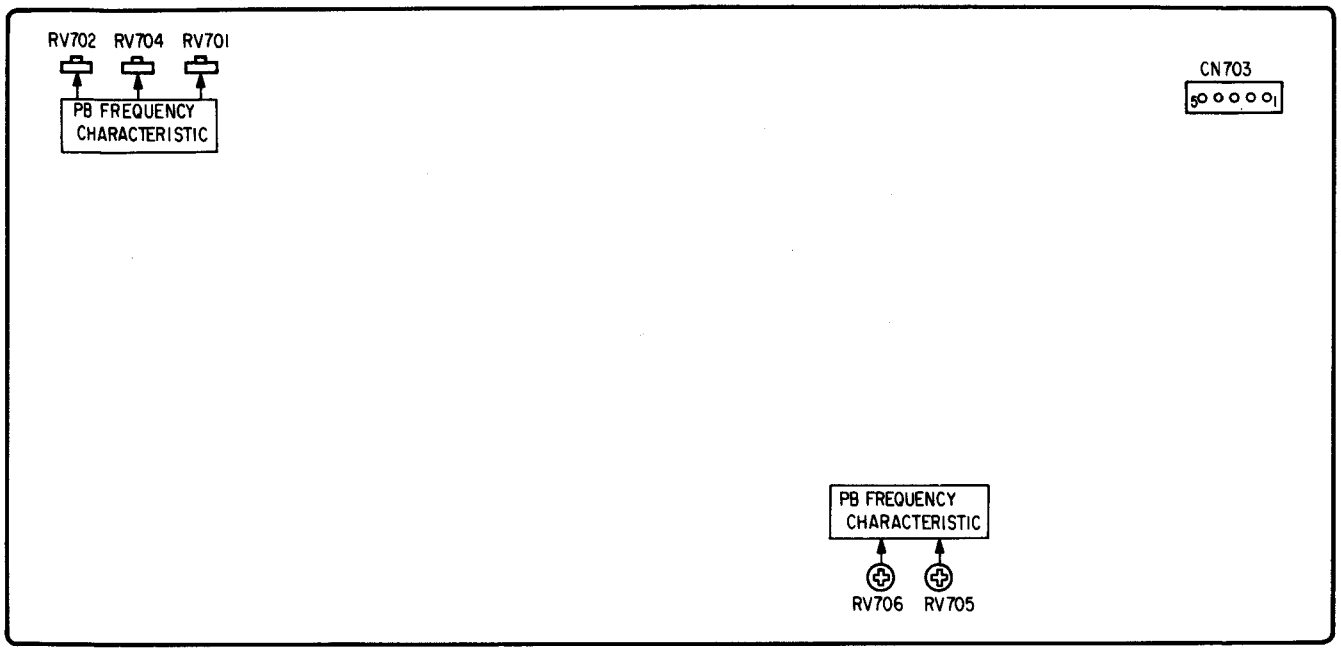

YC-40 board
(Component side)

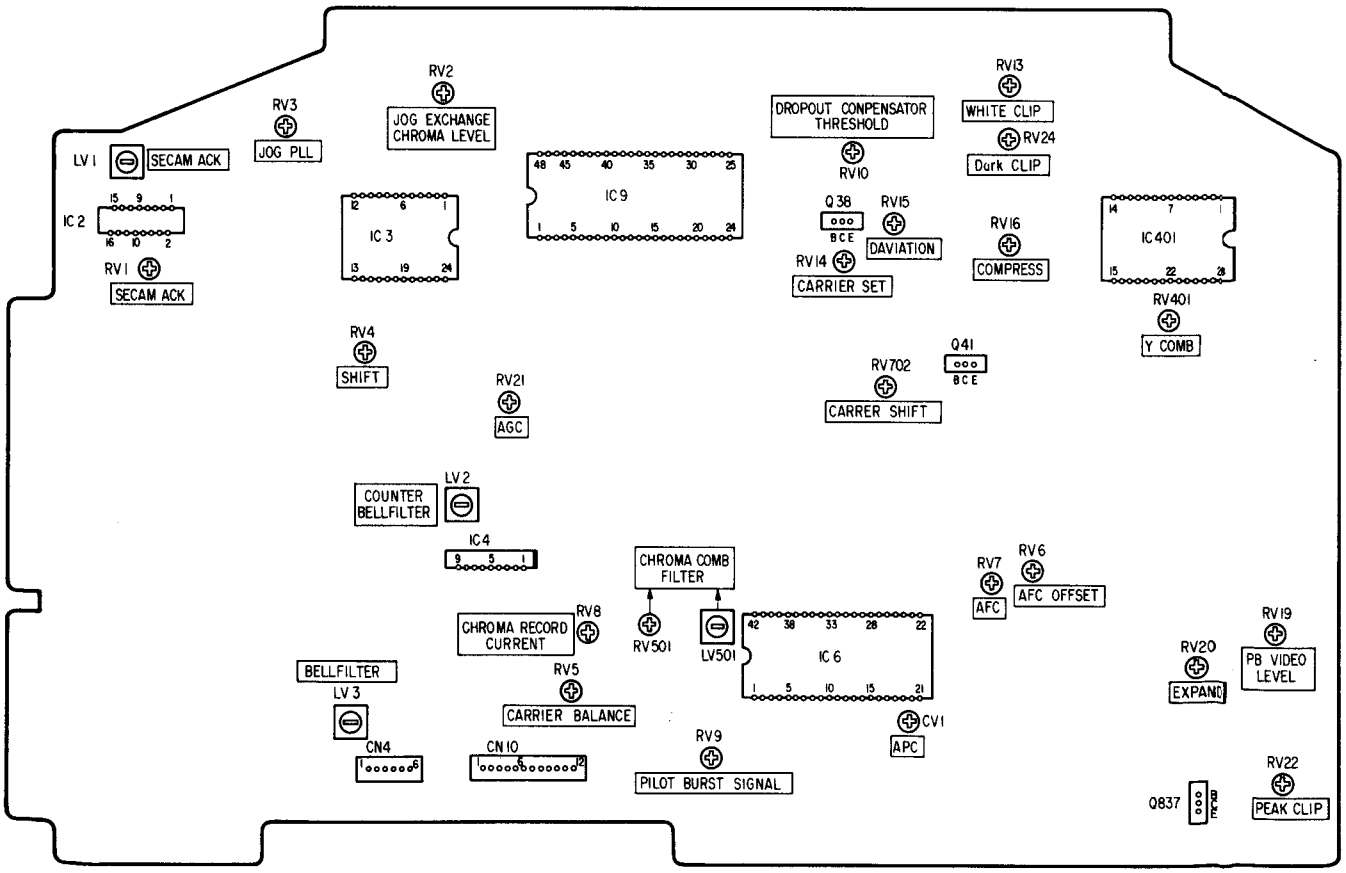

SS-50 board
(Component side)

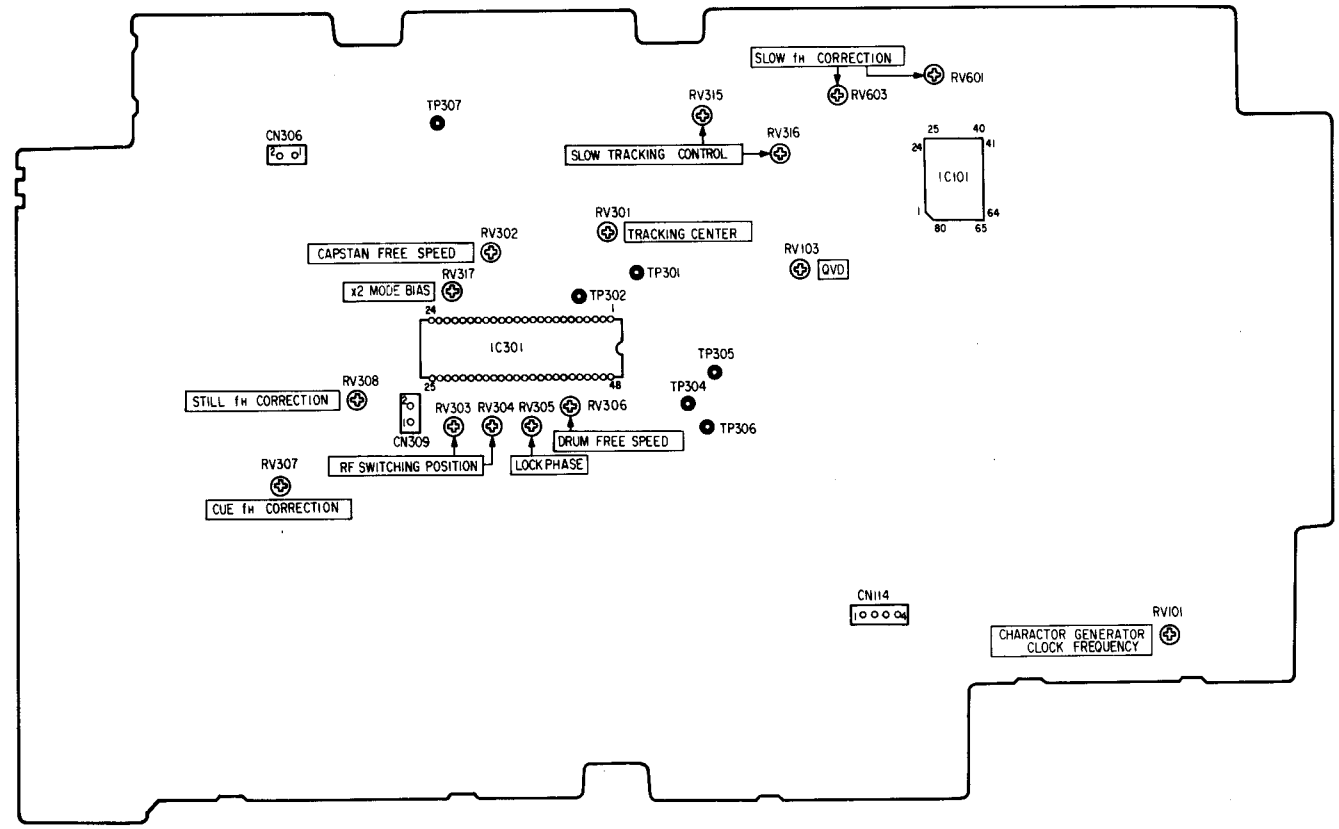

AF-14 board
(Component side)

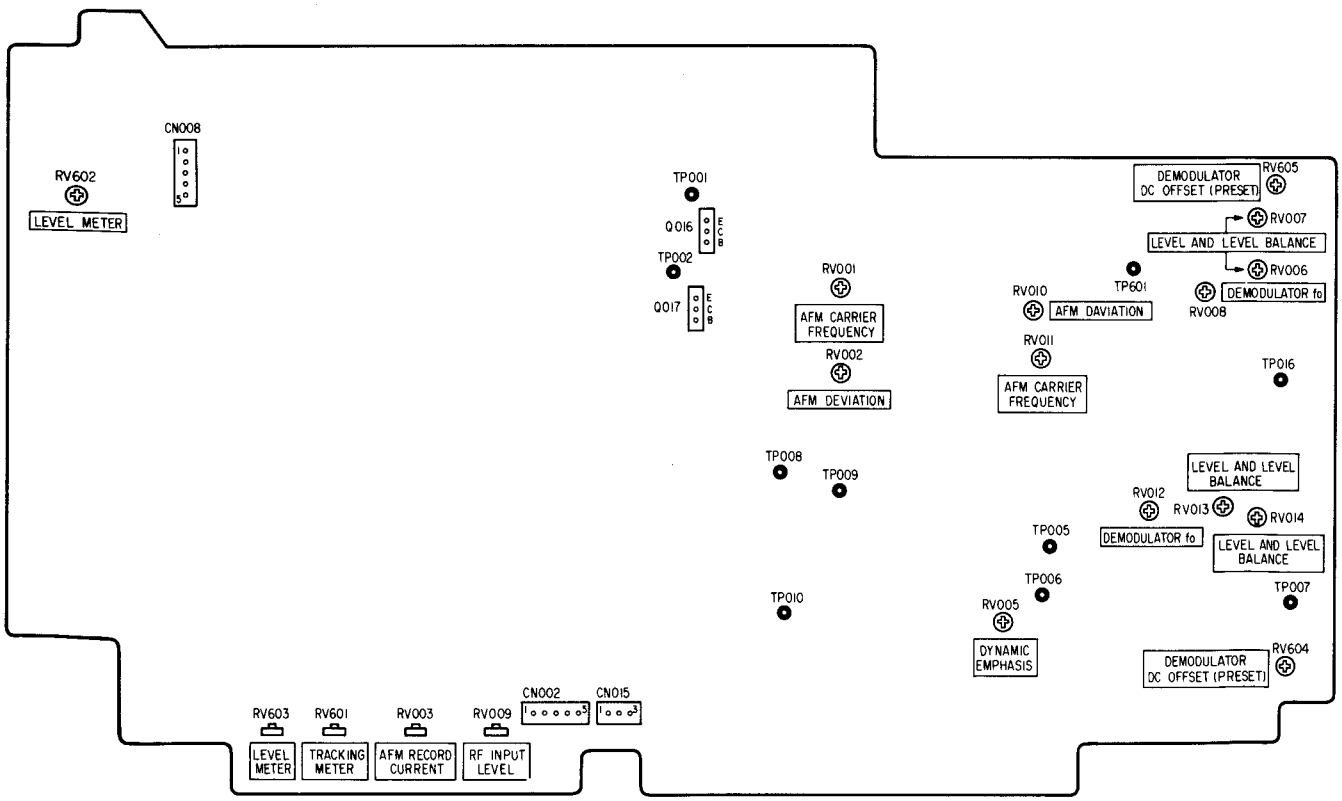

FL-8 board
(Component side)

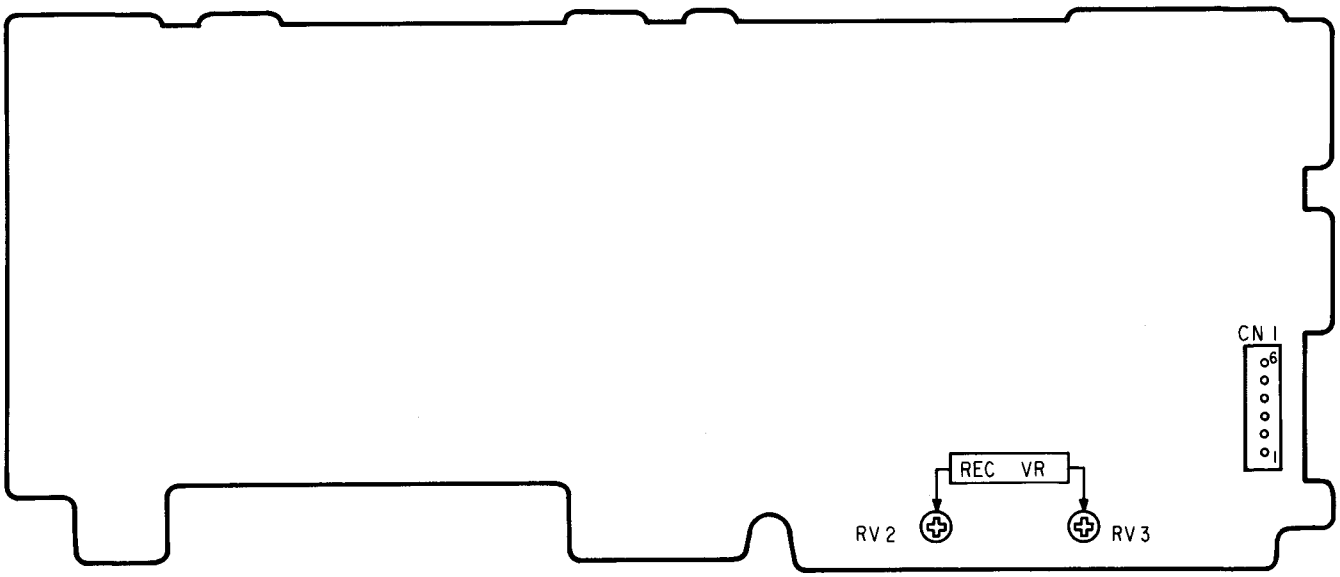

DH-4 board
(Component side)

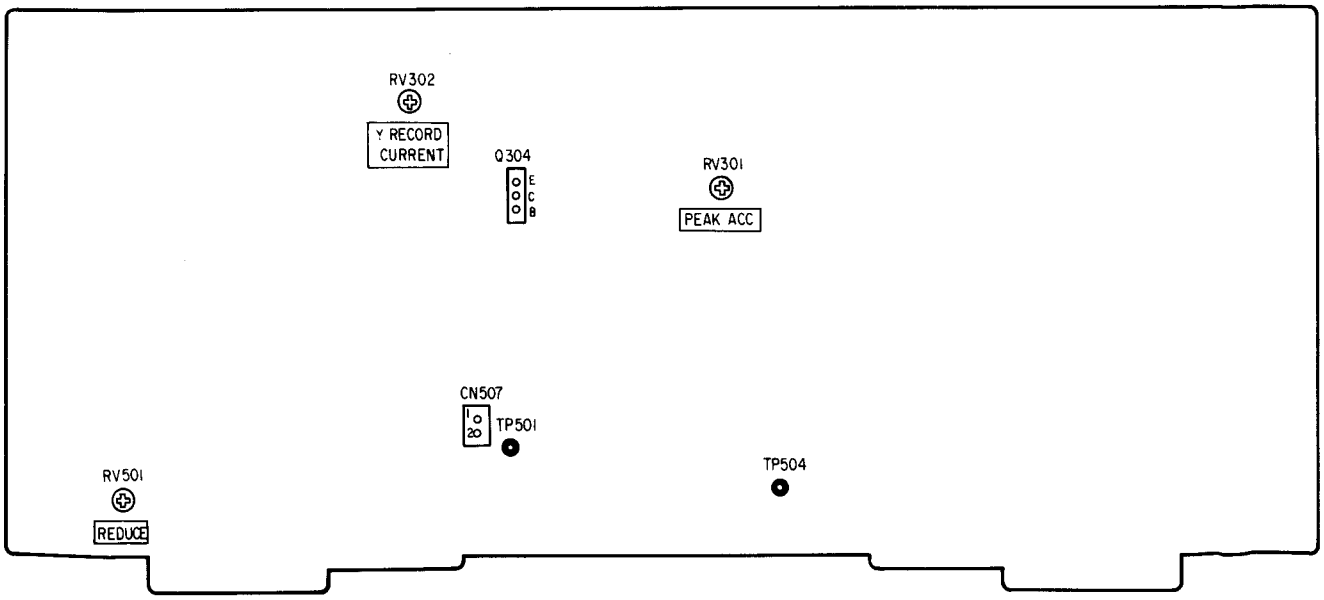

TA-36 board (ES model)
(Component side)

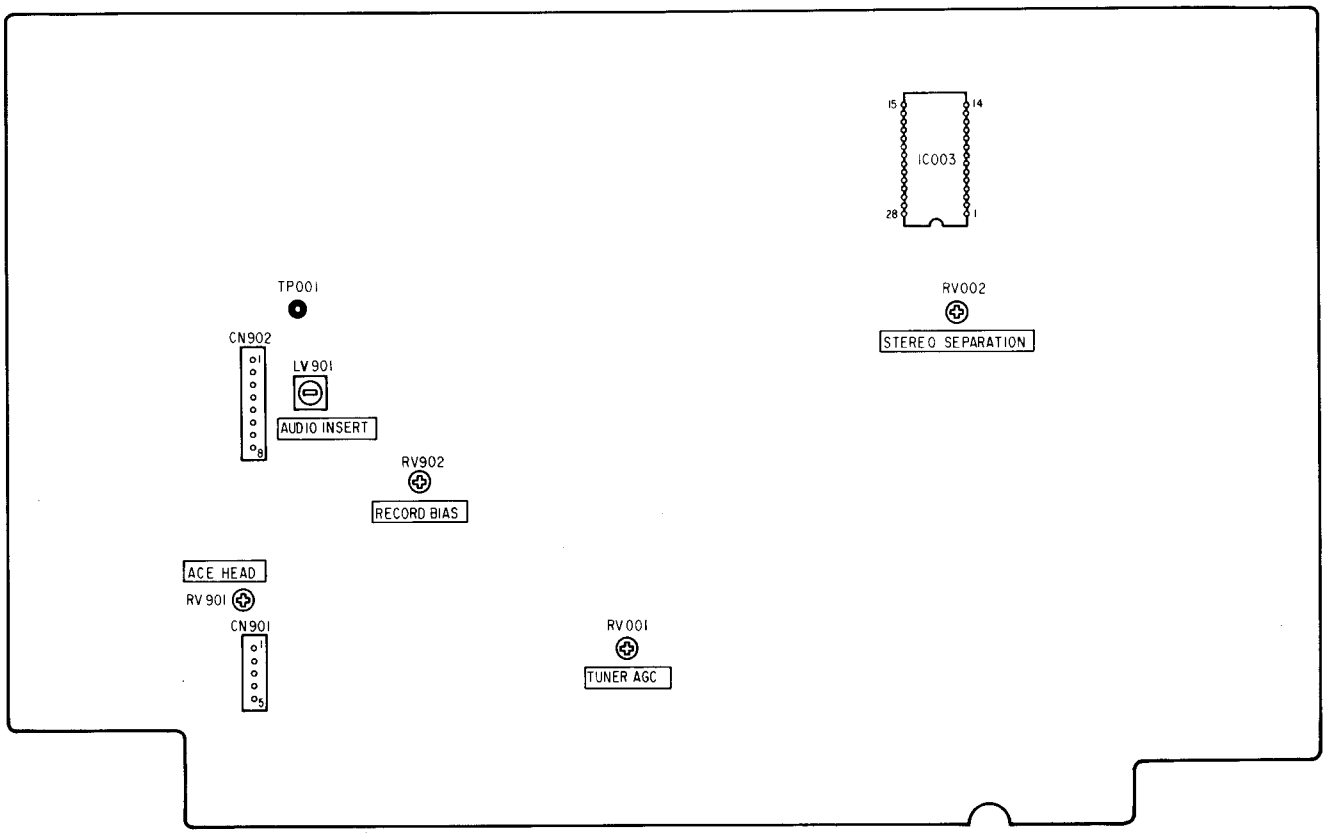

TA-37 board (E model)
(Component side)

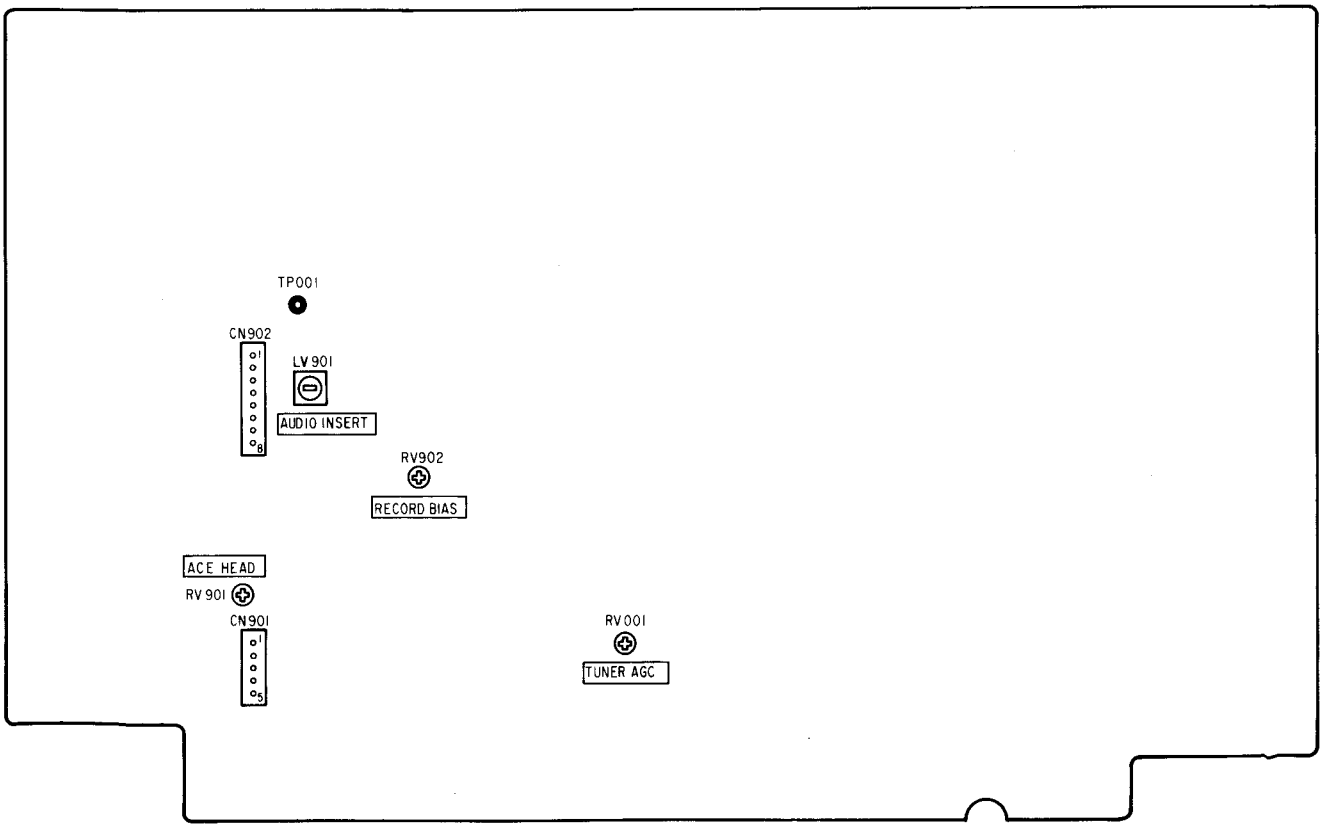

English
8iK 0567-1
Printed in Japan
© 1985

9-972-428-81

Sony Corporation

SL-HF950ES/E
RMT-223

SONY
SERVICE MANUAL

AEP Model
E Model

February, 1986

SUPPLEMENT-2

Subject:
This supplement updates the service manual to include the revised schematic diagrams, printed wiring boards and electrical parts list.
File this supplement with the service manual.

Correction:
There are some incorrect portions on the service manual.
Please correct the disassembly (Section 2-2, 2-3 and 2-6) and adjustment.

[Contents to be modified]

- The pattern has been changed.
- The end of part No. has been changed to 12/13.
  [-12: YC-40 board, SS-50 board, FL-8/9 board
  -13: AF-14 board, PJ-3 board, TA-36/37 board]

MC-Service

TABLE OF CONTENTS

Section	*Title*	*Page*
1.	PRINTED WIRING BOARDS AND SCHEMATIC DIAGRAMS	
1-1.	Frame Schematic Diagram	3
1-2.	AEP (ES) Model; YC-40, RP-31, TA-36, DH-4 Boards	8
1-3.	E Model; YC-40, RP-31, TA-37, DH-4 Boards	18
1-4.	SS-50, DR-33, RD-17, LM-17, R STATOR, CAPSTAN MOTOR Boards	30
1-5.	SS-50, QV-1, OC-1, US-1, LS-11 Boards	40
1-6.	AF-14, PJ-3, FL-8, DH-4, PW-15, DR-33, MC-10, HP-18 Boards	48
1-7.	FL-8, FL-9, FR-20 Boards	60
1-8.	TA-36 Board	68
1-9.	TA-37 Board	73
1-10.	M, CN, C, D, F Boards	78
2.	ELECTRICAL PARTS LIST	83
3.	CORRECTION	
	DISASSEMBLY	
2-2.	Removal of the TA-36/37 Board	123
2-3.	Removal of the SS-50 Board	123
2-6.	Removal of the FL-8, FL-9 Board	124
	ADJUSTMENT	
3)	RF Switching Position Adjustment (SS-50 Board)	125
16)	Chroma Record Current Adjustment (YC-40 Board)	125

1. PRINTED WIRING BOARDS AND SCHEMATIC DIAGRAM

1-1. FRAME SCHEMATIC DIAGRAM

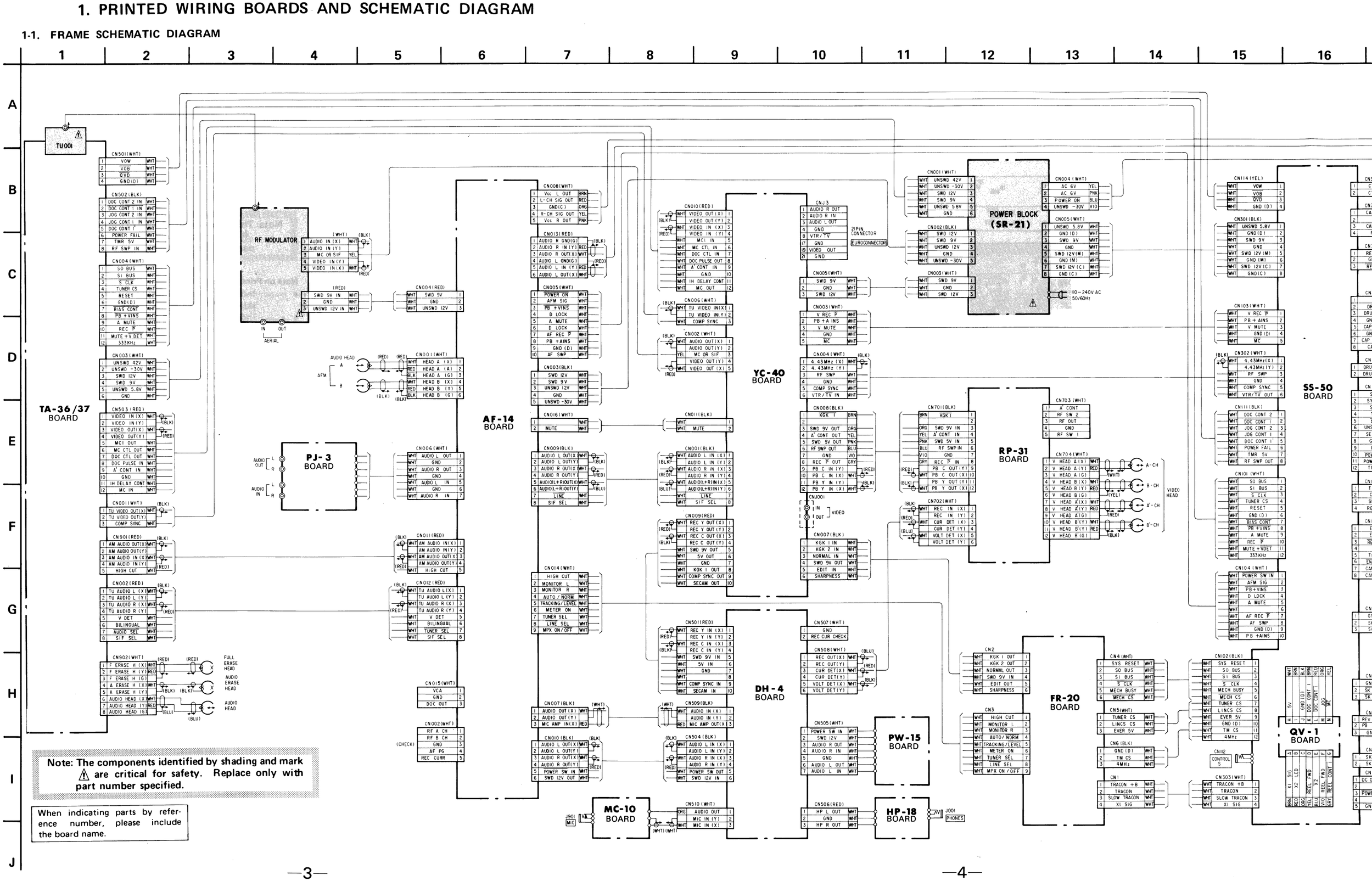

9 10 11 12 13 14 15 16 17 18 19 20 21 22 23 24

A B C D E F G H I J

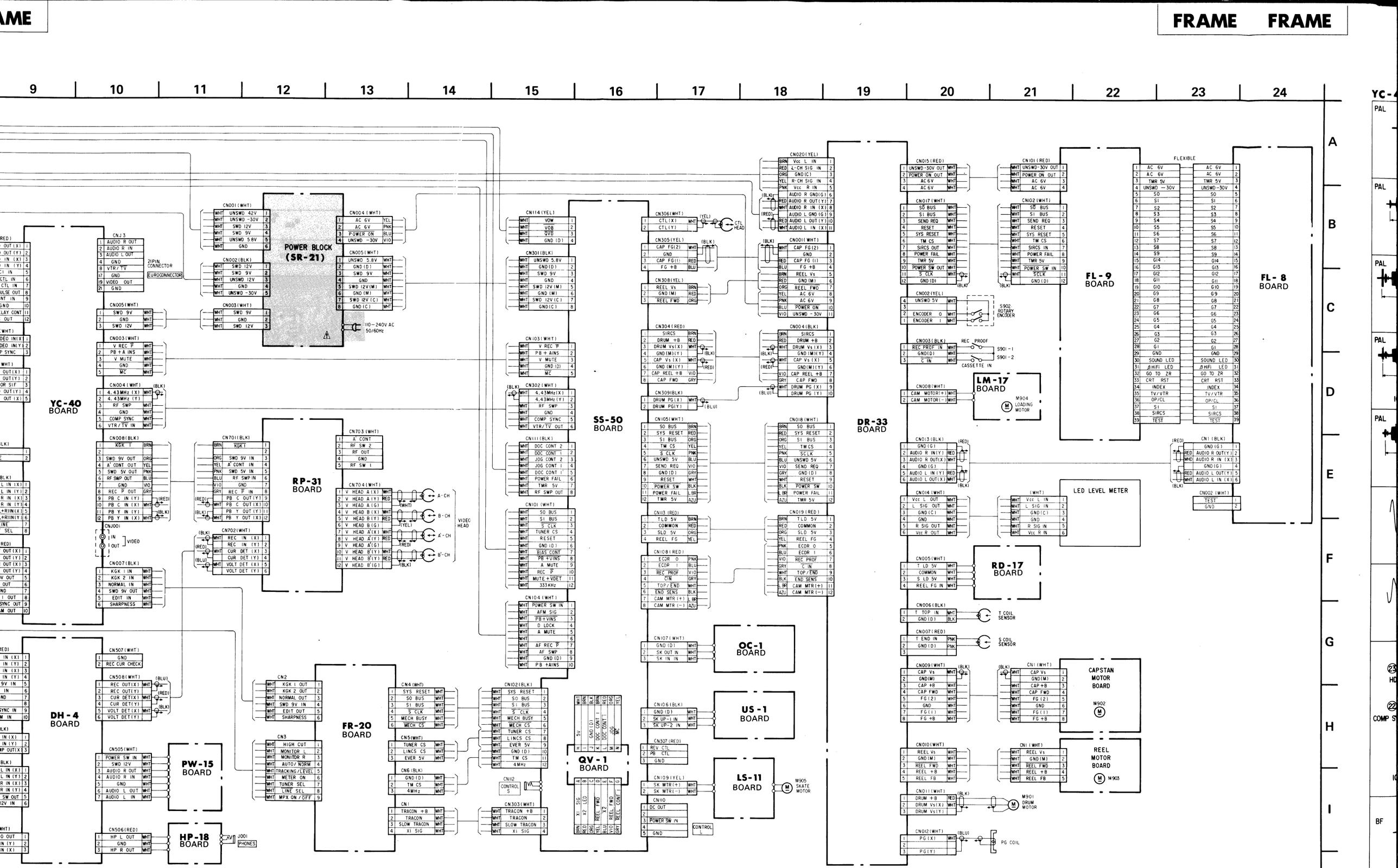

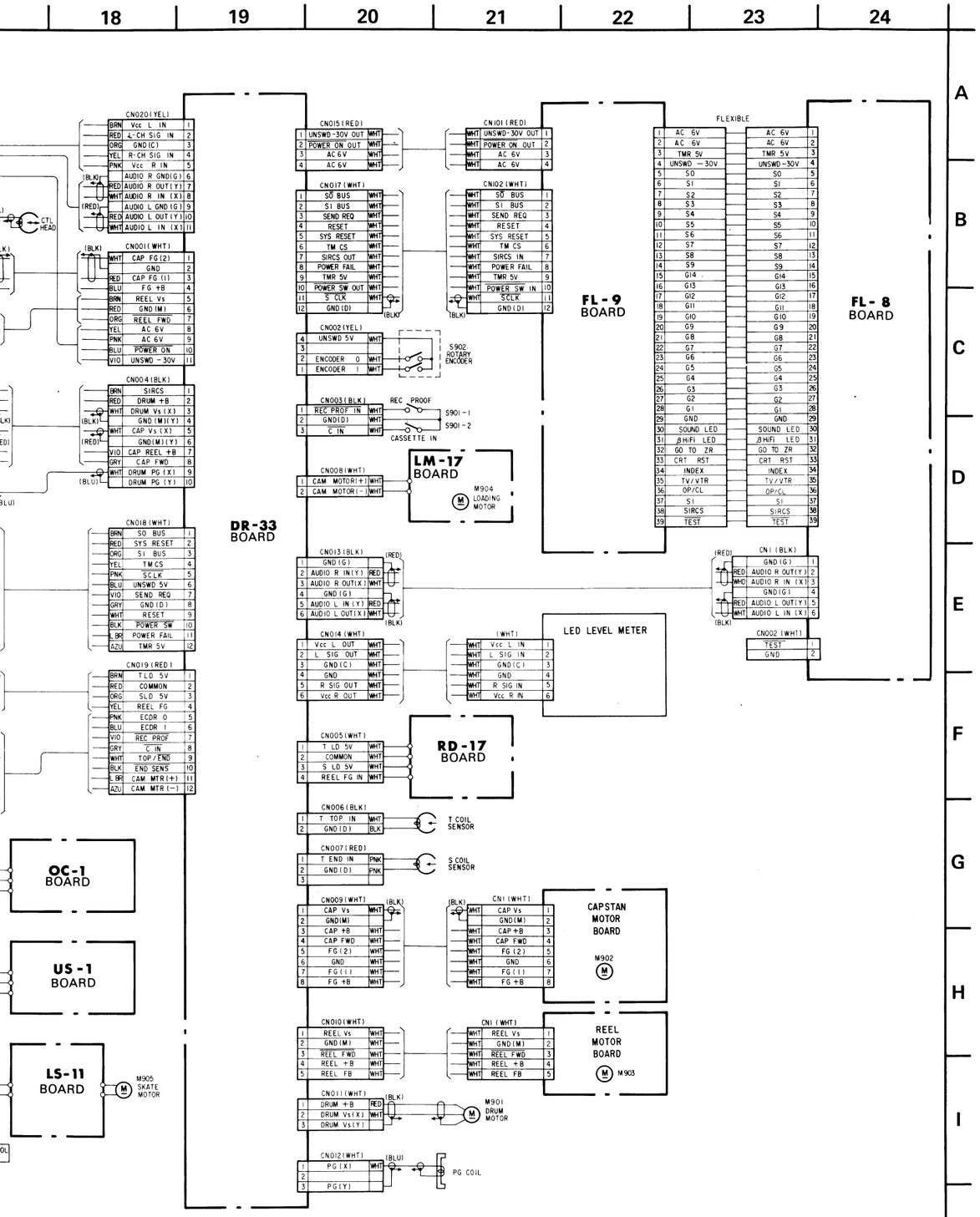

YC-40 BOARD (PAL / SECAM)

PAL		(SECAM)	
0.24Vp-p IC002 ⑦ REC / PB	6Vp-p IC006 ㉚ REC / PB	0.5Vp-p IC009 ㉜ PB	0.44Vp-p IC002 ⑦ REC/PB
0.75Vp-p IC004 ⑧ PB	0.32Vp-p (5.12MHz) IC006 ㉝ REC / PB	2Vp-p IC009 ㉟ PB	IC004 ⑧ 0.85Vp-p IC009 ㉜ 0.6Vp-p IC004 ⑧ REC IC009 ㉜ REC
① 0.8Vp-p ㊴ 1.4Vp-p IC006 ①, ㊴ REC	㊲ 0.34Vp-p ㊴ 1.4Vp-p IC006 ㊲, ㊴ PB	0.5Vp-p IC009 ㊳ PB	IC004 ⑧ 0.44Vp-p IC006 ㊲ 0.18Vp-p IC004 ⑧ PB IC006 ㊲ PB
①, ㊵ 0.8Vp-p ⑦ 0.18Vp-p IC006 ①, ⑦, ㉟ PB	③ 1.2Vp-p ㊵ 2Vp-p IC009 ③, ㉟ REC	0.5Vp-p IC401 ㉖ PB	① 0.85Vp-p ⑤ 0.32Vp-p ㊽ 0.85Vp-p IC006 ①, ⑤, ㉟ REC
⑤ 0.28Vp-p ㊽ 0.8Vp-p IC006 ⑤, ㉟ REC	⑥ 1Vp-p ㊲ 0.5Vp-p IC009 ⑥, ㊲ REC	5Vp-p 2 V CN004 ③	① 0.85Vp-p ⑦ 0.18Vp-p IC006 ①, ⑦ PB
2.6Vp-p (4.43MHz) IC006 ⑭ REC / PB	V : 0.2V / div H : 0.1μsec / div IC009 ⑱ PB	0.85Vp-p IC006 ㊴ REC	
1Vp-p (13.3MHz) IC006 ⑲ REC / PB	V : 0.2V / div H : 0.1μsec / div IC009 ㉑ PB	③ 1.2Vp-p ㊵ 2.2Vp-p IC009 ③, ㉟ REC	
㉓ HD ㉒ COMP SYNC ㉒ 4.5Vp-p ㉓ 5Vp-p IC006 ㉒, ㉓ REC / PB	V : 0.5V / div H : 0.1μsec / div IC009 ㉕ REC	0.32Vp-p IC009 ㉜ PB	
	1Vp-p IC009 ㉙ PB	2.4Vp-p IC009 ㉟ PB	
BF 3.2Vp-p IC006 ㉘ PB	0.18Vp-p IC009 ㉚ REC		

RP-31 BOARD

4Vp-p
IC 701 ④, ㉕ REC

1.2Vp-p
IC 701 ⑭ PB

0.24Vp-p
IC 701 ⑯, ⑲ PB

DH-4 BOARD

V : 0.5V / div
H : 0.1μsec/div
IC501 ① REC

V : 0.2V / div
H : 0.1μsec / div
IC508 ① REC

0.36Vp-p
CN501 ③ REC

1-2. ES MODEL; YC-40 (Y/CHROMA SIGNAL PROCESS), RP-31 (VIDEO SIGNAL REC/PB AMP), TA-36 (TUNER, AUDIO), DH-4 (A/V HEAD AMP) PRINTED WIRING BOARDS

– Ref. No. YC-40 BOARD: 1,000 series, RP-31 BOARD: 6,000 series, TA-36 BOARD: 4,000 series, DH-4 BOARD: 7,000 series –

<ES Model>

Q·IC	401 IC008 011 009,003 004 012 IC003 014 202 015 IC004 IC005 IC007 IC009 013 201,002 006 IC001 005 IC002 008 IC006 001 301 802 904 906 800 901 IC902 007 IC901 907 509 505 501,502 508 506 507 504 503 IC601 607,606 608,609 605 603 704 703 602 601 702 701	Q·IC
D	401 007 005 006 009 004 402 001 003 008 010 011 RV002 301 901 902 801 800 605 508 505 604,603 601,602 607 609,608 702,706,703 705,704,707 701	D
ADJ	RV001 RV902 LV901 RV901	ADJ
TP	701 905 903 904 901 001 902 601	TP

Q·IC	IC601 601 602 509 706 306 308 307 IC501 312 305 506 309 311 508 302 304 514 507 303 505 301 504 310 513 510 511 512 502 503	Q·IC
D	602 601 603 801 313,312 310 501	D
ADJ	RV301 RV303 RV302 RV501	ADJ
TP	504 502 503 505 501	TP

TA-36 BOARD

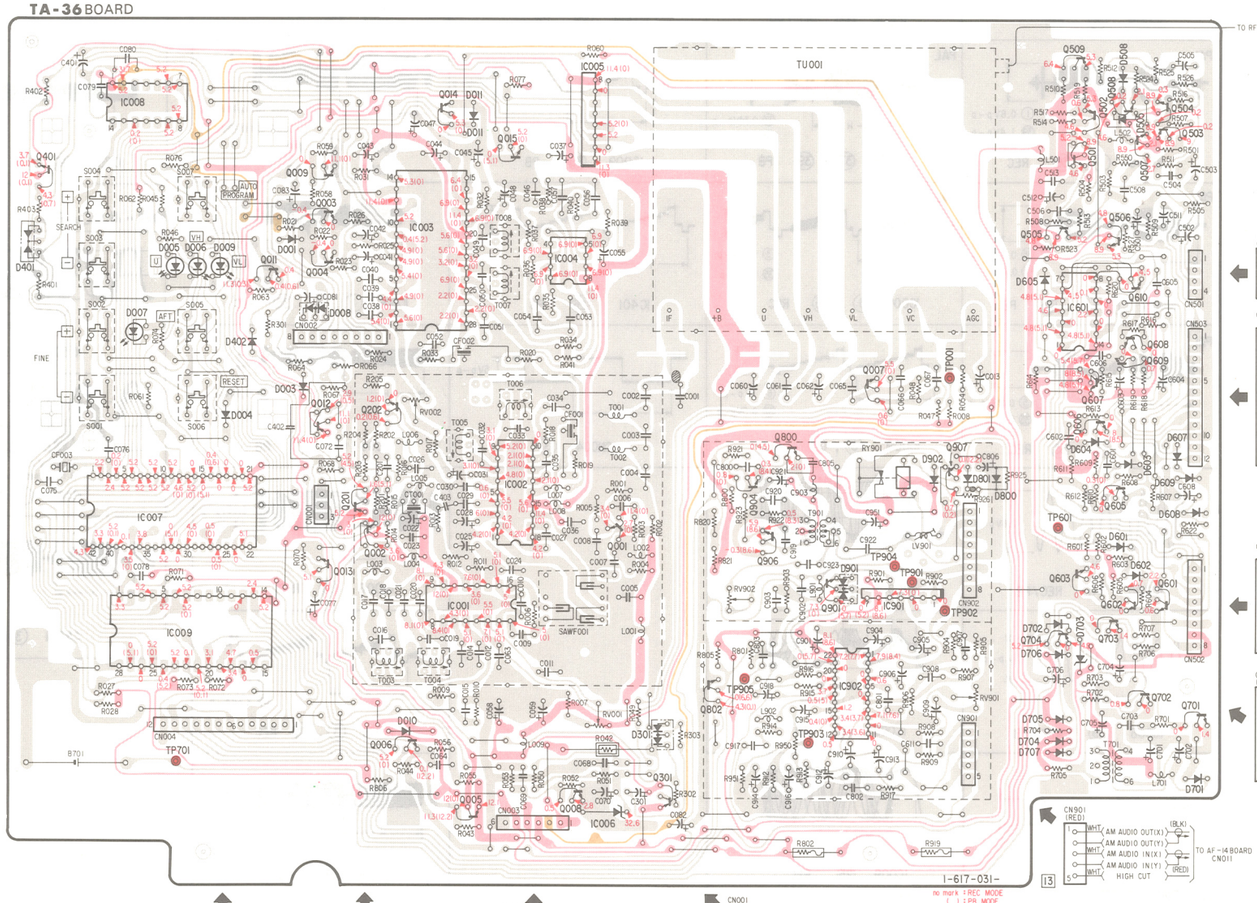

DH-4 BOARD

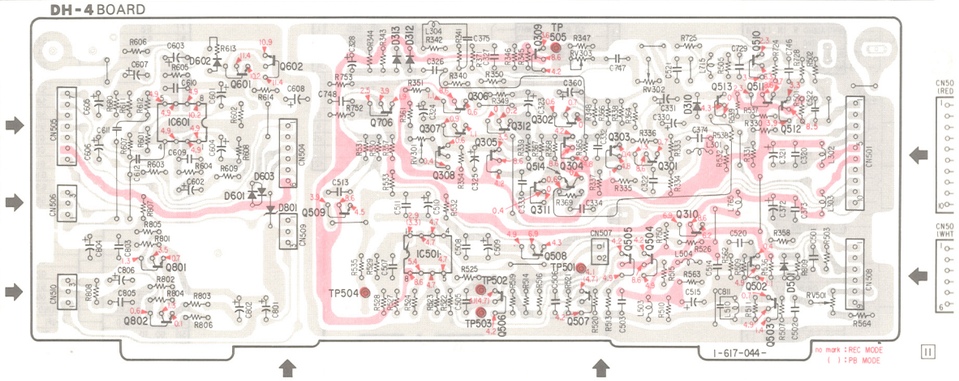

RP-31 BOARD

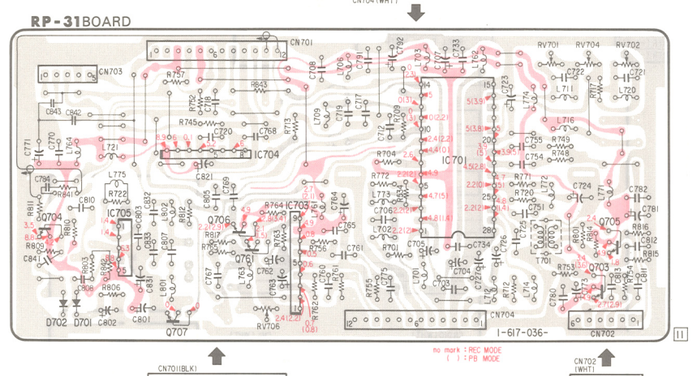

8 9 10 11 12 13 14 15 16 17 18 19 20 21 22 23 2

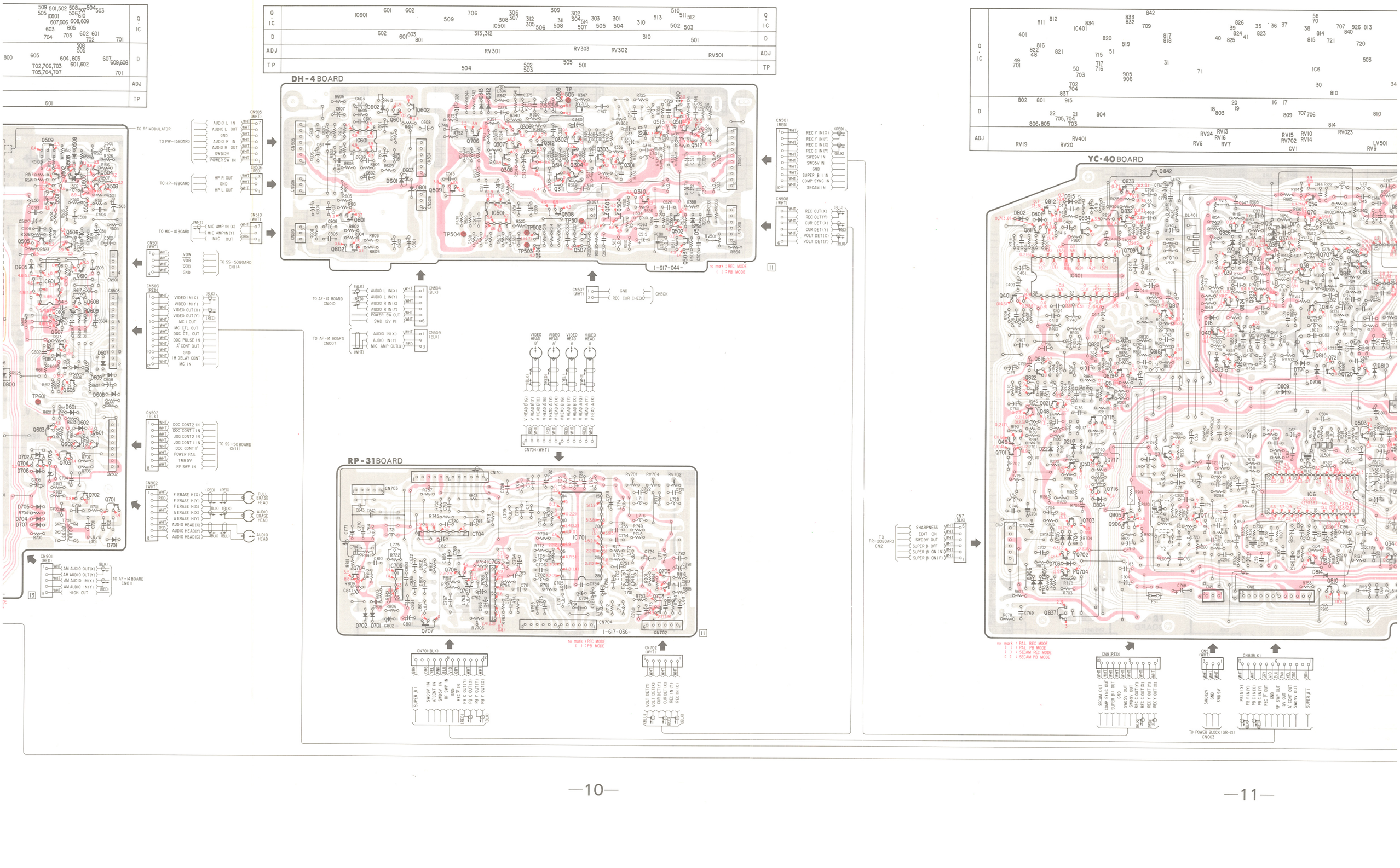

18 19 20 21 22 23 24 25 26 27 28 29 30 31 32 33

A B C D E F G H I J

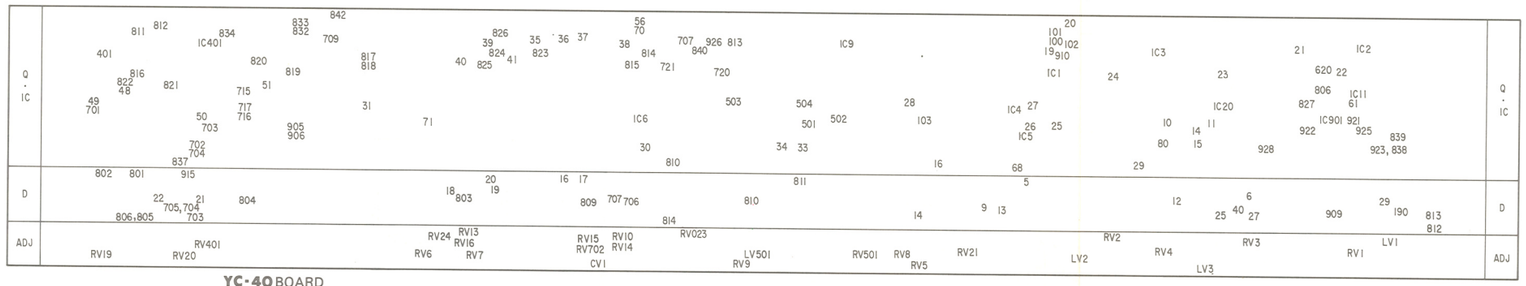

YC-40 BOARD

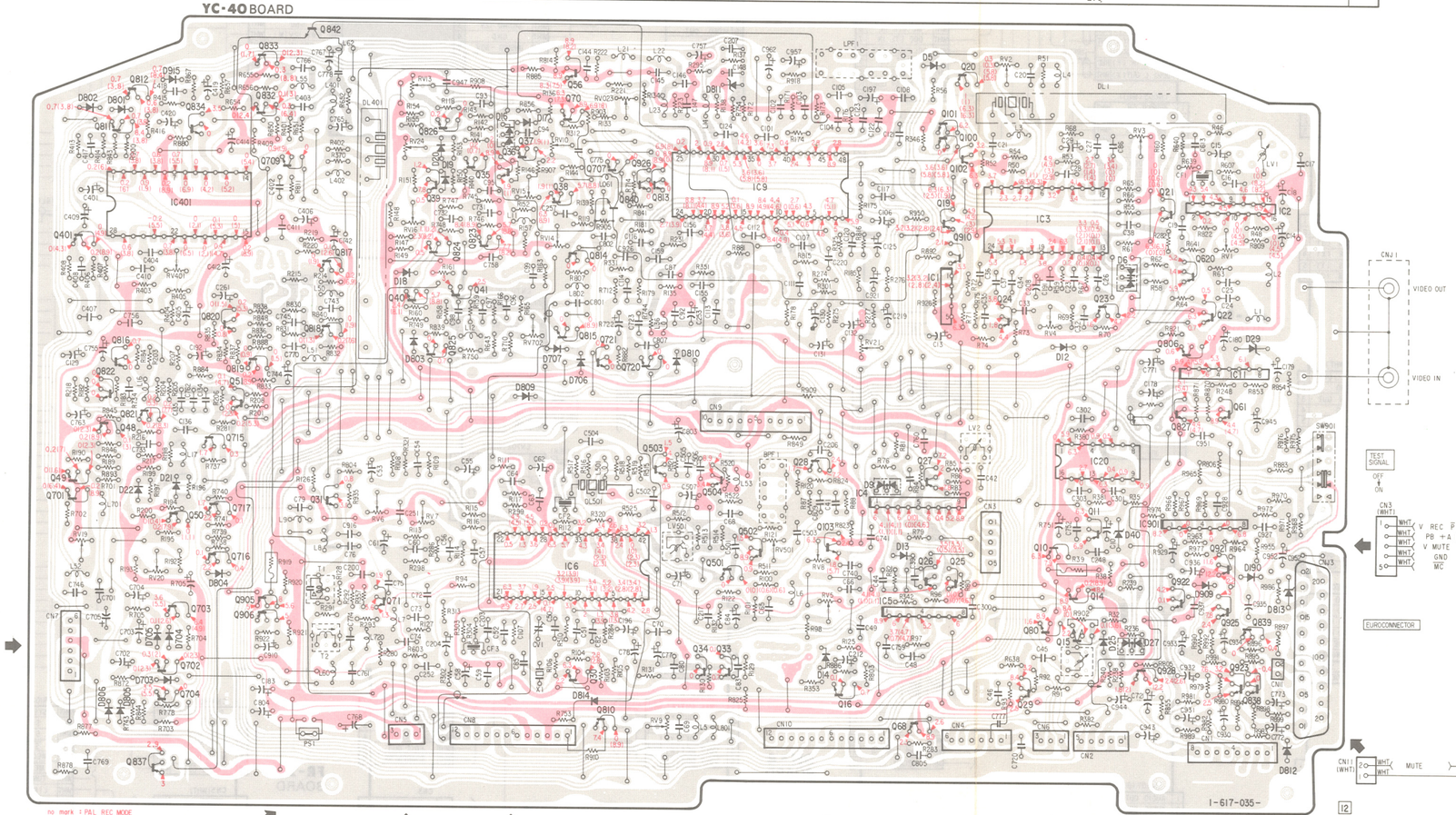

TO FR-20BOARD CN2

CN7 (BLK)

SHARPNESS
EDIT ON
SW05V OUT
SUPER β OFF
SUPER β ON (N)
SUPER β ON (P)

no mark : PAL REC MODE
( ) : PAL PB MODE
< > : SECAM REC MODE
[ ] : SECAM PB MODE

CN9(RED)
SECAM OUT
COMP SYNC OUT
SUPER β I OUT
GND
SW05V OUT
SW12V OUT
REC C OUT(N)
REC Y OUT(N)
REC C OUT(S)
REC Y OUT(S)

CN5 (WHT)
SW12V
GND
SW05V
TO POWER BLOCK (SR-21) CN003

CN8(BLK)
PB Y(N)
PB C(N)
REC I OUT
GND
RF SW OUT
5V OUT
A'CONT OUT
SW05V OUT
SUPER β I

CN10(RED)
MC OUT
1H DELAY CONT
GND
A'CONT IN
DOC PULSE OUT
GND
MC CTL IN
MC I IN
VIDEO IN(Y)
VIDEO IN(C)
VIDEO OUT(Y)
VIDEO OUT(C)

CN4(WHT)
VTP, TT IN
COMP SYNC
GND
RF SWP
4.43MHz(Y)
4.43MHz(C)
TO SS-50 BOARD CN302

CN6 (WHT)
COMP SYNC
TU VIDEO IN(Y)
TU VIDEO IN(C)

CN7 (WHT)
VIDEO OUT(Y)
VIDEO OUT(C)
GND
AUDIO OUT(Y)
AUDIO OUT(C)
TO RF MODULATOR

CN11(BLK)
S/F SEL
LINE
AUDIO L-IN(Y)
AUDIO L-IN(N)
AUDIO R-IN(Y)
AUDIO R-IN(N)
AUDIO L IN(Y)
AUDIO L IN(C)
AUDIO L OUT
TO AF-14 BOARD CN009

Note on Schematic Diagram:

- All resistors are in ohms, 1/6W unless otherwise noted. kΩ: 1000 Ω, MΩ: 1000 kΩ
- All capacitors are in μF unless otherwise noted. p: μμF 50WV or less are not indicated except for electrolytics.
- All variable and adjustable resistors have characteristic curve B, unless otherwise noted.
- : nonflammable resistor.
- : fusible resistor.
- The red lines show the main voltages.
- All voltages are dc measured with a VOM (10 MΩ).
- : B+ bus.

Note: The components identified by shading and mark ⚠ are critical for safety. Replace only with part number specified.

Note on Printed Wiring Board:

- : Indicates a leadwire mounted on the component side.
- : Indicates a leadwire mounted on the printed side.
- : soldering side.
- : B+ pattern
- : B− pattern
- Digital transistor (YC-40: Q15, 25, 31, 35, 100, 101, 102, 702, 704, 707, 709, 720, 721, 810, 811, 812, 813, 814, 815, 826, 834, 910, 922, 926. RP-31: Q707. DH-4: Q311, 312. TA-36: Q003, 004, 006, 013, 014, 015, 301, 508, 601, 604, 605, 610, 703, 800, 802, 901) transistors with resistors.
  Refer to the YC-40, RP-31, DH-4, TA-36 boards schematic diagram for digital transistor.

When indicating parts by reference number, please include the board name.

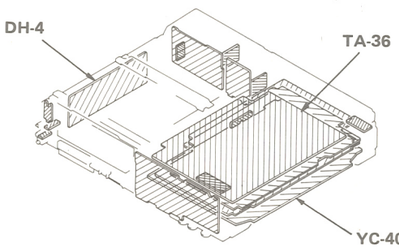

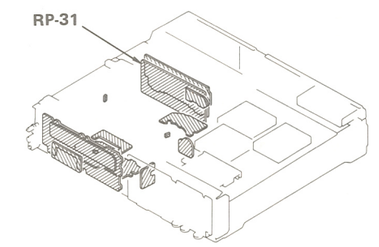

1 2 3 4 5 6 7 8 9 10 11 12 13 14 15 16
A B C D E F G H I J
<ES Model>
RP-31 BOARD
TA-36 BOARD (1/2)
DH-4 BOARD (1/2)
Signal path
: REC Y SIGN
: PB Y SIGNA
: REC CHROM
: PB CHROMA
: REC Y & CI
: PB Y & CHF
: PB AUDIO S

10 11 12 13 14 15 16 17 18 19 20 21 22 23 24 25

- **Signal path**
  - : REC Y SIGNAL
  - : PB Y SIGNAL
  - : REC CHROMA SIGNAL
  - : PB CHROMA SIGNAL
  - : REC Y & CHROMA SIGNAL
  - : PB Y & CHROMA SIGNAL
  - : PB AUDIO SIGNAL

YC-40 BOARD

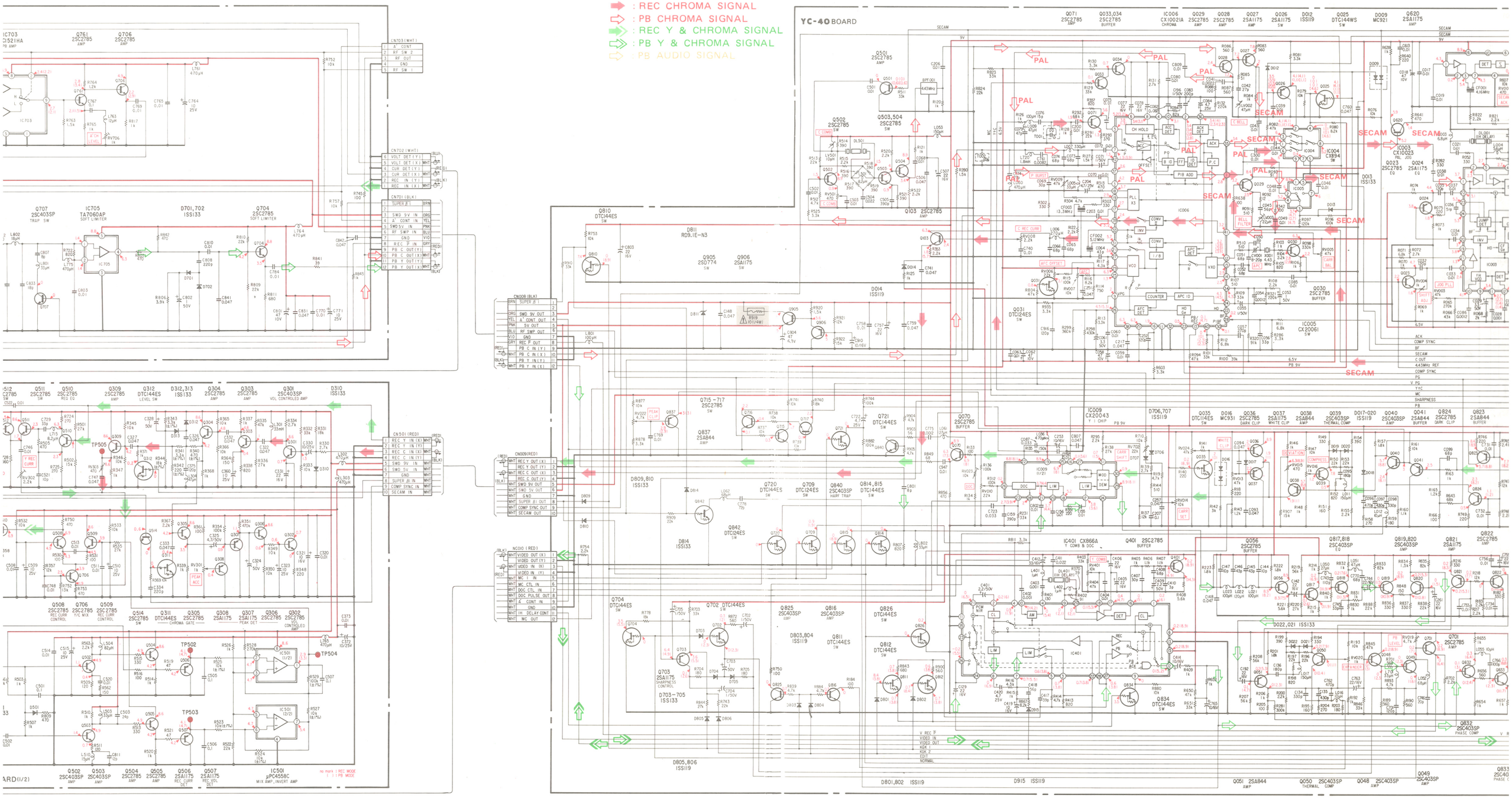

18 19 20 21 22 23 24 25 26 27 28 29 30 31 32 33

A B C D E F G H I

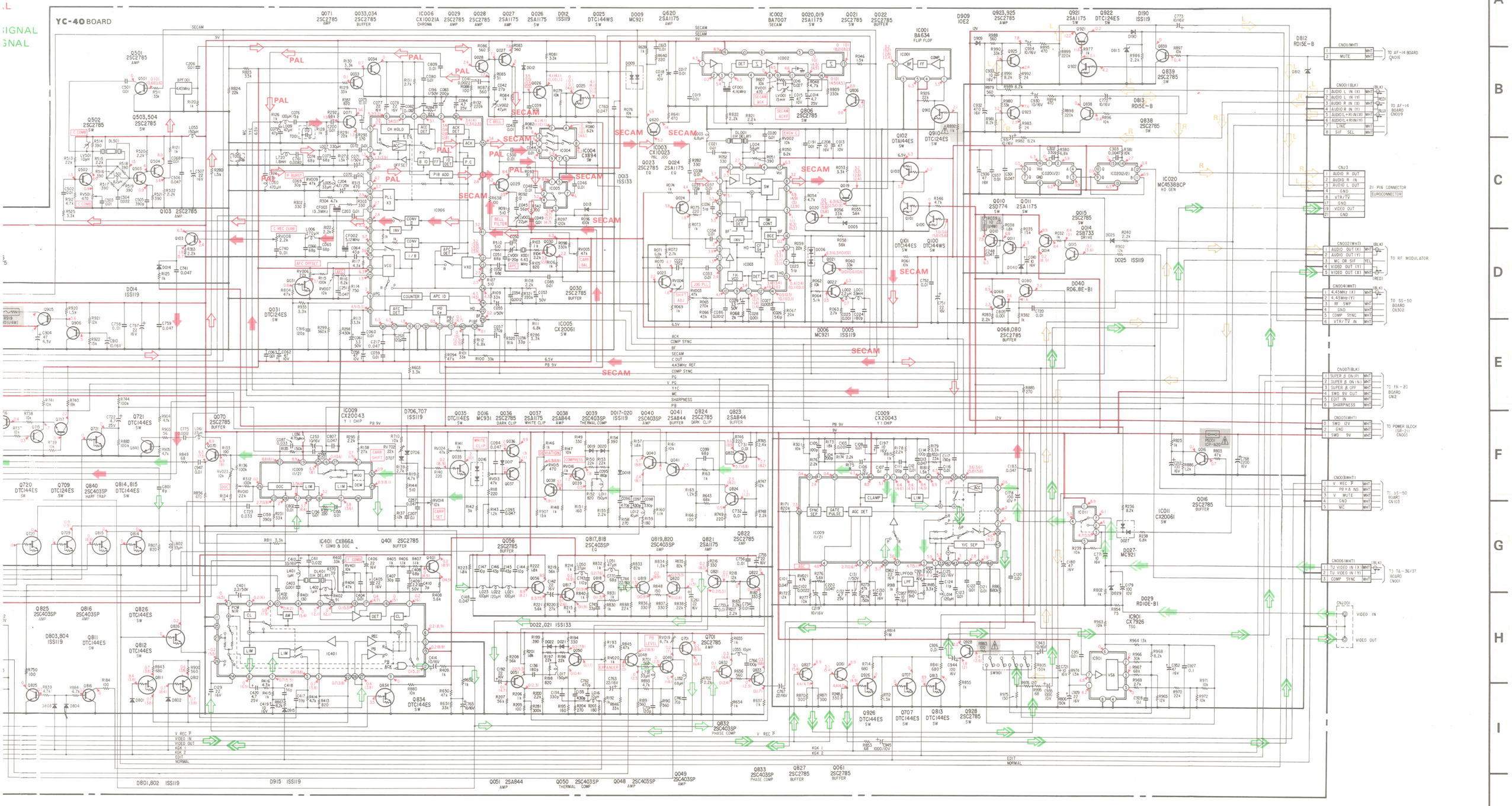

1-3. E MODEL; YC-40 (Y/CHROMA SIGNAL PROCESS), RP-31 (VIDEO SIGNAL REC/PB AMP), TA-37 (TUNER, AUDIO), DH-4 (A/V HEAD AMP) PRINTED WIRING BOARDS

– Ref. No. YC-40 BOARD: 1,000 series, RP-31 BOARD: 6,000 series, TA-37 BOARD: 5,000 series, DH-4 BOARD: 7,000 series –

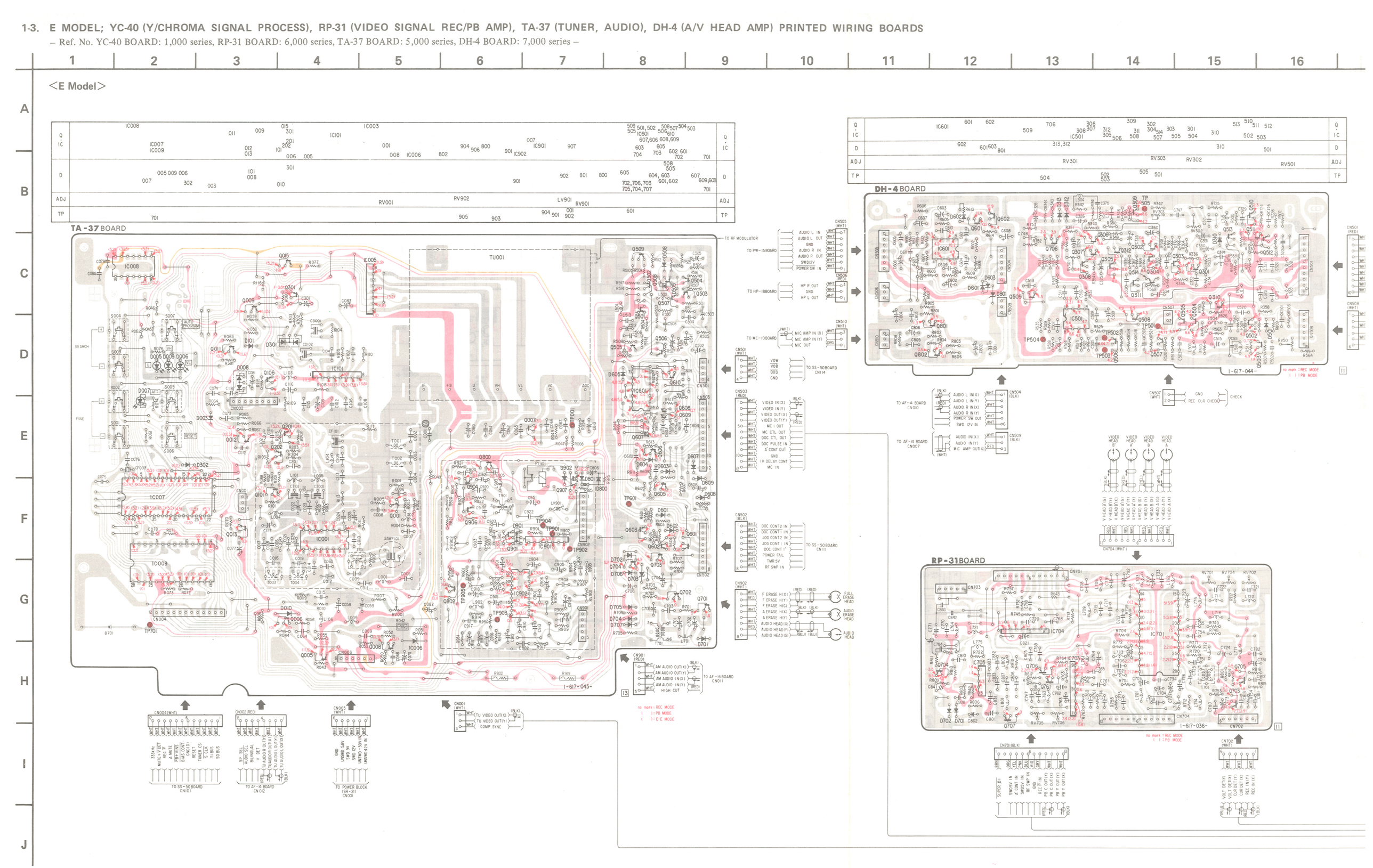

9 10 11 12 13 14 15 16 17 18 19 20 21 22 23 24

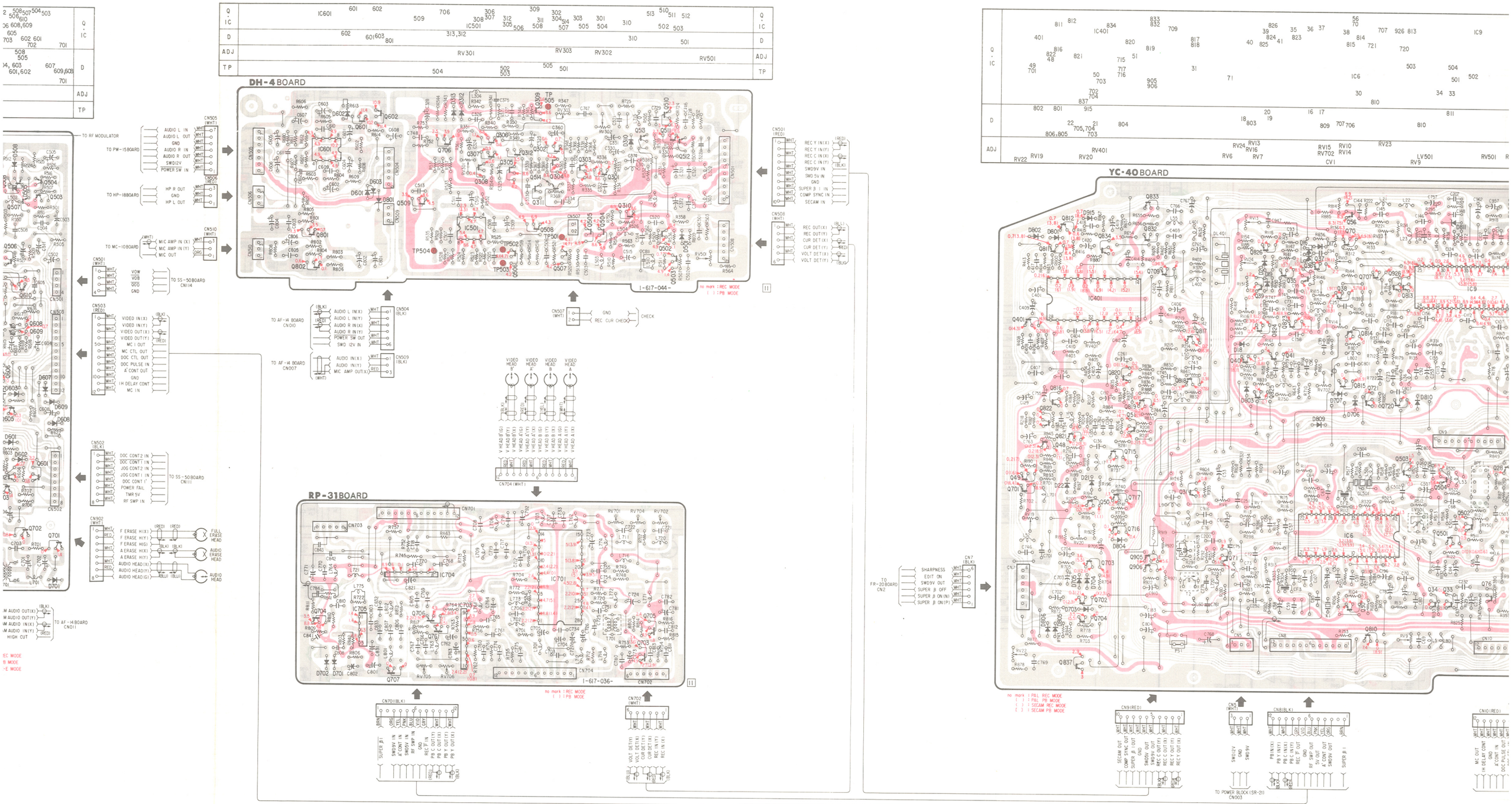

18 19 20 21 22 23 24 25 26 27 28 29 30 31 32 33

A B C D E F G H I J

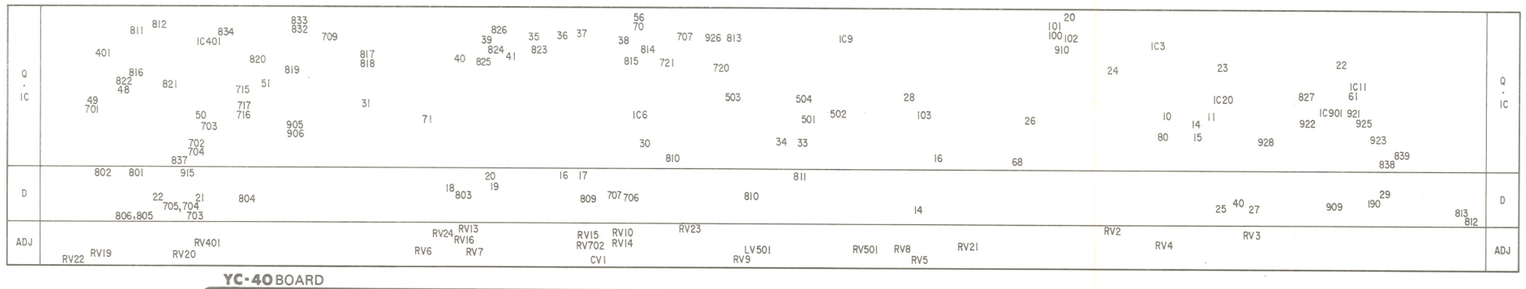

YC-40 BOARD

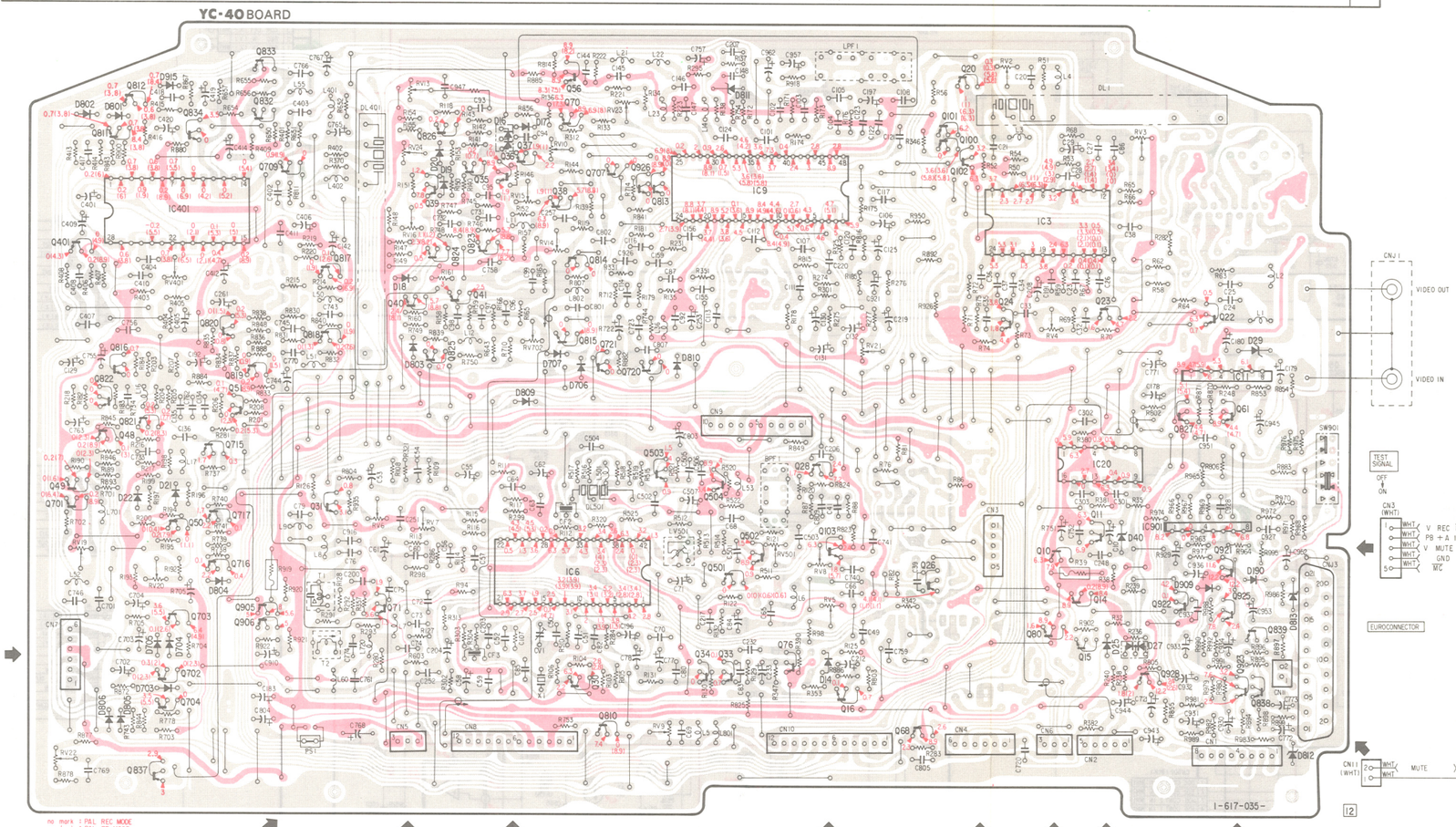

Note on Schematic Diagram:

- All resistors are in ohms, 1/6 W unless otherwise noted. kΩ: 1000 Ω, MΩ: 1000 kΩ
- All capacitors are in μF unless otherwise noted. p: μμF 50WV or less are not indicated except for electrolytics.
- All variable and adjustable resistors have characteristic curve B, unless otherwise noted.
- : nonflammable resistor.
- : fusible resistor.
- The red lines show the main voltages.
- All voltages are dc measured with a VOM (10 MΩ).
- : B+ bus.
- : B− bus.

Note: The components identified by shading and mark ⚠ are critical for safety. Replace only with part number specified.

Note on Printed Wiring Board:

- ○— : Indicates a leadwire mounted on the component side.
- —● : Indicates a leadwire mounted on the printed side.
- : soldering side.
- : B+ pattern
- : B− pattern
- Digital transistor (YC-40: Q15, 31, 35, 100, 101, 102, 702, 704, 707, 709, 720, 721, 810, 811, 812, 813, 814, 815, 826, 834, 910, 922, 926. RP-31: Q707. DH-4: Q311, 312. TA-36: Q003, 004, 006, 013, 014, 015, 301, 508, 601, 604, 605, 610, 703, 800, 802, 901) transistors with resistors.
  Refer to the YC-40, RP-31, DH-4, TA-36 boards schematic diagram for digital transistor.

When indicating parts by reference number, please include the board name.

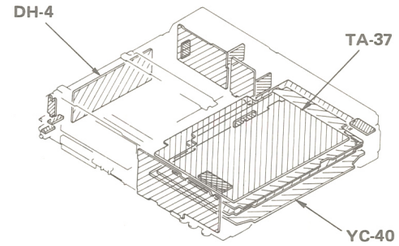

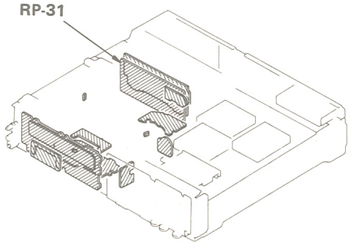

E MODEL; YC-40 (Y/CHROMA SIGNAL PROCESS), RP-31 (VIDEO SIGNAL REC/PB AMP), TA-37 (TUNER, AUDIO), DH-4 (A/V HEAD AMP) SCHEMATIC DIAGRAMS

– Ref. No. YC-40 BOARD: 1,000 series, RP-31 BOARD: 6,000 series, TA-37 BOARD: 5,000 series, DH-4 BOARD: 7,000 series –

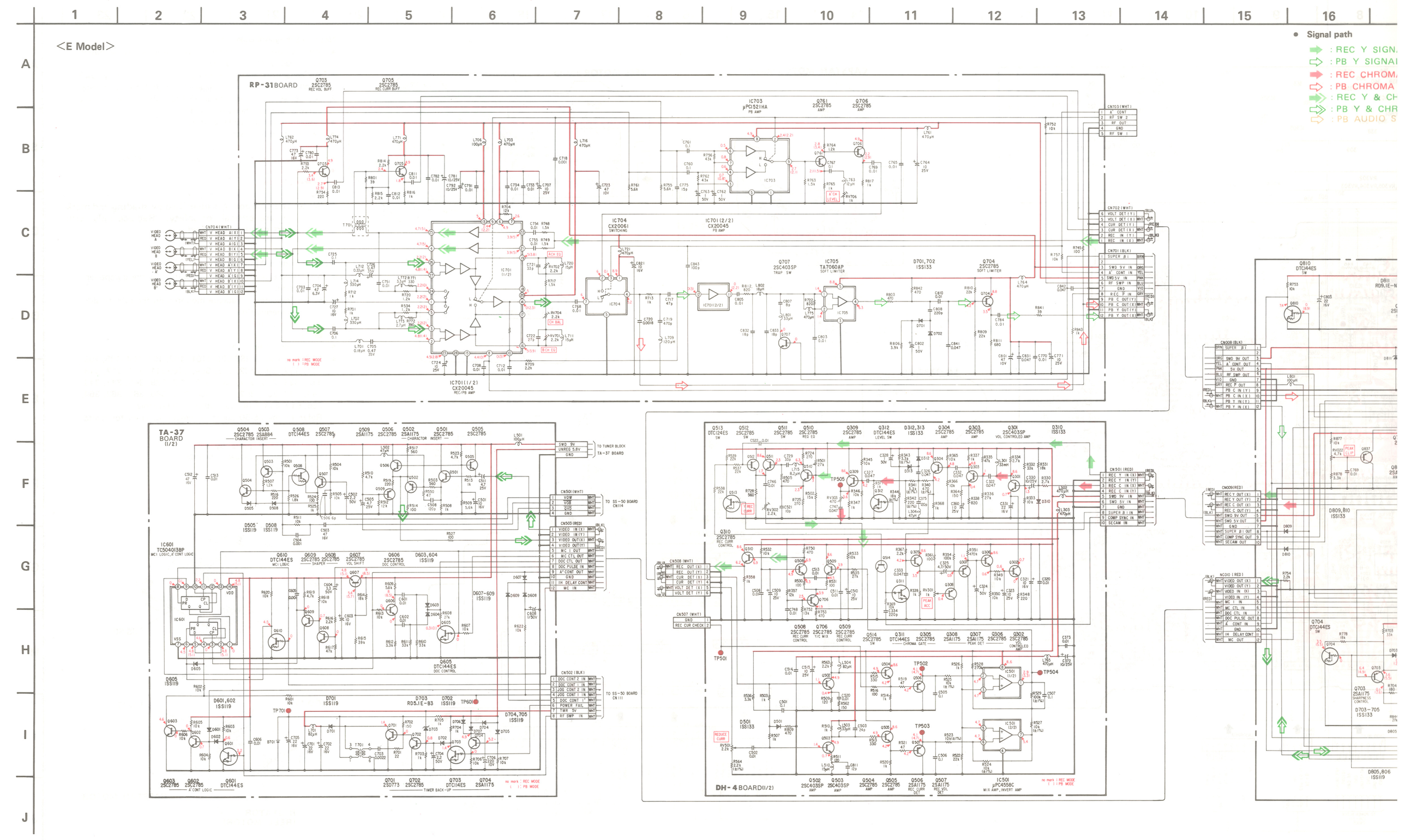

9 10 11 12 13 14 15 16 17 18 19 20 21 22 23 24 25

- **Signal path**
  - : REC Y SIGNAL
  - : PB Y SIGNAL
  - : REC CHROMA SIGNAL
  - : PB CHROMA SIGNAL
  - : REC Y & CHROMA SIGNAL
  - : PB Y & CHROMA SIGNAL
  - : PB AUDIO SIGNAL

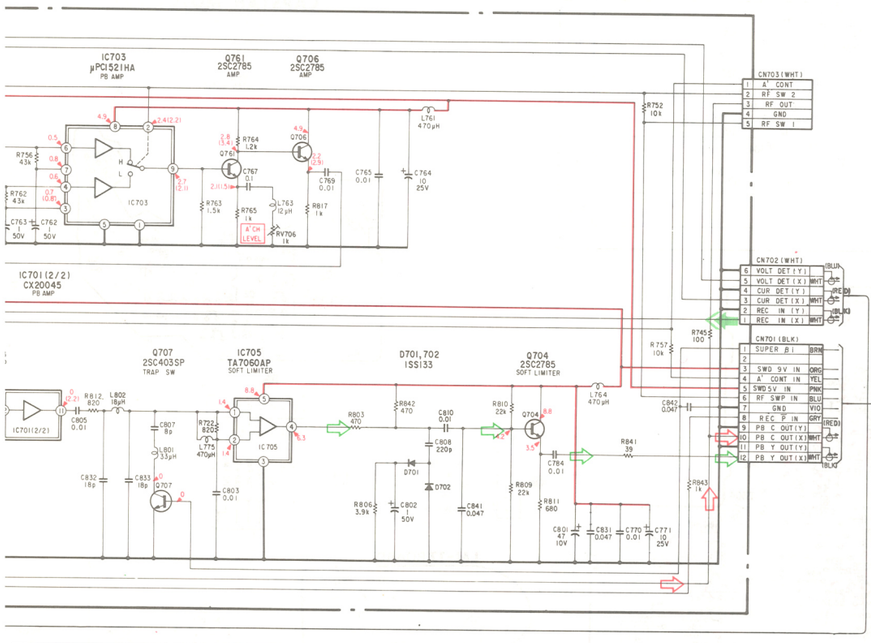

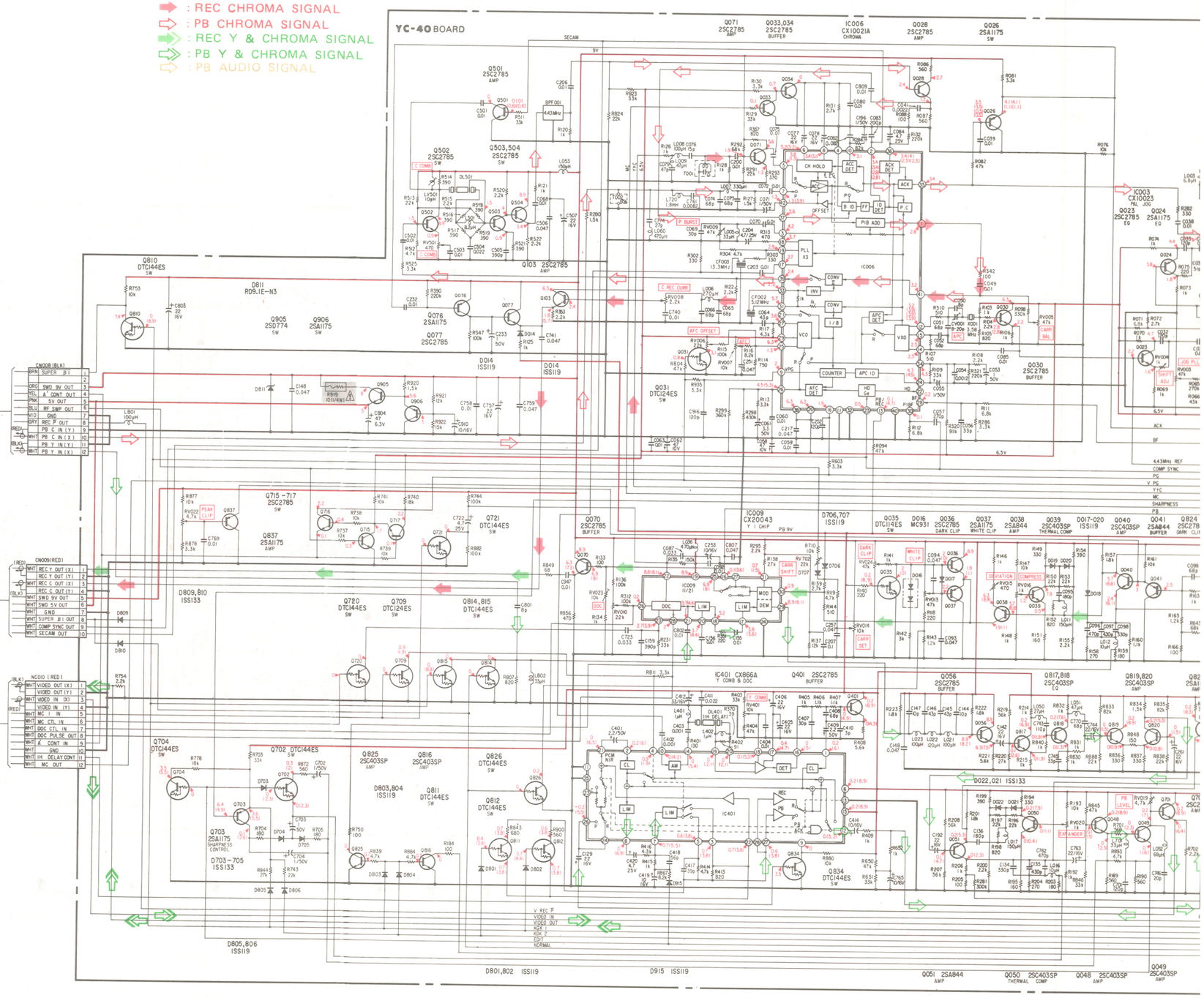

18 19 20 21 22 23 24 25 26 27 28 29 30 31 32 33

A B C D E F G H I J

YC-40 BOARD

IGNAL
NAL

SECAM

Q501 2SC2785 AMP
Q502 2SC2785 SW
Q503,504 2SC2785 SW
Q103 2SC2785 AMP
Q076 2SA1175
Q077 2SC2785
D014 ISS119
Q031 DTC124ES SW
Q905
Q721 DTC144ES SW
Q720 DTC144ES SW
Q709 DTC124ES SW
Q814,815 DTC144ES SW
Q825 2SC4093SP AMP
Q816 2SC4093SP AMP
Q826 DTC144ES SW
Q811 DTC144ES SW
Q812 DTC144ES SW
D803,804 ISS119
D801,802 ISS119
D915 ISS119

Q071 2SC2785 AMP
Q033,034 2SC2785 BUFFER
IC006 CX10021A CHROMA
Q028 2SC2785 AMP
Q026 2SA1175 SW
IC009 CX20043 Y I CHIP
Q070 2SC2785 BUFFER
D706,707 ISS119
Q035 DTC114ES SW
D016 MC931
Q036 2SC2785 DARK CLIP
Q037 2SA1175 WHITE CLIP
Q038 2SA844 AMP
Q039 2SC4035P THERMAL COMP
D017-020 ISS119
Q040 2SC4035P AMP
Q041 2SA844 BUFFER
Q824 2SC2785 DARK CLIP
Q823 2SA844 BUFFER
IC401 CX966A Y COMB & DOC
Q401 2SC2785 BUFFER
Q056 2SC2785 BUFFER
Q817,818 2SC4093SP EQ
Q819,820 2SC4093SP AMP
Q821 2SA1175 SW
Q822 2SC2785 AMP
D022,021 ISS133
Q832 2SC4093SP PHASE COMP
Q051 2SA844 AMP
Q050 2SC4093SP THERMAL COMP
Q048 2SC4093SP AMP
Q049 2SC4093SP AMP

IC003 CX10023 PSL JOG
Q023 2SC2785 EQ
Q024 2SA1175 EQ
Q020,019 2SA1175 SW
Q022 2SC2785 BUFFER
Q701 2SC2785 AMP
Q833 2SC4093SP PHASE COMP
Q827 2SC2785 BUFFER
Q061 2SC2785 BUFFER

D909 IOE2
Q923,925 2SC2785 AMP
Q921 2SA1175 SW
Q922 DTC124ES SW
D190 ISS119
D812,813 RD15Z-B
Q839 2SC2785 SW
Q838 2SC2785 SW
Q102 DTA144ES SW
Q910 DTC124ES SW
Q101 DTC144ES SW
Q100 DTC144WS SW
IC020 MC45388CP HD GEN
Q010 2SD774 SW
Q011 2SA1175 SW
Q015 2SC2785 SW
Q014 2SB733 DRIVE
D025 ISS119
D040 RD6.8E-B1
Q068,080 2SC2785 BUFFER
Q926 DTC144ES SW
Q707 DTC144ES SW
Q813 DTC144ES SW
Q928 2SC2785 SW
IC009 CX20043 Y CHIP
IC011 CX20061 SW
Q016 2SC2785 BUFFER
D027 MC921
D029 RD10E-B1
IC901 CX7926 TSG

CN001(WHT)
1 MUTE
TO AF-14 BOARD CN016

CN001(BLK)
1 AUDIO L IN (X)
2 AUDIO L IN (Y)
3 AUDIO R IN (X)
4 AUDIO R IN (Y)
5 AUDIO(L+R) IN (X)
6 AUDIO(L+R) IN (Y)
7 +LINE
8 SIF SEL
TO AF-14 BOARD CN009

CN03
1 AUDIO R OUT
2 AUDIO R IN
3 AUDIO L OUT
4 GND
8 VTR/TV
17 GND
9 VIDEO OUT
21 GND
21 PIN CONNECTOR EUROCONNECTOR

CN002(WHT)
1 AUDIO OUT (X)
2 AUDIO OUT (Y)
3 MIC OR SIF
4 VIDEO OUT (Y)
5 VIDEO OUT (X)
TO RF MODULATOR

CN004(WHT)
1 4.43MHz (X)
2 4.43MHz (Y)
3 RF SWP
4 GND
5 COMP SYNC
6 VTR/TV IN
TO SS-50 BOARD CN302

CN007(BLK)
1 SUPER B ON(P)
2 SUPER B ON(N)
3 SUPER B OFF
4 SWD 9V OUT
5 EDIT ON
6 SHARPNESS
TO FR-20 BOARD CN2

CN005(WHT)
1 SWD 12V
2 GND
3 SWD 9V
TO POWER BLOCK (SR-21) CN003

CN003(WHT)
1 V REC P
2 PB+A INS
3 V MUTE
4 GND
5 MIC
TO SS-50 BOARD CN103

CN006(WHT)
1 TU VIDEO IN (X)
2 TU VIDEO IN (Y)
3 COMP SYNC
TO TA-36/37 BOARD CN001

CNJ001
VIDEO IN
VIDEO OUT

4.43MHz REF
COMP SYNC
PG
V PG
Y+C
MIC
SHARPNESS
PB
ACK
BF
V REC P
VIDEO IN
VIDEO OUT
KGK 1
KGK 2
EDIT
NORMAL

1-4. SS-50 (SERVO, SYSTEM CONTROL), DR-33 (SYSTEM CONTROL, SIGNAL TRANSLATION), RD-

– Ref. No. SS-50 BOARD: 2,000 series, DR-33 BOARD: 9,300 series, RD-17 BOARD: 9,400 series, LM-17 BOARD: 9,40

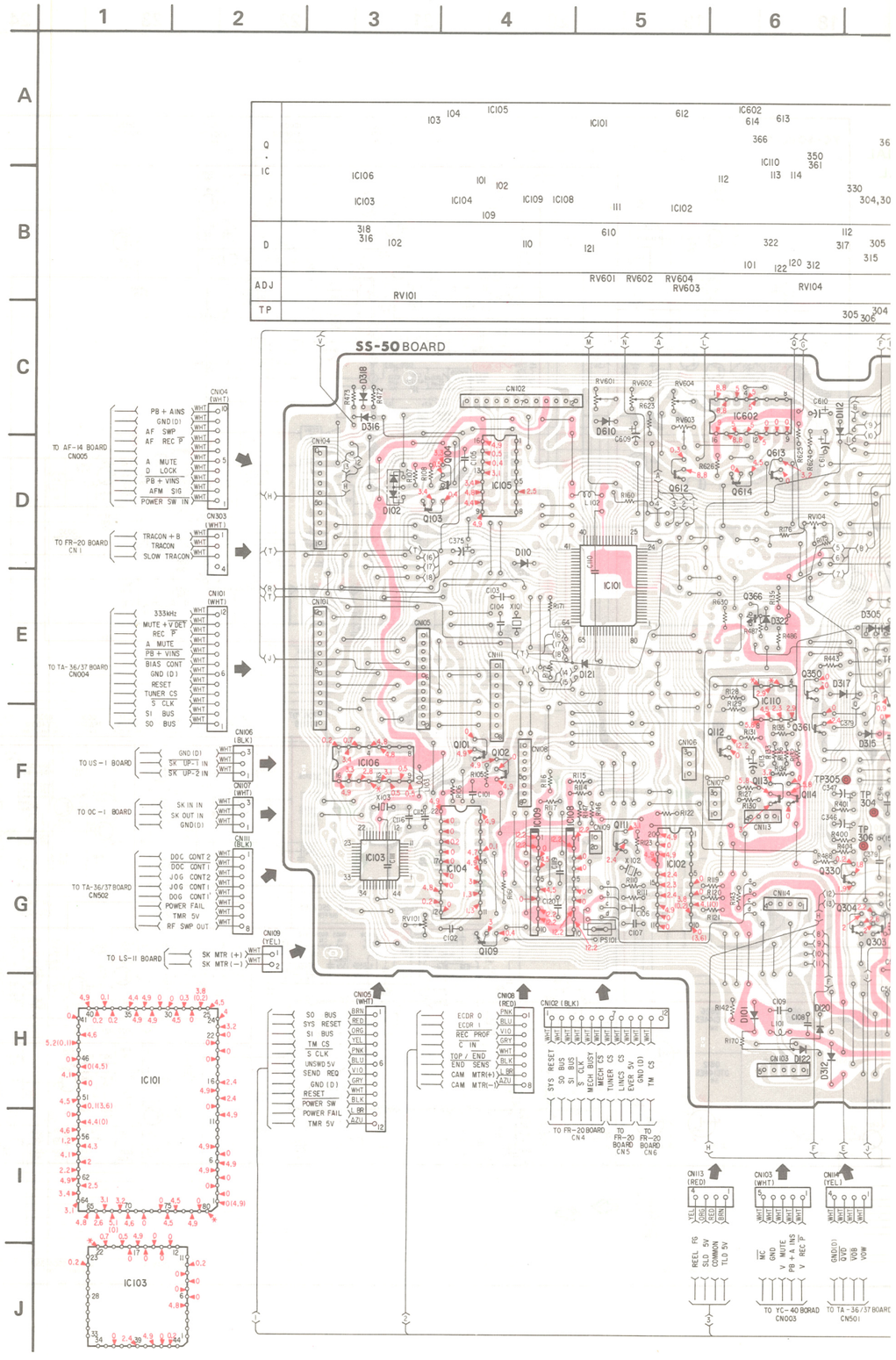

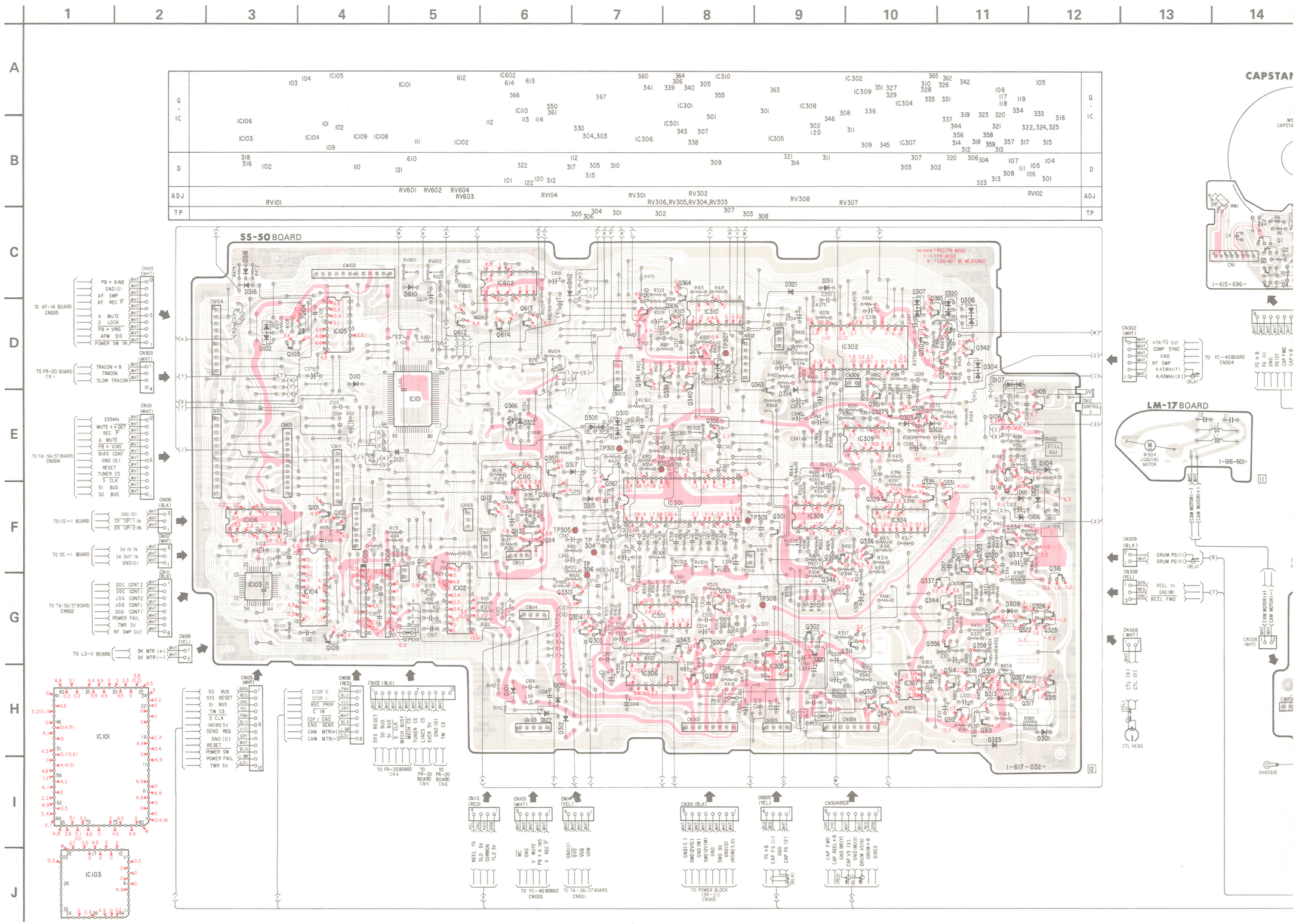
SS-50 BOARD
CAPSTAN
LM-17 BOARD
TO AF-14 BOARD CN005
TO FR-20 BOARD CN1
TO TA-36/37 BOARD CN004
TO US-1 BOARD
TO OC-1 BOARD
TO TA-36/37 BOARD CN502
TO LS-II BOARD
TO FR-20 BOARD CN4
TO FR-20 BOARD CN5
TO FR-20 BOARD CN6
TO YC-40 BOARD CN003
TO TA-36/37 BOARD CN501
TO POWER BLOCK (SR-21) CN005
TO YC-40BOARD CN004
CTL HEAD
CHASSIS
I-617-032-
I-615-696-
I-616-601-

TION DETECTOR), LM-17 (LOADING MOTOR), R STATOR (REEL MOTOR), CAPSTAN MOTOR PRINTED WIRING BOARDS

TATOR BOARD: 9,100 series, CAPSTAN MOTOR BOARD: 9,200 series –

8 9 10 11 12 13 14 15 16 17 18 19 20 21 22 23

A B C D E F G H I J

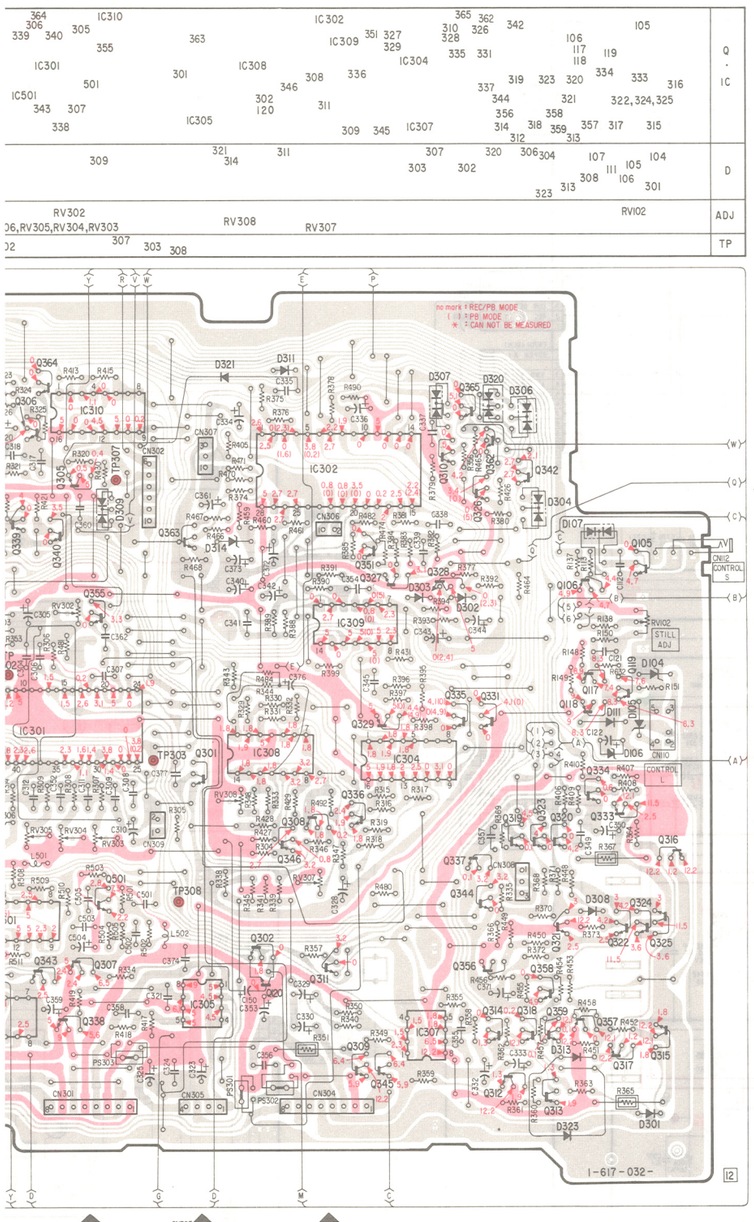

CAPSTAN MOTOR BOARD

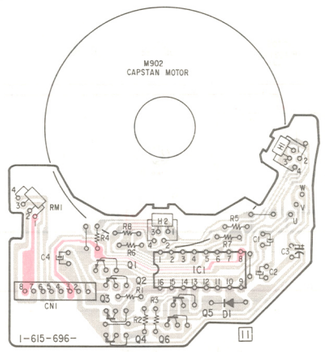

REEL MOTOR BOARD

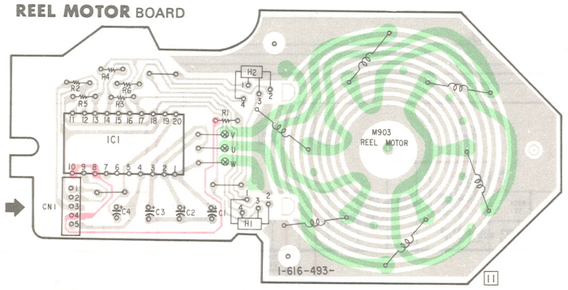

LM-17 BOARD

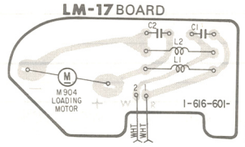

RD-17 BOARD

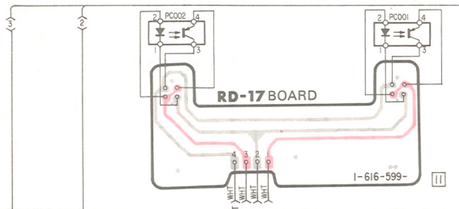

DR-33 BOARD

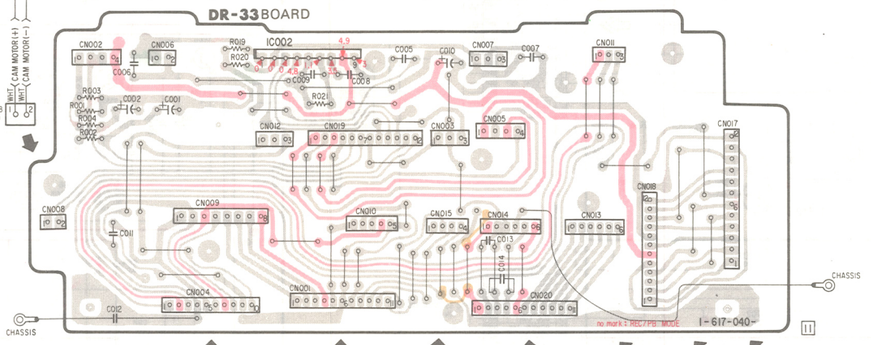

Note on Schematic Diagram:

- All resistors are in ohms, 1/6W unless otherwise noted. kΩ: 1000 Ω, MΩ: 1000 kΩ
- All capacitors are in μF unless otherwise noted. p: μμF 50WV or less are not indicated except for electrolytics.
- All variable and adjustable resistors have characteristic curve B, unless otherwise noted.
- : nonflammable resistor.
- : fusible resistor.
- The red lines show the main voltages.
- All voltages are dc measured with a VOM (10 MΩ).
- : B+ bus.
- : B– bus.

Note: The components identified by shading and mark ⚠ are critical for safety. Replace only with part number specified.

Note on Printed Wiring Board:

- : Indicates a leadwire mounted on the component side.
- : Indicates a leadwire mounted on the printed side.
- : soldering side.
- : B+ pattern
- : B– pattern
- : component side.
- Digital transistor (SS-50: Q101, 102, 103, 104, 105, 109, 111, 112, 301, 302, 303, 304, 310, 311, 314, 317, 318, 319, 323, 326, 327, 331, 335, 337, 339, 340, 341, 343, 344, 350, 351, 352, 353, 354, 355, 360, 361, 362, 364, 365, 612, 613, 614) transistors with resistors.
  Refer to the SS-50 baord schematic diagram for digital transistor.

When indicating parts by reference number, please include the board name.

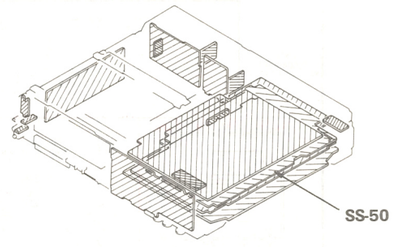

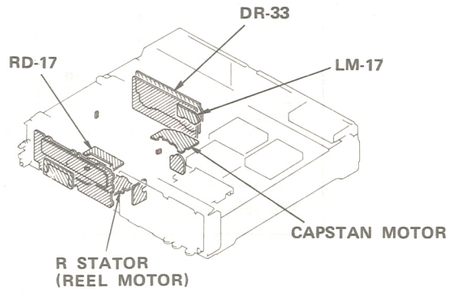

SS-50 (SERVO, SYSTEM CONTROL), DR-33 (SYSTEM CONTROL, SIGNAL TRANSLATION), RD-17 (ROTATION DETECTOR), LM-17 (LOADING MOTOR), R STATOR (REEL MOTOR), CAPSTAN MOTOR SCHEMATIC DIAGRAMS

– Ref. No. SS-50 BOARD: 2,000 series, DR-33 BOARD: 9,300 series, RD-17 BOARD: 9,400 series, LM-17 BOARD: 9,400 series, R STATOR BOARD: 9,100 series, CAPSTAN MOTOR BOARD: 9,200 series –

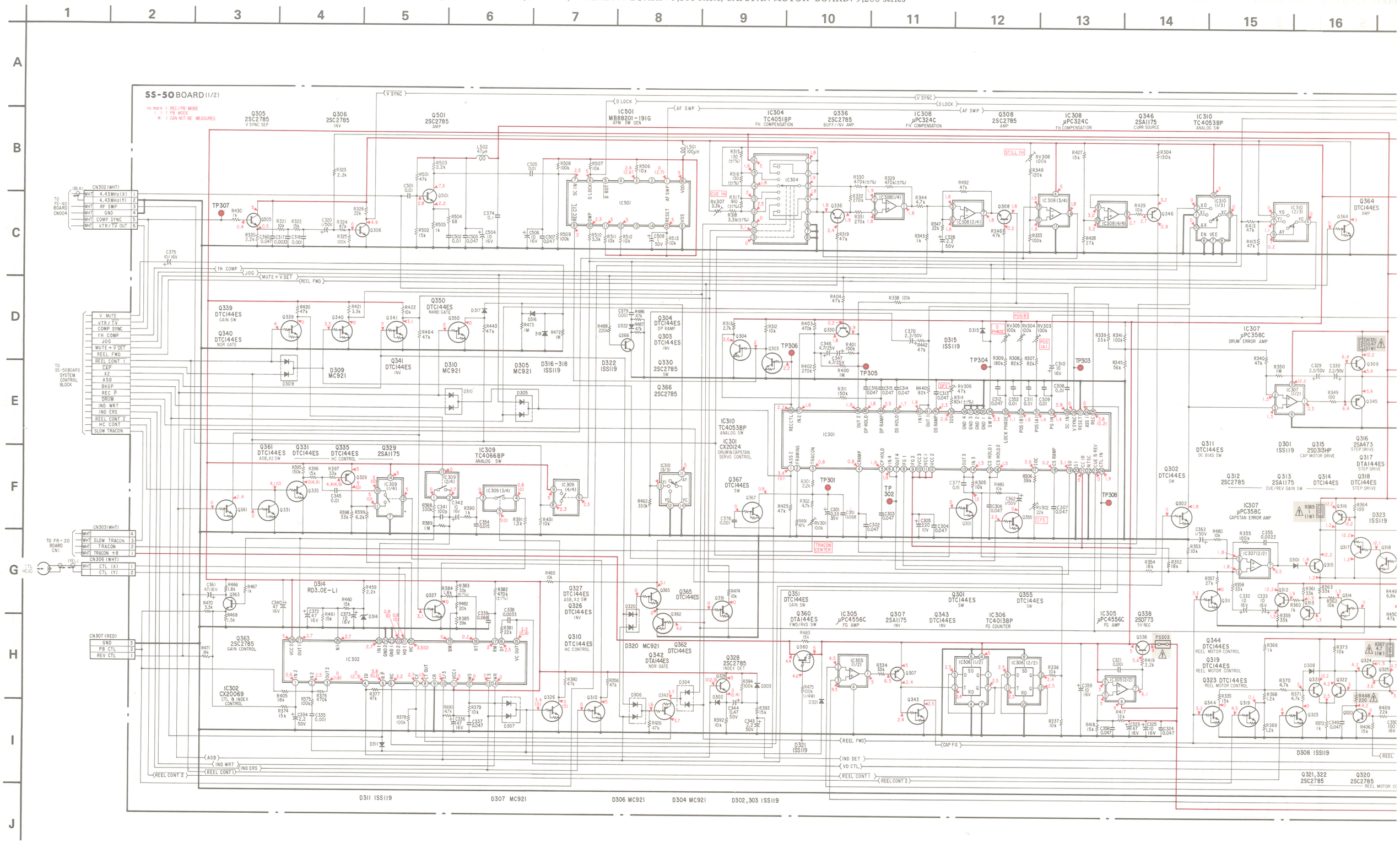

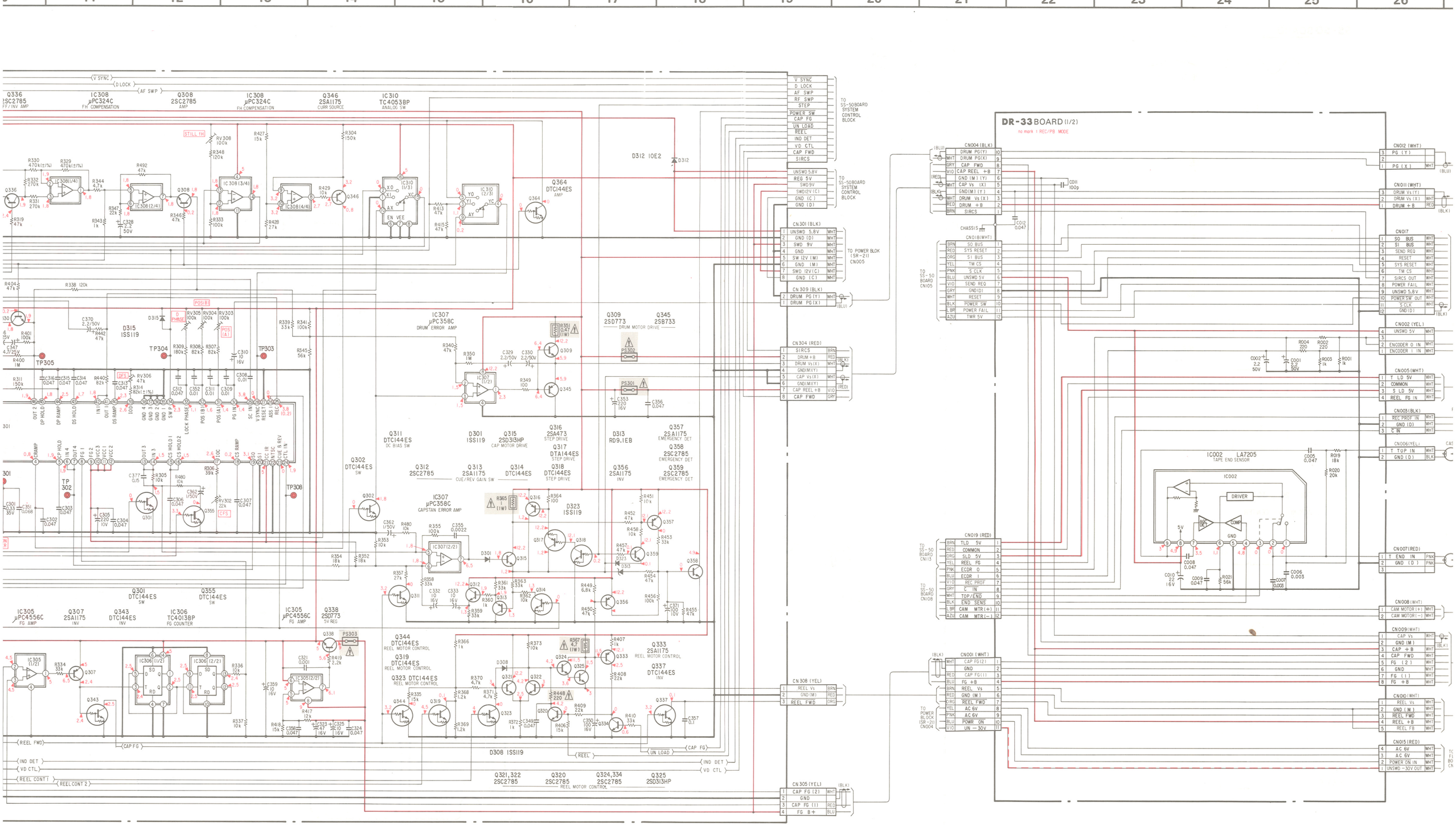
DR-33 BOARD (1/2)
no mark : REC/PB MODE
Q336 2SC2785 FF/INV AMP
IC308 µPC324C FH COMPENSATION
Q308 2SC2785 AMP
IC308 µPC324C FH COMPENSATION
Q346 2SA1175 CURR SOURCE
IC310 TC4053BP ANALOG SW
V SYNC
D LOCK
AF SWP
STILL FH
D312 10E2
Q364 DTC144ES AMP
TO SS-50BOARD SYSTEM CONTROL BLOCK
TO POWER BLOK (SR-21) CN005
IC307 µPC358C DRUM ERROR AMP
Q309 2SD773 DRUM MOTOR DRIVE
Q345 2SB733
PS302
PS301
Q311 DTC144ES DC BIAS SW
D301 1SS119
Q315 2SD313HP CAP MOTOR DRIVE
Q316 2SA473 STEP DRIVE
Q317 DTA144ES STEP DRIVE
Q318 DTC144ES STEP DRIVE
D313 RD9.1EB
Q357 2SA1175 EMERGENCY DET
Q358 2SC2785 EMERGENCY DET
Q356 2SA1175 INV
Q359 2SC2785 EMERGENCY DET
Q302 DTC144ES SW
Q312 2SC2785
Q313 2SA1175 CUE/REV GAIN SW
Q314 DTC144ES STEP DRIVE
IC307 µPC358C CAPSTAN ERROR AMP
D323 1SS119
Q301 DTC144ES SW
Q355 DTC144ES SW
IC305 µPC4556C FG AMP
Q307 2SA1175 INV
Q343 DTC144ES INV
IC306 TC4013BP FG COUNTER
IC305 µPC4556C FG AMP
Q338 2SD773 5V REG
Q344 DTC144ES REEL MOTOR CONTROL
Q319 DTC144ES REEL MOTOR CONTROL
Q323 DTC144ES REEL MOTOR CONTROL
Q333 2SA1175 REEL MOTOR CONTROL
Q337 DTC144ES INV
D308 1SS119
Q321,322 2SC2785
Q320 2SC2785
Q324,334 2SC2785
Q325 2SD313HP
REEL MOTOR CONTROL
CN309 (BLK)
CN304 (RED)
CN308 (YEL)
CN305 (YEL)
CN004 (BLK)
CN001 (WHT)
CN019 (RED)
CN012 (WHT)
CN011 (WHT)
CN017
CN002 (YEL)
CN005 (WHT)
CN003 (BLK)
CN006 (YEL)
CN007 (RED)
CN008 (WHT)
CN009 (WHT)
CN010 (WHT)
CN015 (RED)
IC002 LA7205 TAPE END SENSOR
TO SS-50 BOARD CN105
TO SS-50 BOARD CN013
TO SS-50 BOARD CN108
TO POWER BLOCK (SR-21) CN004
REEL FWD
CAP FG
IND DET
VD CTL
REEL CONT
REEL CONT 2
UN LOAD
REEL

18 19 20 21 22 23 24 25 26 27 28 29 30 31 32 33

A B F G H I J

DR-33 BOARD (1/2)

no mark : REC/PB MODE

V SYNC
D LOCK
AF SWP
RF SWP
STEP
POWER SW
CAP FG
UN LOAD
REEL
IND DET
VD CTL
CAP FWD
SIRCS

TO SS-50BOARD SYSTEM CONTROL BLOCK

UNSWD 5.8V
REG 5V
SWD 9V
SWD12V (C)
GND (C)
GND (D)

TO SS-50BOARD SYSTEM CONTROL BLOCK

312 10E2 D312

CN301 (BLK)

1	UNSWD 5.8V	WHT
2	GND (D)	WHT
3	SWD 9V	WHT
4	GND	WHT
5	SW 12V (M)	WHT
6	GND (M)	WHT
7	SWD 12V (C)	WHT
8	GND (C)	WHT

TO POWER BLOK (SR-21) CN005

CN309 (BLK)

2	DRUM PG (Y)	WHT
1	DRUM PG (X)	WHT

(BLU)

Q345 2SB733 OTOR DRIVE

CN304 (RED)

1	SIRCS	BRN
2	DRUM +B	RED
3	DRUM Vs (X)	WHT
4	GND (M) (Y)	
5	CAP Vs (X)	WHT
6	GND (M) (Y)	
7	CAP REEL +B	VIO
8	CAP FWD	GRY

(BLK) (RED)

C356 0.047

Q357 2SA1175 EMERGENCY DET

Q358 2SC2785 EMERGENCY DET

Q359 2SC2785 EMERGENCY DET

R451 10k R453 33k R454 47k R456 100k R455 47k C371 100 10V

Q333 2SA1175 REEL MOTOR CONTROL

Q337 DTC144ES INV

C357 0.1

CAP FG
UN LOAD
IND DET
VD CTL

Q325 2SD313HP

CN305 (YEL)

1	CAP FG (2)	WHT
2	GND	
3	CAP FG (1)	RED
4	FG B+	BLU

(BLK)

CN308 (YEL)

1	REEL Vs	BRN
2	GND (M)	RED
3	REEL FWD	ORG

CN004 (BLK)

	DRUM PG (Y)	10
WHT	DRUM PG (X)	9
GRY	CAP FWD	8
VIO	CAP REEL +B	7
	GND (M) (Y)	6
WHT	CAP Vs (X)	5
	GND (M) (Y)	4
WHT	DRUM Vs (X)	3
RED	DRUM +B	2
BRN	SIRCS	1

(BLU) (RED) (BLK)

C011 100p

C012 0.047

CHASSIS

CN018(WHT)

BRN	SO BUS	1
RED	SYS RESET	2
ORG	SI BUS	3
YEL	TM CS	4
PNK	S CLK	5
BLU	UNSWD 5V	6
VIO	SEND REQ	7
GRY	GND (D)	8
WHT	RESET	9
BLK	POWER SW	10
L BR	POWER FAIL	11
AZU	TMR 5V	12

TO SS-50 BOARD CN105

CN001 (WHT)

WHT	CAP FG (2)	1
	GND	2
RED	CAP FG (1)	3
BLU	FG +B	4
BRN	REEL Vs	5
RED	GND (M)	6
ORG	REEL FWD	7
YEL	AC 6V	8
PNK	AC 6V	9
BLU	POWR ON	10
VIO	UN −30V	11

(BLK)

TO POWER BLOCK (SR-21) CN004

CN019 (RED)

BRN	TLD 5V	1
RED	COMMON	2
ORG	SLD 5V	3
YEL	REEL FG	4
PNK	ECDR 0	5
BLU	ECDR 1	6
VIO	REC PROF	7
GRY	C IN	8
WHT	TOP/END	9
BLK	END SENS	10
L BR	CAM MTR (+)	11
AZU	CAM MTR (−)	12

TO SS-50 BOARD CN113

TO SS-50 BOARD CN108

R004 220 R002 220 C002 2.2 50V C001 2.2 50V R003 1k R001 1k

IC002 LA7205 TAPE END SENSOR

C005 0.047 R019 18k R020 20k

IC002

DRIVER

REC DET COMP

5V GND

C010 22 16V C008 0.047 C009 0.047 R021 56k C007 0.005 C006 0.003

CN012 (WHT)

3	PG (Y)	
2		
1	PG (X)	WHT

(BLU) PG COIL

CN011 (WHT)

3	DRUM Vs (Y)	
2	DRUM Vs (X)	WHT
1	DRUM + B	RED

(BLK) M901 DRUM MOTOR

CN017

1	SO BUS	WHT
2	SI BUS	WHT
3	SEND REQ	WHT
4	RESET	WHT
5	SYS RESET	WHT
6	TM CS	WHT
7	SIRCS OUT	WHT
8	POWER FAIL	WHT
9	UNSWD 5.8V	WHT
10	POWER SW OUT	WHT
11	S CLK	WHT
12	GND (D)	WHT

(BLK) TO FL-9 BOARD CN102

CN002 (YEL)

4	UNSWD 5V	WHT
3		
2	ENCODER 0 IN	WHT
1	ENCODER 1 IN	WHT

S902 ROTARY ENCODER

CN005(WHT)

1	T LD 5V	WHT
2	COMMON	WHT
3	S LD 5V	WHT
4	REEL FG IN	WHT

S901-1 REC PROOF

CN003(BLK)

1	REC PROF IN	WHT
2	GND (D)	WHT
3	C IN	WHT

S901-2 CASSETTE IN

CN006(YEL)

1	T TOP IN	WHT
2	GND (D)	BLK

T COIL SENSOR

CN007(RED)

1	T END IN	PNK
2	GND (D)	PNK
3		

S COIL SENSOR

CN008 (WHT)

1	CAM MOTOR (+)	WHT
2	CAM MOTOR (−)	WHT

CN009(WHT)

1	CAP Vs	WHT
2	GND (M)	
3	CAP +B	WHT
4	CAP FWD	WHT
5	FG (2)	WHT
6	GND	WHT
7	FG (1)	WHT
8	FG +B	WHT

(BLK)

CN010(WHT)

1	REEL Vs	WHT
2	GND (M)	WHT
3	REEL FWD	WHT
4	REEL +B	WHT
5	REEL FB	WHT

CN015(RED)

4	AC 6V	WHT
3	AC 6V	WHT
2	POWER ON IN	WHT
1	UNSWD −30V OUT	WHT

TO FL-9 BOARD CN101

RD-17 BOARD

WHT	T LD 5V	1
WHT	COMMON OUT	2
WHT	S LD 5V	3
WHT	REEL FG OUT	4

PC002 PC001

PC001,002 NJL5141E-AC

LM-17 BOARD

L1 18μH C1 0.033 C2 0.033 L2 18μH

WHT	CAM MOTOR (+)	1
WHT	CAM MOTOR (−)	2

M904 LOADING MOTOR

CAPSTAN MOTOR BOARD (M902)

U V W CNP2

D1 Q1 Q2 Q3 Q4 Q5 Q6 C1 C2 C3 C4 R1 R2 R3 RM1

CN1(WHT)

1	CAP Vs	WHT
2	GND(M)	WHT
3	CAP+B	WHT
4	CAP FWD	WHT
5	FG(2)	WHT
6	GND	WHT
7	FG(1)	WHT
8	FG+B	WHT

(BLK)

IC1 INPUT AMP PHASE SW 3 PHASE 120° LOGIC OUTPUT AMP

R4 R5 R6 R7 R8 HI H2

REEL MOTOR BOARD (M903)

CN1(WHT)

WHT	REEL FG	5
WHT	REEL +B	4
WHT	REEL −B	3
WHT	GND(M)	2
WHT	REEL Vs	1

HI,2 THS103A-1

IC1 LB1620

AMP LOGIC SECTION CONTROL BLOCK P(SOURCE) N(SINK) VCC2 VCC1 GND FRC STOP VC CD RF

R1 470 R2 1.5k R3 47k R4 47k R5 47k R6 47k C1 47 16V C2 47 16V C3 47 16V C4 47 16V

SS-50 BOARD

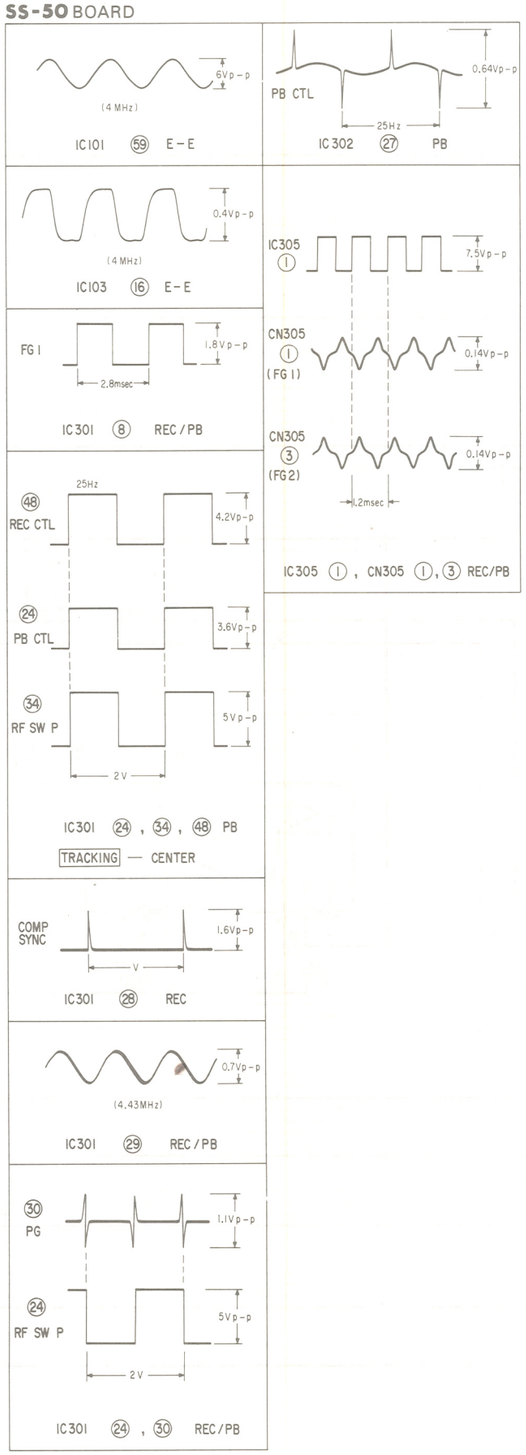

- ○— : Indicates a leadwire mounted on the component side.
- ●— : Indicates a leadwire mounted on the printed sied.
- ▒▒ : soldering side.
- ▒▒ : B+ pattern
- Digital transistor (SS-50: Q101, 102, 103, 104, 105, 109, 111, 112, 301, 302, 303, 304, 310, 311, 314, 317, 318, 319, 323, 326, 327, 331, 335, 337, 339, 340, 341, 343, 344, 350, 351, 352, 353, 354, 355, 360, 361, 362, 364, 365, 612, 613, 614. QV-1: Q200, 201, 202, 203) transistors with resistors.
  Refer to the SS-50 and QV-1 boards schematic diagram for digital transistor.

When indicating parts by reference number, please include the board name.

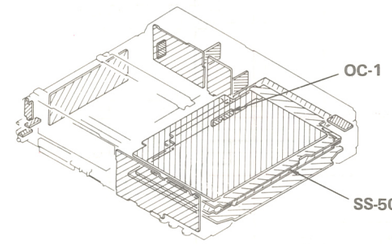

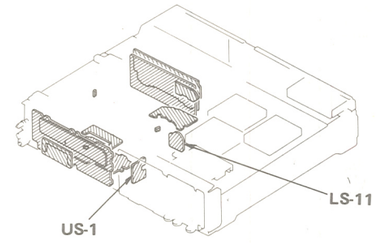

1-5. SS-50 (SERVO, SYSTEM CONTROL), OC-1 (SKIP SWITCH), US-1 (SKIP SWITCH), LS-11 (SKATE MOTOR) PRINTED WIRING BOARDS

– Ref. No. SS-50 BOARD: 2,000 series, OC-1 BOARD: 9,500 series, US-1 BOARD: 9,500 series, LS-11 BOARD: 9,500 series –

1 2 3 4 5 6 7 8 9 10 11 12

A B C D E F G H I J

- ○— : Indicates a leadwire mounted on the component side.
- ●— : Indicates a leadwire mounted on the printed sied.
- ▨ : soldering side.
- ▨ : B+ pattern
- Digital transistor (SS-50: Q101, 102, 103, 104, 105, 109, 111, 112, 301, 302, 303, 304, 310, 311, 314, 317, 318, 319, 323, 326, 327, 331, 335, 337, 339, 340, 341, 343, 344, 350, 351, 352, 353, 354, 355, 360, 361, 362, 364, 365, 612, 613, 614. QV-1: Q200, 201, 202, 203) transistors with resistors.
  Refer to the SS-50 and QV-1 boards schematic diagram for digital transistor.

When indicating parts by reference number, please include the board name.

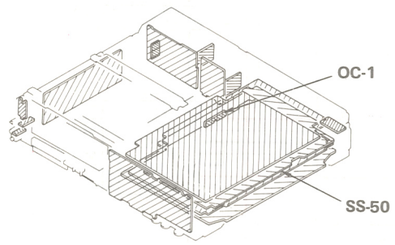

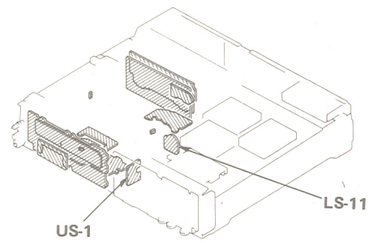

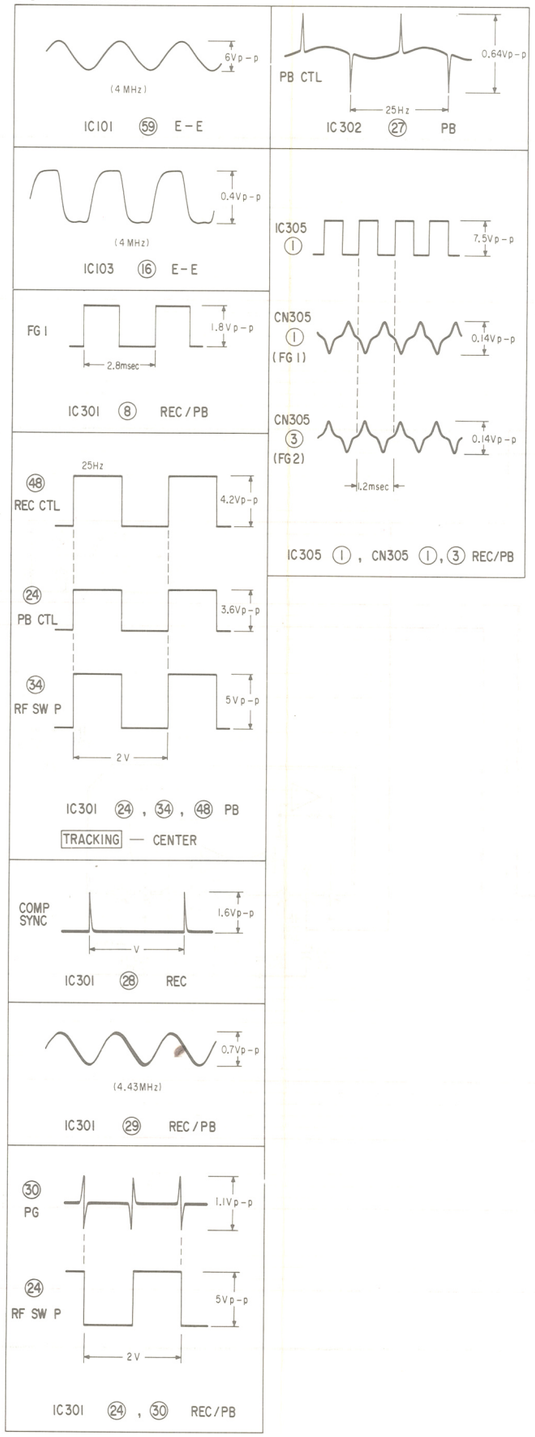

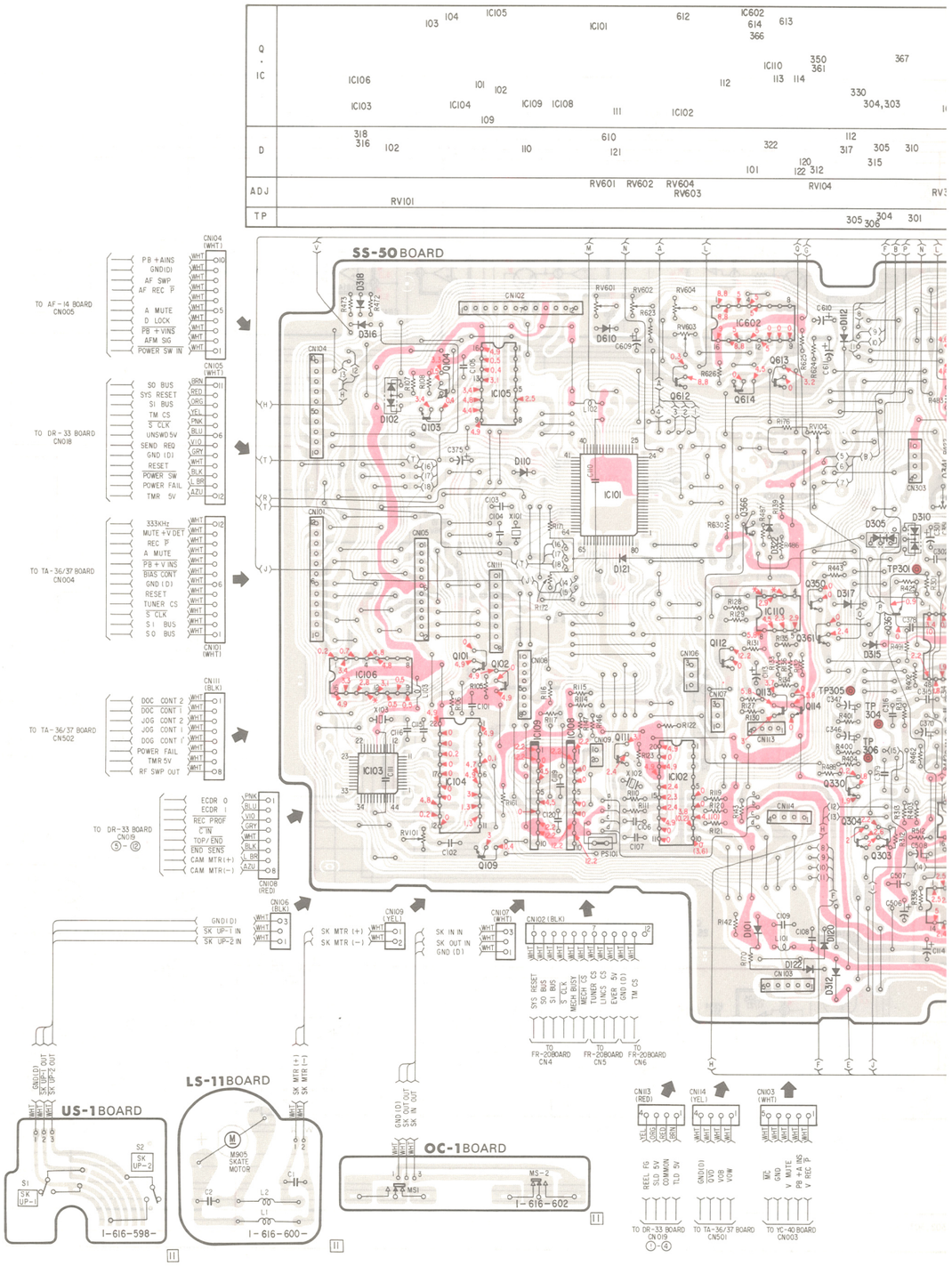

5 6 7 8 9 10 11 12 13 14 15 16 17 18 19 20

A B C D E F G H I J

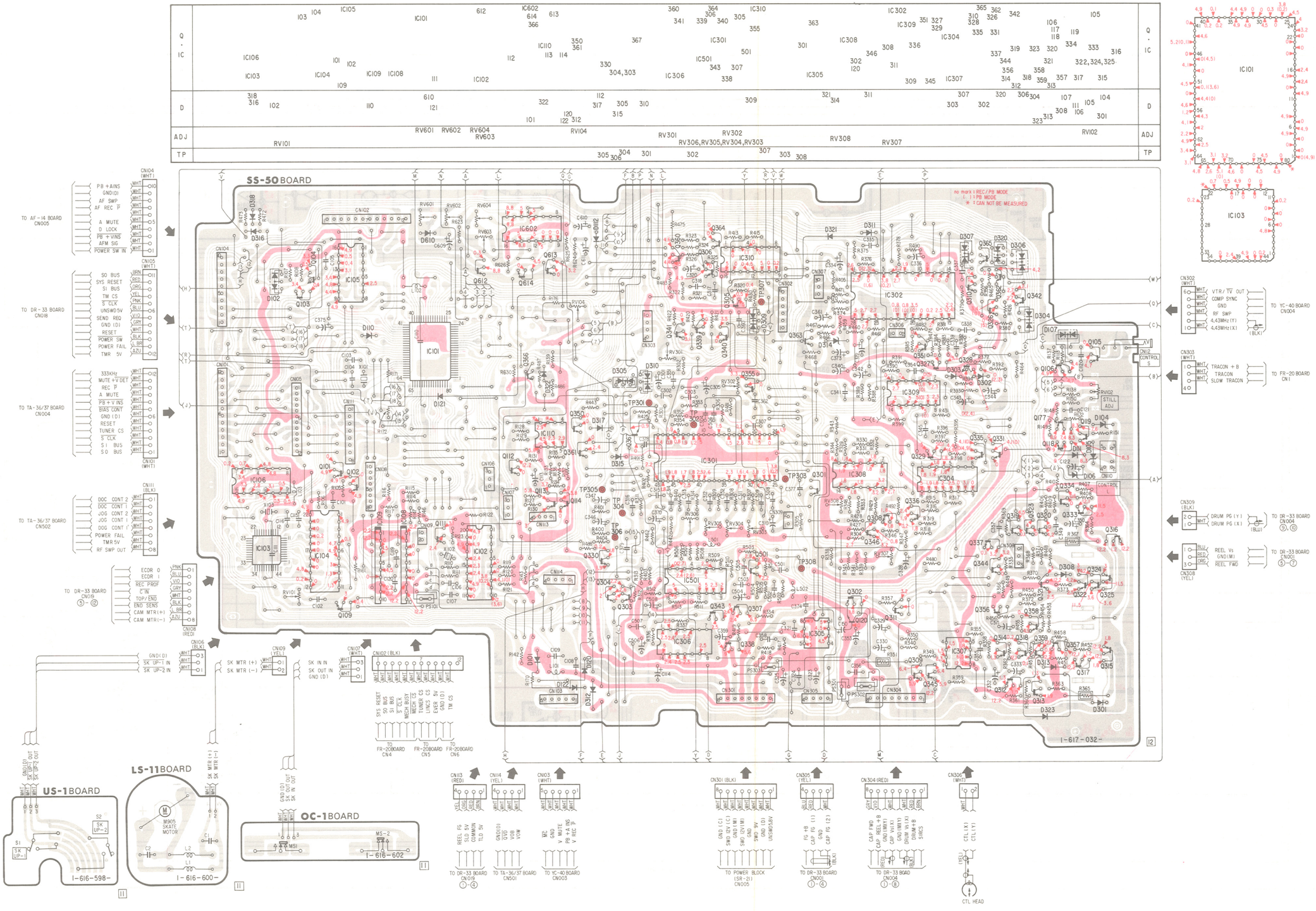

SS-50 (SERVO, SYSTEM CONTROL), OC-1 (SKIP SWITCH), US-1 (SKIP SWITCH), LS-11 (SKATE MOTOR) SCHEMATIC DIAGRAMS

– Ref. No. SS-50 BOARD: 2,000 series, OC-1 BOARD: 9,500 series, US-1 BOARD: 9,500 series, LS-11 BOARD: 9,500 series –

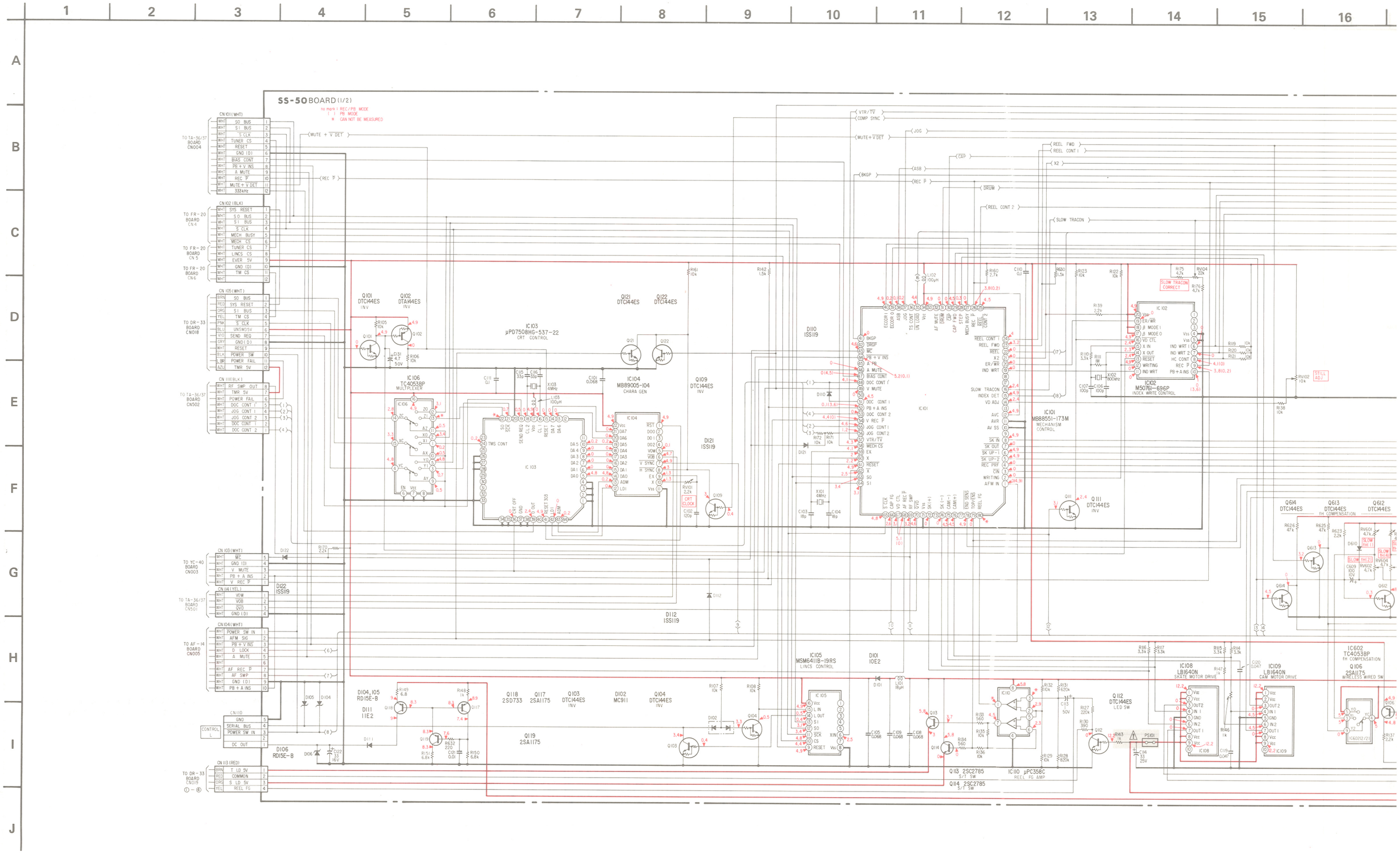

- All resistors are in ohms, 1/6 W unless otherwise noted. kΩ: 1000 Ω, MΩ: 1000 kΩ
- All capacitors are in μF unless otherwise noted. p: μμF 50WV or less are not indicated except for electrolytics.
- All variable and adjustable resistors have characteristic curve B, unless otherwise noted.
- : nonflammable resistor.
- : fusible resistor.
- The red lines show the main voltages.
- All voltages are dc measured with a VOM (10 MΩ).
- : B+ bus.

Note: The components identified by shading and mark ⚠ are critical for safety. Replace only with part number specified.

When indicating parts by reference number, please include the board name.

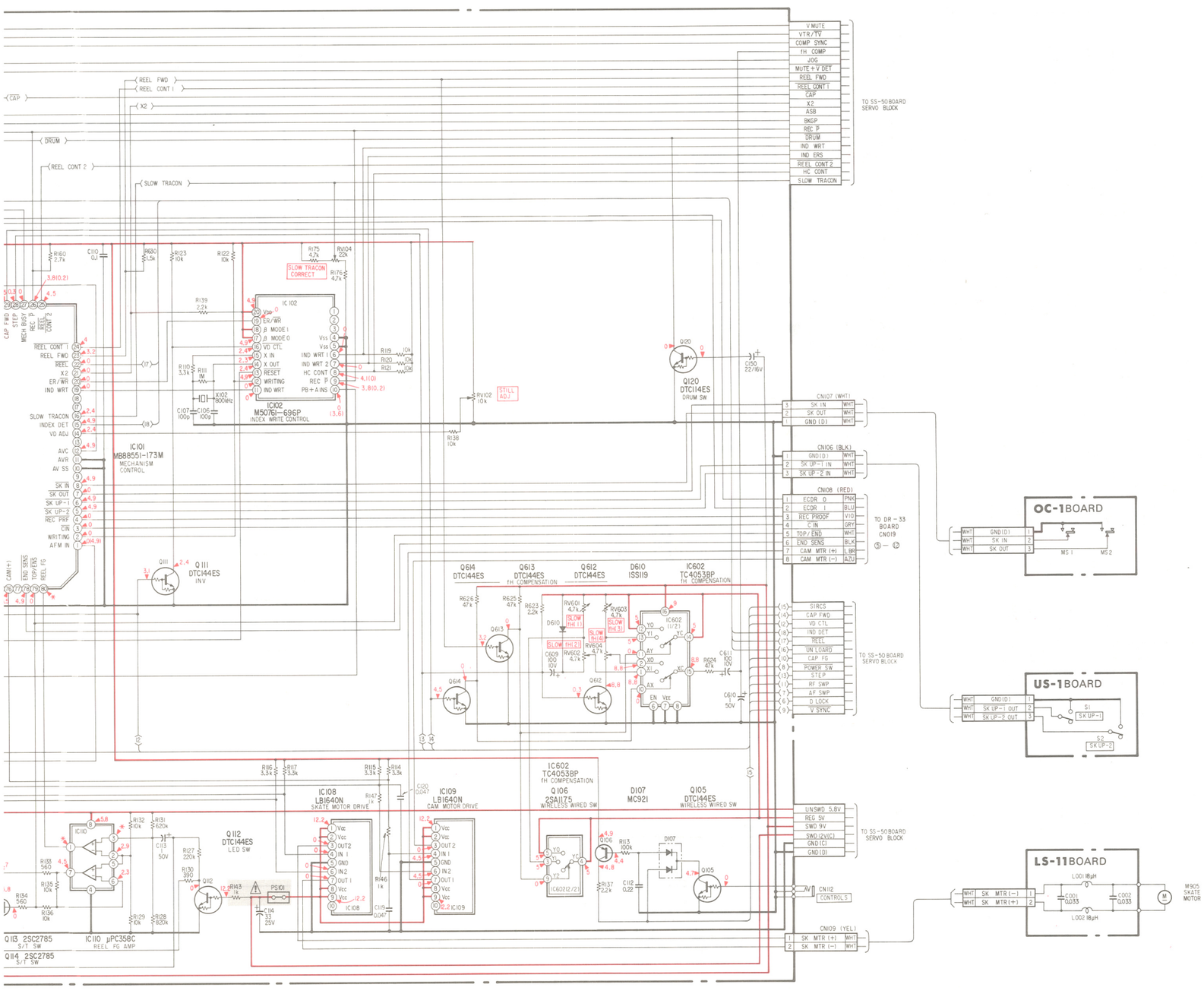

SYSTEM CONTROL

18 19 20 21 22 23 24 25 26 27

A B C D E F G H I J

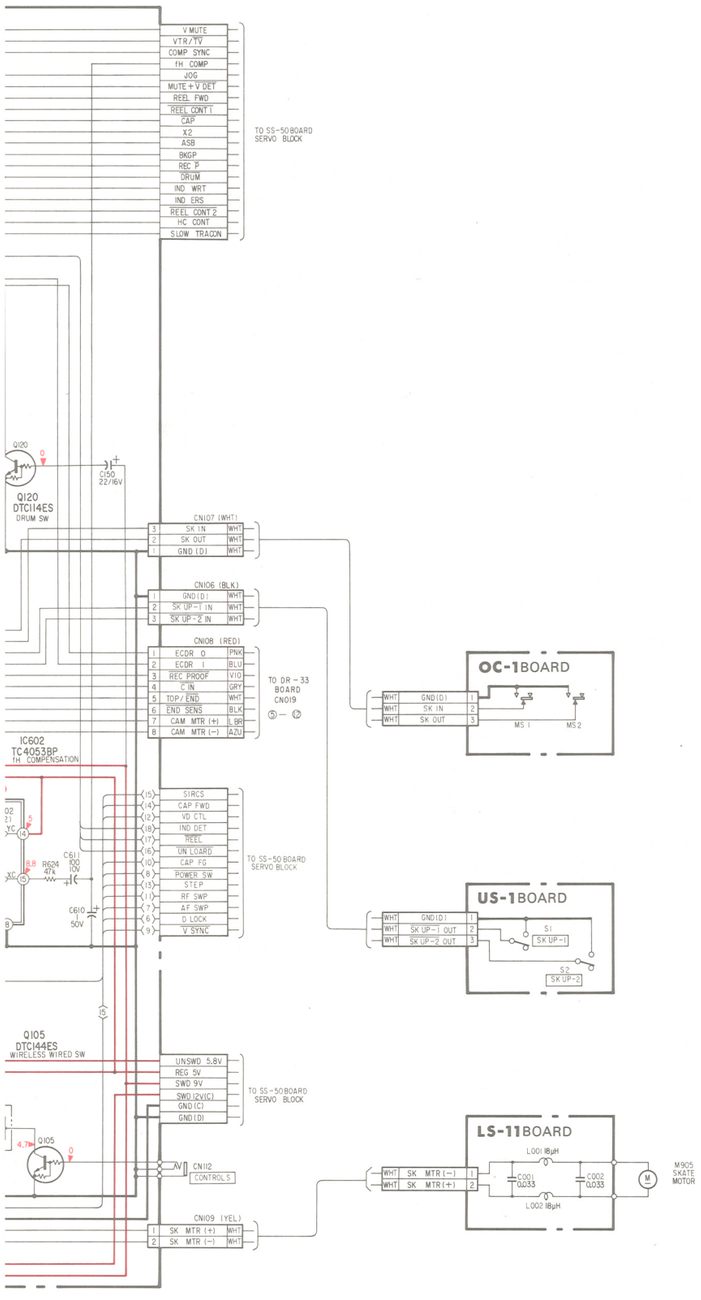

- All resistors are in ohms, 1/6W unless otherwise noted. kΩ: 1000 Ω, MΩ: 1000 kΩ
- All capacitors are in μF unless otherwise noted. p: μμF 50WV or less are not indicated except for electrolytics.
- All variable and adjustable resistors have characteristic curve B, unless otherwise noted.
- : nonflammable resistor.
- : fusible resistor.
- The red lines show the main voltages.
- All voltages are dc measured with a VOM (10 MΩ).
- : B+ bus.

Note: The components identified by shading and mark ⚠ are critical for safety. Replace only with part number specified.

When indicating parts by reference number, please include the board name.

1-6. AF-14 (AFM SIGNAL PROCESS), PJ-3 (AUDIO IN/OUT JACKS), FL-8 (INDICATOR), DH-4 (A/V HEAD AMP), PW-15 (POWER SWITCH, HEADPHONE LEVEL), DR-33 (SYSTEM CONTROL, SIGNAL TRANSLATION), MC-10 (MICROPHONE JACK), HP-18 (HE

– Ref. No. AF-14 BOARD: 3,000 series, PJ-3 BOARD: 9,500 series, FL-8 BOARD: 9,600 series, DH-4 BOARD: 7,000 series, PW-15 BOARD: 12,000 series, DR-33 BOARD: 9,300 series, MC-10 BOARD: 13,000 series, HP-18 BOARD: 9,800 series –

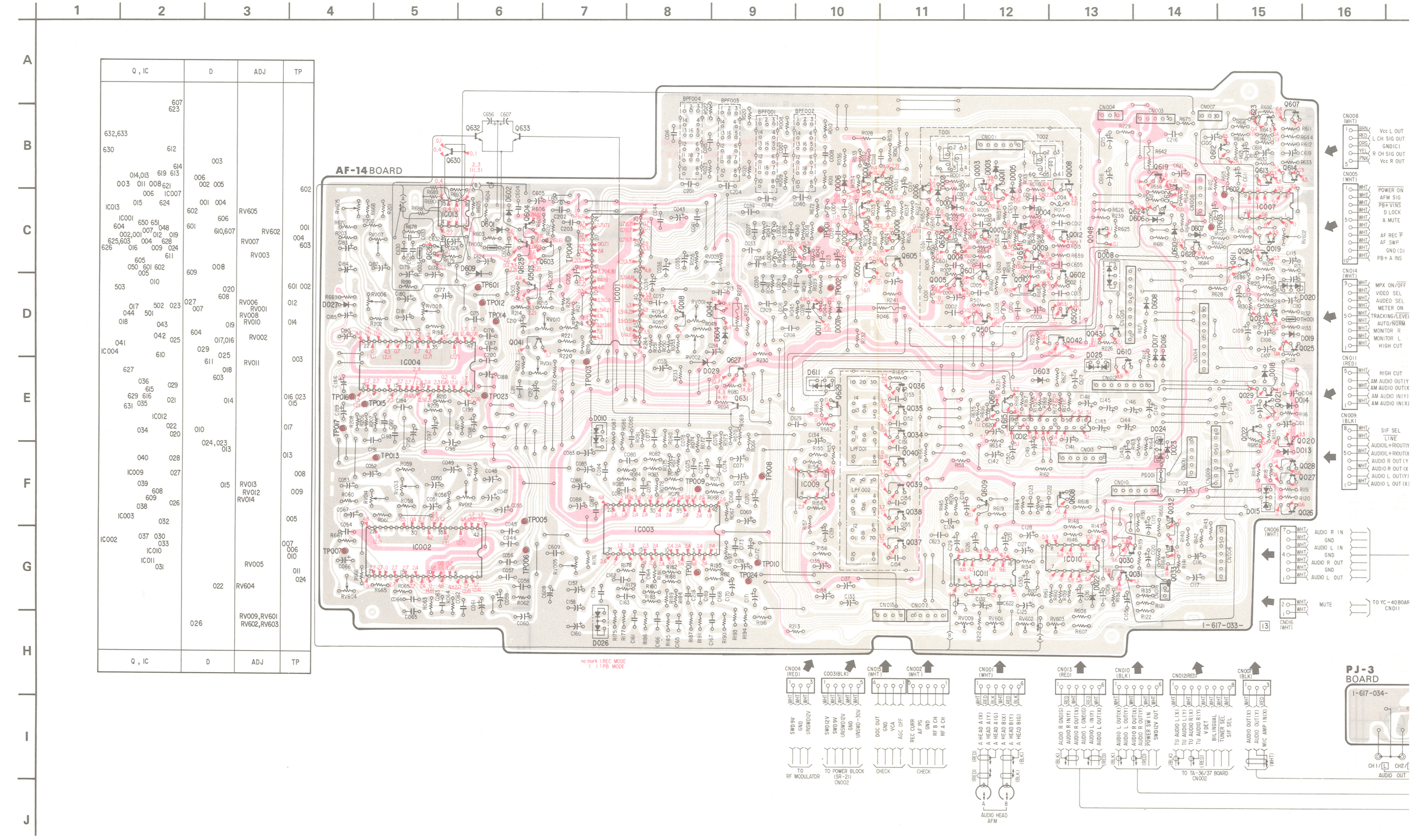

9 10 11 12 13 14 15 16 17 18 19 20 21 22 23 24 2

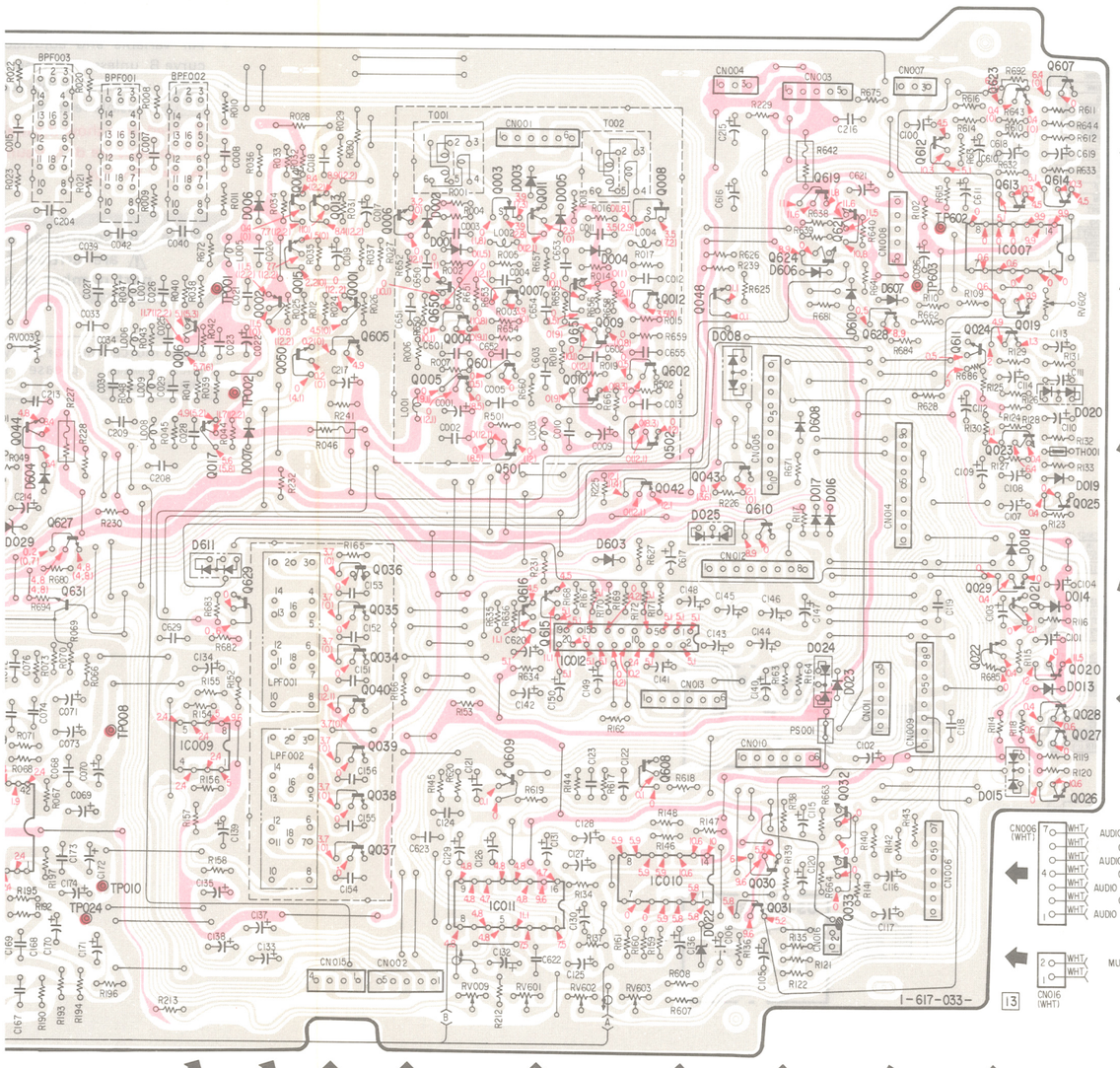

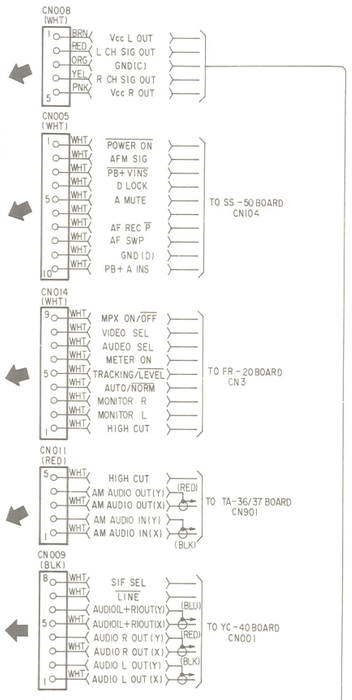

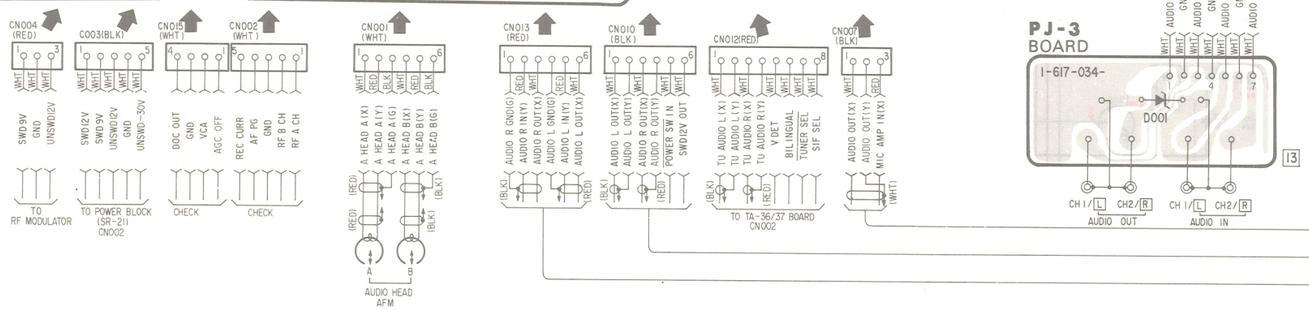

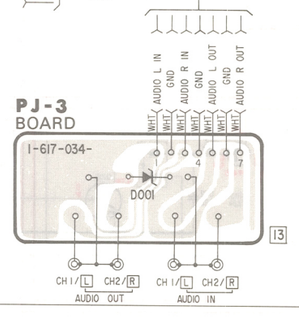

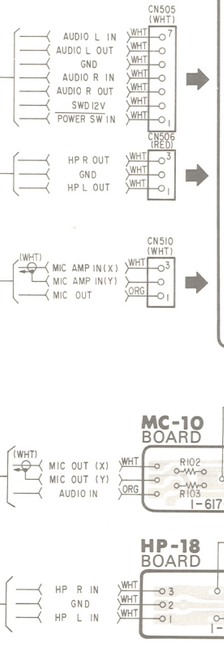

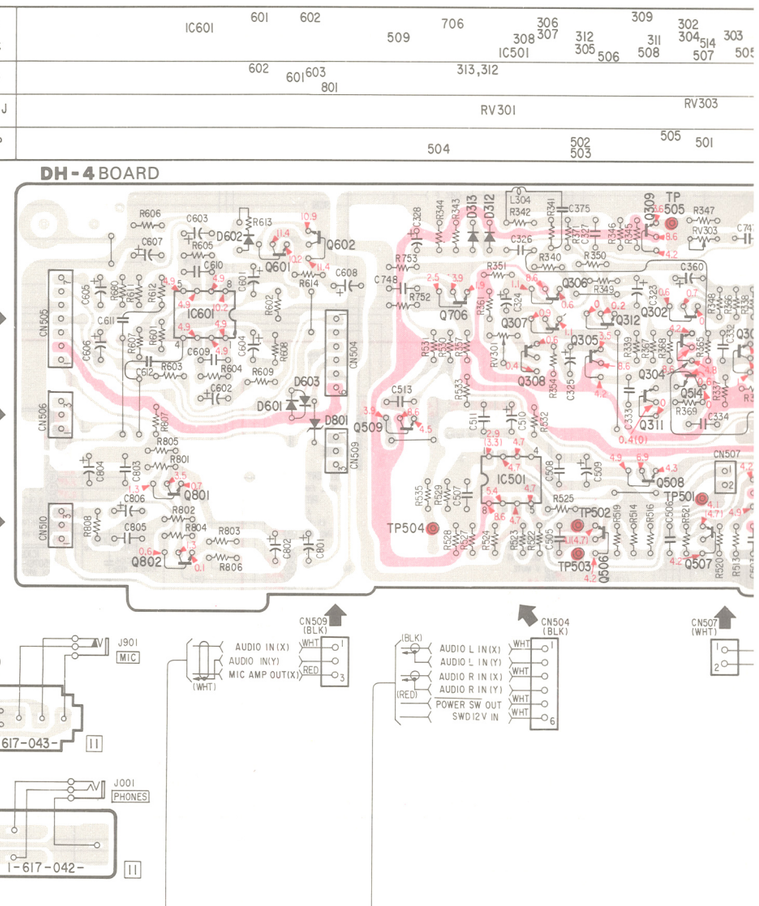

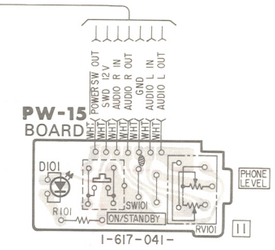

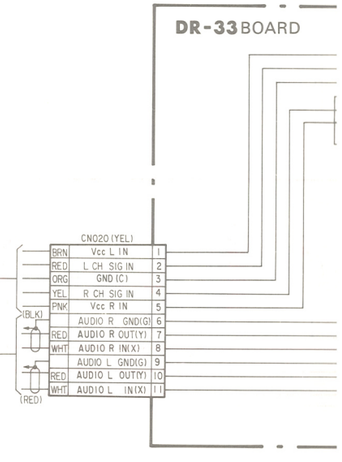

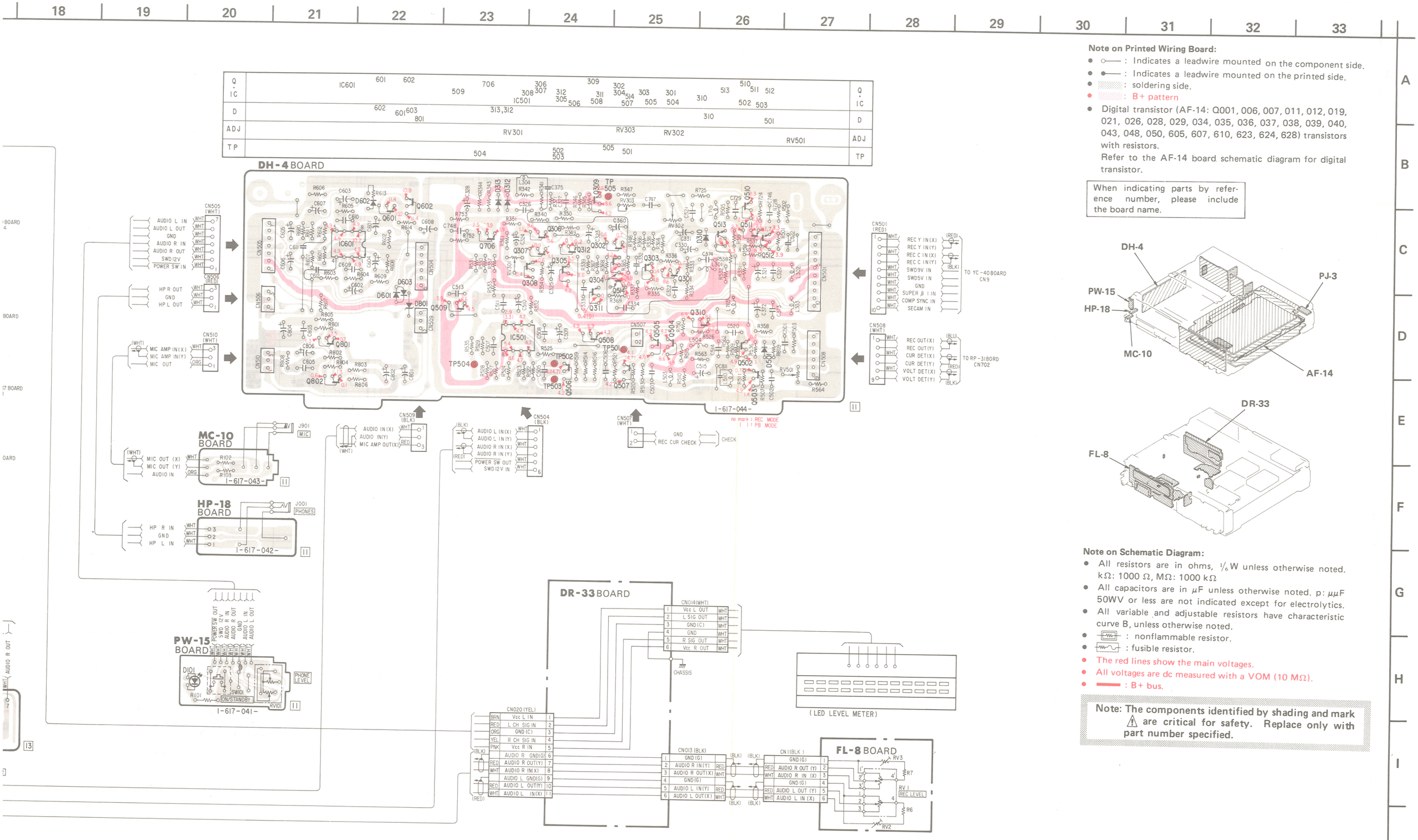

Note on Printed Wiring Board:

- ○—— : Indicates a leadwire mounted on the component side.
- ●—— : Indicates a leadwire mounted on the printed side.
- ▒ : soldering side.
- ▒ : B+ pattern
- Digital transistor (AF-14: Q001, 006, 007, 011, 012, 019, 021, 026, 028, 029, 034, 035, 036, 037, 038, 039, 040, 043, 048, 050, 605, 607, 610, 623, 624, 628) transistors with resistors.
  Refer to the AF-14 board schematic diagram for digital transistor.

When indicating parts by reference number, please include the board name.

Note on Schematic Diagram:

- All resistors are in ohms, 1/6 W unless otherwise noted. kΩ: 1000 Ω, MΩ: 1000 kΩ
- All capacitors are in μF unless otherwise noted. p: μμF 50WV or less are not indicated except for electrolytics.
- All variable and adjustable resistors have characteristic curve B, unless otherwise noted.
- ▭ : nonflammable resistor.
- ⌇ : fusible resistor.
- The red lines show the main voltages.
- All voltages are dc measured with a VOM (10 MΩ).
- ▬ : B+ bus.

Note: The components identified by shading and mark ⚠ are critical for safety. Replace only with part number specified.

AF-14 (AFM SIGNAL PROCESS), PJ-3 (AUDIO IN/OUT JACKS), FL-8 (INDICATOR), DH-4 (A/V HEAD AMP), PW-15 (POWER SWITCH, HEADPHONE LEVEL), DR-33 (SYSTEM CONTROL, SIGNAL TRANSLATION), MC-10 (MICROPHONE JACK), HP-18 (HEADPHC

– Ref. No. AF-14 BOARD: 3,000 series, PJ-3 BOARD: 9,500 series, FL-8 BOARD: 9,600 series, DH-4 BOARD: 7,000 series, PW-15 BOARD: 12,000 series, DR-33 BOARD: 9,300 series, MC-10 BOARD: 13,000 series, HP-18 BOARD: 9,800 series –

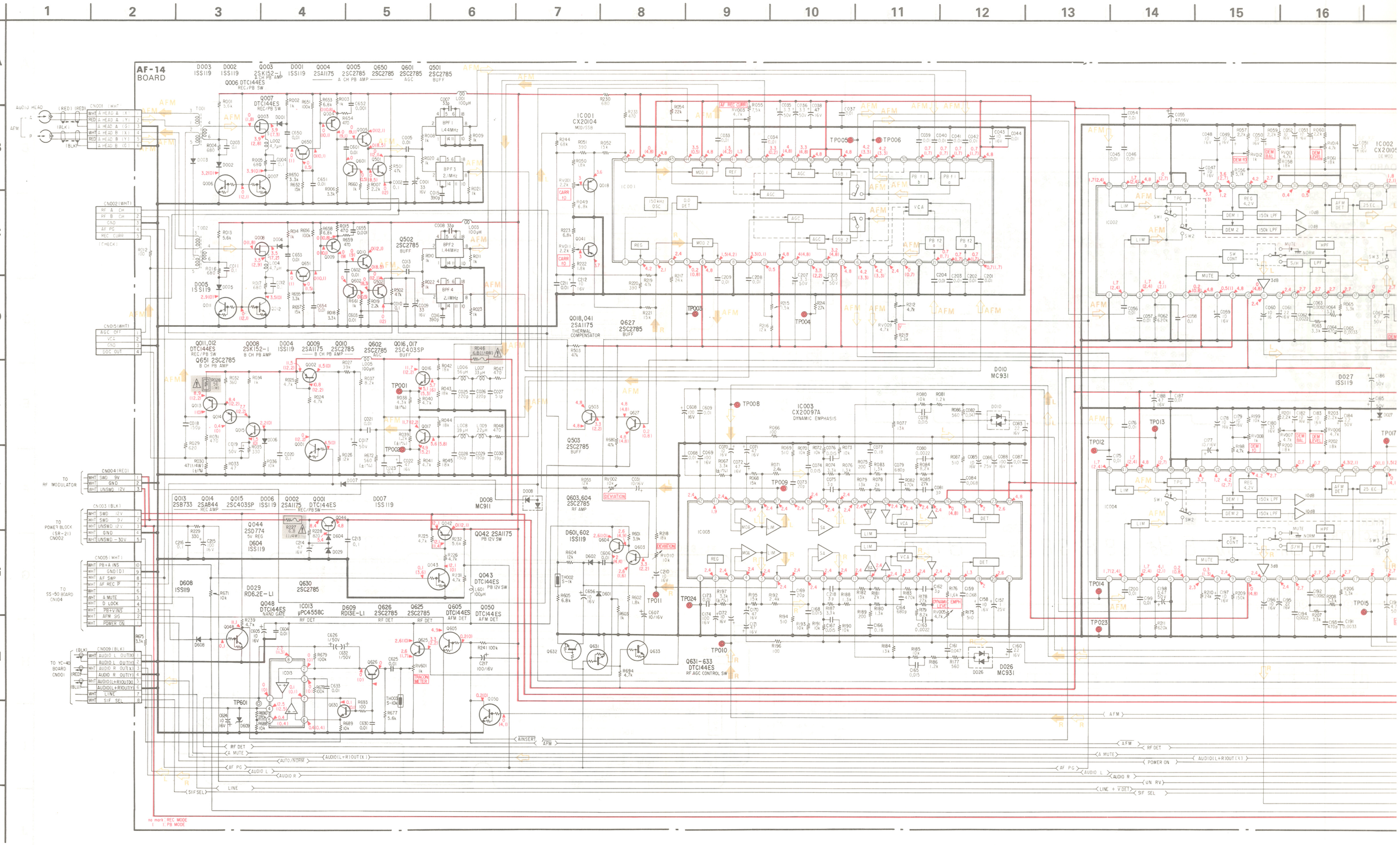

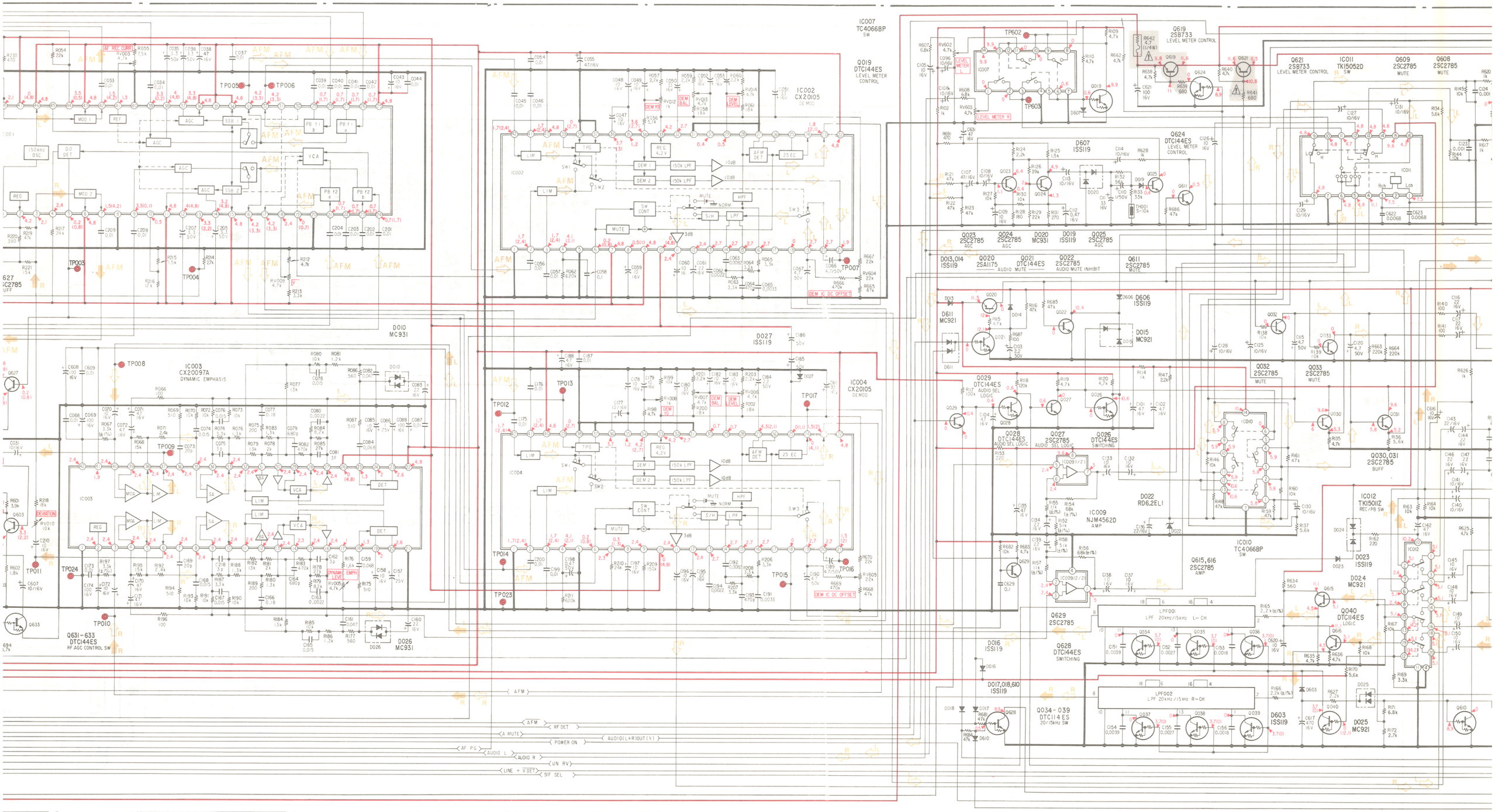
IC007 TC4066BP SW
Q019 DTC144ES LEVEL METER CONTROL
IC002 CX20105 DEMOD
IC004 CX20105 DEMOD
IC003 CX20097A DYNAMIC EMPHASIS
Q631-633 DTC144ES RF AGC CONTROL SW
D010 MC931
D026 MC931
D027 ISS119
TP602
TP603
Q619 2SB733 LEVEL METER CONTROL
Q621 2SB733 LEVEL METER CONTROL
IC011 TK15052D SW
Q609 2SC2785 MUTE
Q608 2SC2785 MUTE
D607 ISS119
Q624 DTC144ES LEVEL METER CONTROL
Q623 2SC2785 AGC
Q624 2SC2785 AGC
D020 MC931
D019 ISS119
Q625 2SC2785 AGC
D013,014 ISS119
Q020 2SA1175 AUDIO MUTE
Q021 DTC144ES AUDIO MUTE
Q022 2SC2785 AUDIO MUTE INHIBIT
Q611 2SC2785 MUTE
D611 MC921
D606 ISS119
D015 MC921
Q032 2SC2785 MUTE
Q033 2SC2785 MUTE
Q030,031 2SC2785 BUFF
Q029 DTC144ES AUDIO SEL LOGIC
Q028 DTC144ES AUDIO SEL LOGIC
Q027 2SC2785 AUDIO SEL LOGIC
Q026 DTC144ES SWITCHING
IC009 NJM4562D AMP
D022 RD6.2ELI
IC012 TK15011Z REC/PB SW
IC010 TC4066BP SW
Q615,616 2SC2785 AMP
D023 ISS119
D024 MC921
Q629 2SC2785
Q628 DTC144ES SWITCHING
Q040 DTC114ES LOGIC
D016 ISS119
D017,018,610 ISS119
Q034-039 DTC114ES 20/15kHz SW
D603 ISS119
D025 MC921
Q610
LPF001 LPF 20kHz/15kHz L-CH
LPF002 LPF 20kHz/15kHz R-CH
AFM
RF DET
Δ MUTE
POWER ON
AUDIO(L+R)OUT(X)
AF P.G
AUDIO L
AUDIO R
UN RV
LINE + V DET
SIF SEL

18 19 20 21 22 23 24 25 26 27 28 29 30 31 32 33

A B C E F G H I J

IC007 TC4066BP SW

Q019 DTC144ES LEVEL METER CONTROL

TP602 TP603 LEVEL METER L LEVEL METER R

RV602 4.7k RV603 4.7k RV604 22k RV605 22k RV606 47k

Q619 2SB733 LEVEL METER CONTROL

Q621 2SB733 LEVEL METER CONTROL

Q624 DTC144ES LEVEL METER CONTROL

D607 ISS119

IC011 TK15052D SW

Q609 2SC2785 MUTE

Q608 2SC2785 MUTE

Q613 2SC2785 BIL/ST SW

Q614 2SC2785 BIL/ST SW

Q623 DTC124ES BIL/ST SW

Q607 2SC2785 BIL/ST SW

Q612 2SC2785 AMP

PS001 (CP-N10)

CN008 (WHT)
1 Vcc L OUT BRN
2 LCH SIG OUT RED
3 GND(C) ORG
4 RCH SIG OUT YEL
5 Vcc R OUT PNK

CN010 (BLK) (BLK) (RED)
1 AUDIO L OUT(X) WHT
2 AUDIO L OUT(Y) WHT
3 AUDIO R OUT(X) WHT
4 AUDIO R OUT(Y) WHT
5 POWER SW IN WHT
6 SWD 12V OUT WHT

CN007 (BLK) (WHT)
1 AUDIO OUT (X) WHT
2 AUDIO OUT(Y) WHT
3 MIC AMP IN (X) RED

CN016 (WHT)
1 WHT
2 MUTE WHT

Q023 2SC2785 AGC
Q024 2SC2785 AGC
D020 MC931
D019 ISS119
Q025 2SC2785 AGC
D013,014 ISS119
Q020 2SA1175
Q021 DTC144ES AUDIO MUTE
Q022 2SC2785 AUDIO MUTE INHIBIT
Q611 2SC2785 MUTE
D611 MC921
D606 ISS119
D615 MC921

Q029 DTC144ES AUDIO SEL LOGIC
Q028 DTC144ES AUDIO SEL LOGIC
Q027 2SC2785 AUDIO SEL LOGIC
Q026 DTC144ES SWITCHING

IC009 (1/2) IC009 (2/2) NJM4562D AMP

D022 RD6.2ELI

IC010 TC4066BP SW

IC012 TK15011Z REC/PB SW

Q615,616 2SC2785 AMP

D023 ISS119

D024 MC921

Q629 2SC2785

Q628 DTC144ES SWITCHING

Q615

Q040 DTC114ES LOGIC

Q616

D016 ISS119

D017,018,610 ISS119

Q034-039 DTC114ES 20/15kHz SW

LPF001 LPF 20kHz/15kHz L-CH

LPF002 LPF 20kHz/15kHz R-CH

Q032 2SC2785 MUTE

Q033 2SC2785 MUTE

Q030,031 2SC2785 BUFF

D603 ISS119

D025 MC921

Q610 DTC144ES INV

CN006 (WHT)
1 AUDIO L OUT WHT
2 GND WHT
3 AUDIO R OUT WHT
4 GND WHT
5 AUDIO L IN WHT
6 GND WHT
7 AUDIO R IN WHT

PJ-3 BOARD
CH-1 (L) CH-2 (R) AUDIO OUT
CH-1 (L) CH-2 (R) AUDIO IN

CN011 (RED)
1 AM AUDIO IN(X) (BLK)
2 AM AUDIO IN(Y)
3 AM AUDIO OUT(X) WHT (RED)
4 AM AUDIO OUT(Y)
5 HIGH CUT WHT
TO TA-36/37 BOARD CN901

CN012 (RED)
1 TU AUDIO L(X) WHT (BLK)
2 TU AUDIO L(Y)
3 TU AUDIO R(X) WHT (RED)
4 TU AUDIO R(Y)
5 V DET WHT
6 BILINGUAL WHT
7 TUNER SEL WHT
8 SIF SEL WHT
TO TA-36/37 BOARD CN902

CN013 (RED)
6 AUDIO L OUT(X) WHT (RED)
5 AUDIO L IN(Y) RED
4 AUDIO L GND(G)
3 AUDIO R OUT(X) WHT
2 AUDIO R IN(Y) RED
1 AUDIO R GND(G) (BLK)

CN014 (WHT)
1 HIGH CUT WHT
2 MONITOR L WHT
3 MONITOR R WHT
4 AUTO7 NORM WHT
5 TRACKING/LEVEL WHT
6 METER ON WHT
7 AUDIO SEL WHT
8 VIDEO SEL WHT
9 MPX ON/OFF WHT
TO FR-20 BOARD CN3

DH-4 BOARD (1/2)

Q801 2SC2785 MIC AMP
Q802 2SC2785 MIC AMP
Q602 2SC2785 LIPPLE FILTER
Q601 2SC2785 LIPPLE FILTER
IC601 NJM4556D HEADPHONE AMP
D601-603 ISS133
D801 RD6.8E-B

CN509 (BLK) (WHT)
AUDIO IN(X)
AUDIO IN(Y)
MIC AMP OUT(X)

CN504 (BLK) (BLK)
AUDIO L IN(X)
AUDIO L IN(Y)
AUDIO R IN(X)
AUDIO R IN(Y)
POWER SW OUT
SWD 12V IN

CN505 (WHT)
POWER SW IN
SWD 12V
AUDIO R OUT
AUDIO R IN
GND
AUDIO L OUT
AUDIO L IN

TO YC-40 BOARD CN01

CN510 (WHT)
1 MIC OUT ORG
2 MIC AMP IN(Y) ORG
3 MIC AMP IN(X) WHT (WHT)
MIC AMP OUT(Y) WHT
MIC AMP OUT(X)

MC-10 BOARD J901 (MIC)

CN506 (RED)
1 HP L OUT WHT
2 GND WHT
3 HP R OUT WHT
HP L IN WHT
GND WHT
HP R IN WHT

HP-18 BOARD J001 (PHONES)

no mark: REC MODE
( ): PB MODE

PW-15 BOARD

CN502 (WHT)
POWER SW OUT
SWD 12V
AUDIO R IN
AUDIO R OUT
GND
AUDIO L IN
AUDIO L OUT

ON/STANDBY SW101
RV101 50k/50k PHONE LEVEL
D101 TLG123A
R101 470 (1/4W)

- Signal path
  - REC AUDIO SIGNAL
  - PB AUDIO SIGNAL

DR-33 BOARD (1/2)

CN020 (YEL)
BRN Vcc L IN
RED L CH SIG IN
ORG GND (C)
YEL R CH SIG IN
PNK Vcc R IN
AUDIO R GND(G) (BLK)
RED AUDIO R OUT(Y)
WHT AUDIO R IN(X)
AUDIO L GND(G)
RED AUDIO L OUT(Y) (RED)
WHT AUDIO L IN(X)

CN013 (BLK)
CN014 (WHT)
Vcc L OUT
L SIG OUT
GND (C)
GND
R SIG OUT
Vcc R OUT

C013 0.01
C014 0.01
CHASSIS

(LED LEVEL METER)

FL-8 BOARD (1/2)

RV2 10k REC VR L
RV1 20k/20k REC LEVEL
RV3 10k REC VR R

CN1 (BLK)
AUDIO L IN(X)
AUDIO L OUT(Y)
GND(G)
AUDIO R IN(X)
AUDIO R OUT(Y)
GND (G)

CN013 (BLK)
AUDIO L OUT(X)
AUDIO L IN(Y)
GND (G)
AUDIO R OUT(X)
AUDIO R IN(Y)
GND (G)

FR-20 BOARD

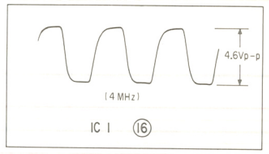

FL-9 BOARD

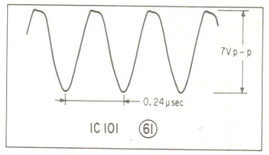

1-7. FL-8 (INDICATOR), FL-9 (TIMER CONTROL), FR-20 (FUNCTION SWITCH) PRINTED WIRIN

– Ref. No. FL-8 BOARD: 9,600 series, FL-9 BOARD: 9,700 series, FR-20 BOARD: 9,800 series –

- ○— : Indicates a leadwire mounted on the component side.
- —● : Indicates a leadwire mounted on the printed side.
- ⊗ : through hole
- : soldering side.
- : B+ pattern
- : B– pattern
- : component side.
- Digital transistor (FR-20: Q104. FL-9: Q102, 103) transistors with resistors.
  Refer to the FR-20 and FL-9 boards schematic diagrams.

When indicating parts by reference number, please include the board name.

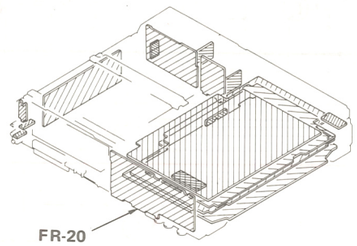

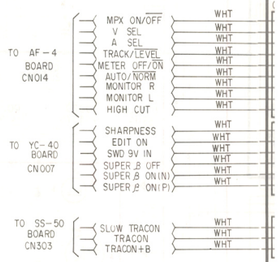

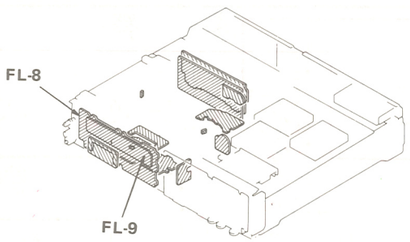

1-7. FL-8 (INDICATOR), FL-9 (TIMER CONTROL), FR-20 (FUNCTION SWITCH) PRINTED WIRING BOARDS

– Ref. No. FL-8 BOARD: 9,600 series, FL-9 BOARD: 9,700 series, FR-20 BOARD: 9,800 series –

FR-20 BOARD

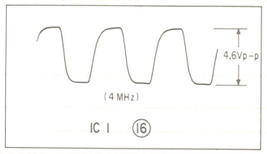

FL-9 BOARD

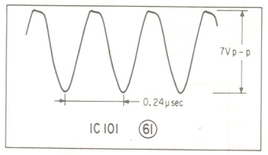

- ○—— : Indicates a leadwire mounted on the component side.
- ●—— : Indicates a leadwire mounted on the printed side.
- ⊗ : through hole
- ▒▒ : soldering side.
- ▒▒ : B+ pattern
- ▒▒ : B– pattern
- ▒▒ : component side.
- Digital transistor (FR-20: Q104. FL-9: Q102, 103) transistors with resistors.
  Refer to the FR-20 and FL-9 boards schematic diagrams.

When indicating parts by reference number, please include the board name.

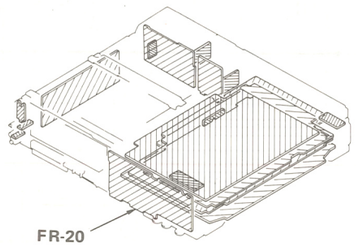

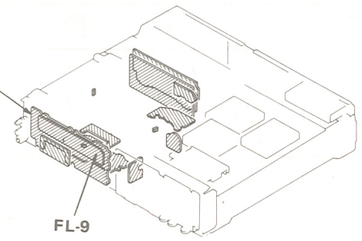

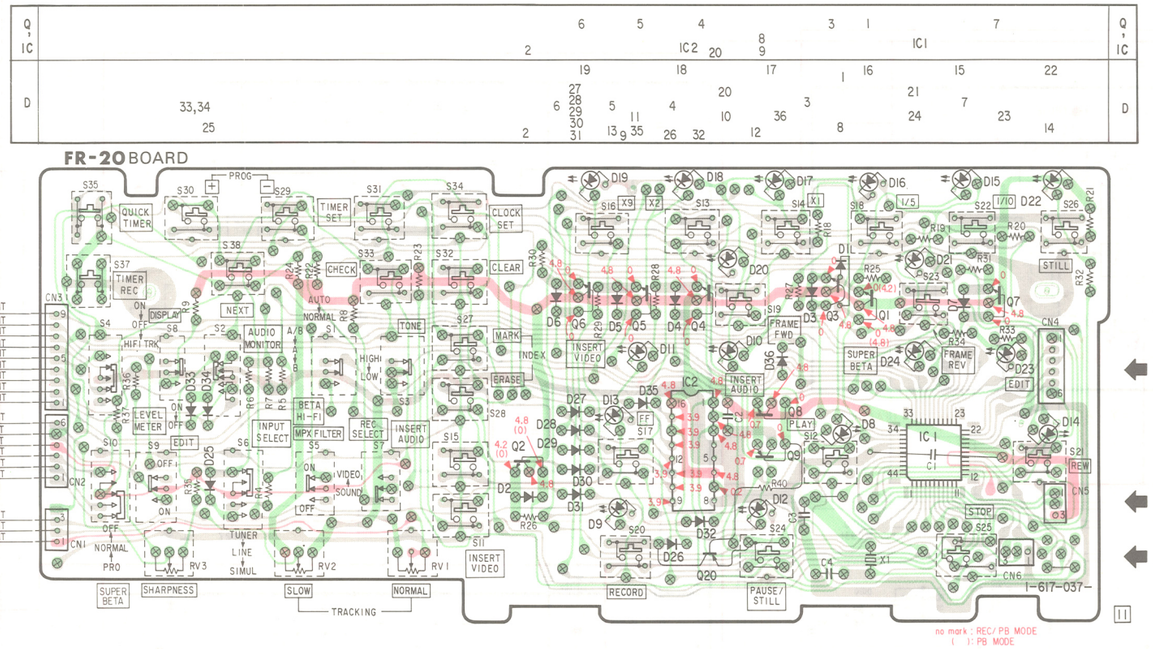

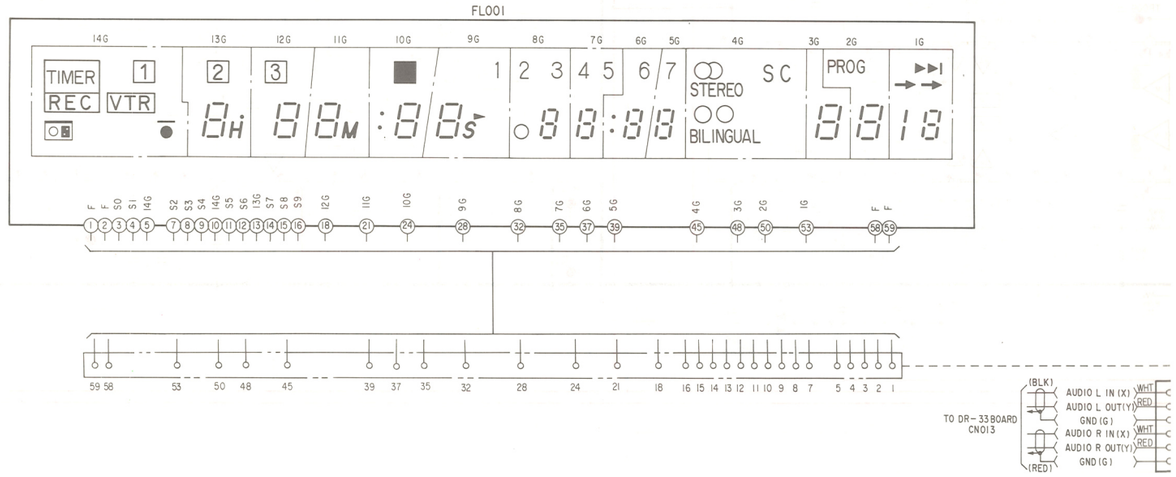

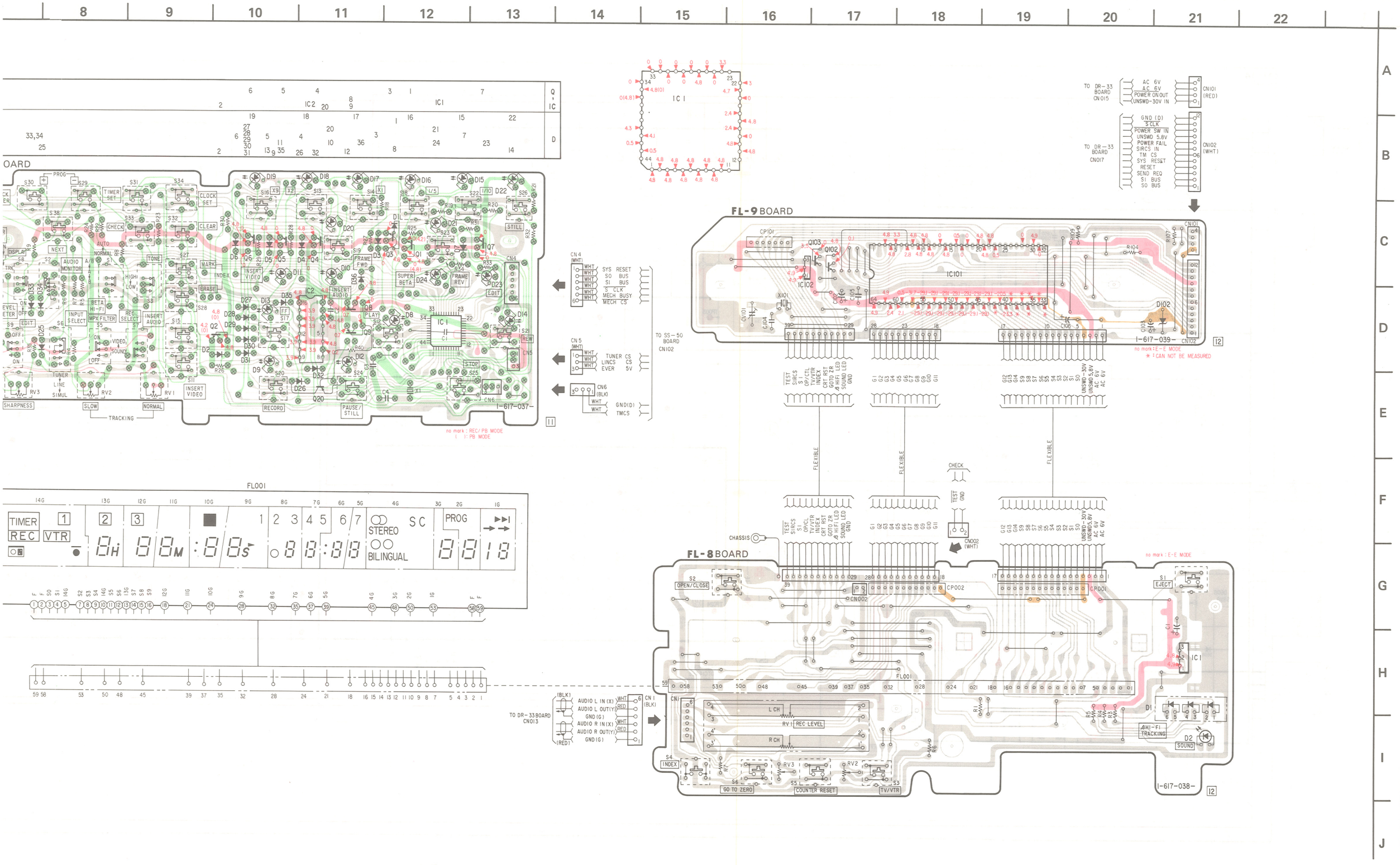
FL-9 BOARD
FL-8 BOARD
FL001
TO SS-50 BOARD CN102
TO DR-33 BOARD CN015
TO DR-33 BOARD CN017
TO DR-33 BOARD CN013
CN4 (WHT)
CN5 (WHT)
CN6 (BLK)
CN1 (BLK)
CN101 (RED)
CN102 (WHT)
CN002 (WHT)
CHASSIS
CHECK
TEST GND
FLEXIBLE
TIMER
REC
VTR
STEREO
BILINGUAL
PROG
SC
SHARPNESS
SLOW
NORMAL
TRACKING
RECORD
PAUSE/STILL
INSERT VIDEO
INSERT AUDIO
SUPER BETA
FRAME FWD
FRAME REV
EDIT
STILL
REW
STOP
PLAY
CLOCK SET
TIMER SET
CLEAR
CHECK
NEXT
AUDIO MONITOR
TONE
MARK
ERASE
INPUT SELECT
REC SELECT
MPX FILTER
BETA HI-FI
INDEX
SYS RESET
SO BUS
SI BUS
S CLK
MECH BUSY
MECH CS
TUNER CS
LINCS CS
EVER 5V
GND(D)
TMCS
AUDIO L IN (X)
AUDIO L OUT(Y)
GND (G)
AUDIO R IN (X)
AUDIO R OUT(Y)
GND (G)
L CH
R CH
REC LEVEL
INDEX
GO TO ZERO
COUNTER RESET
TV/VTR
OPEN/CLOSE
EJECT
SOUND
HI-FI TRACKING
1-617-037-
1-617-039-
1-617-038-
no mark : REC/PB MODE
( ) : PB MODE
no mark : E-E MODE
* : CAN NOT BE MEASURED

FL-8 (INDICATOR), FL-9 (TIMER CONTROL), FR-20 (FUNCTION SWITCH) SCHEMATIC DIAGRAMS

– Ref. No. FL-8 BOARD: 9,600 series, FL-9 BOARD: 9,700 series, FR-20 BOARD: 9,800 series –

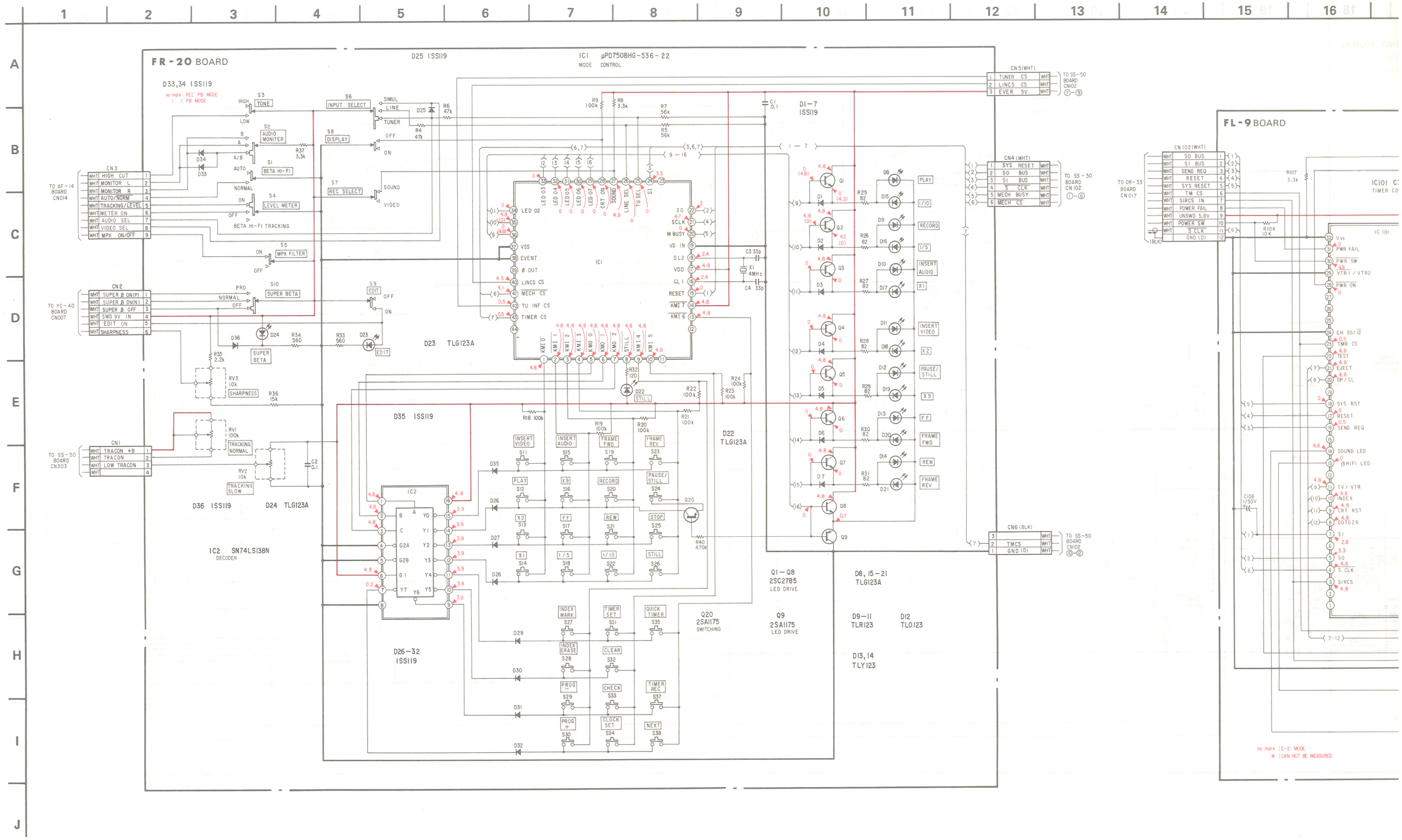

TIMER TIMER

9 10 11 12 13 14 15 16 17 18 19 20 21 22 23 24

22

CN5(WHT)

1	TUNER CS	WHT	TO SS-50 BOARD CN102 ⑦-⑨
2	LINCS CS	WHT	
3	EVER 5V	WHT	

CN4 (WHT)

1	SYS RESET	WHT	TO SS-50 BOARD CN102 ①-⑥
2	SO BUS	WHT	
3	SI BUS	WHT	
4	S CLK	WHT	
5	MECH BUSY	WHT	
6	MECH CS	WHT	

CN6 (BLK)

3		WHT	TO SS-50 BOARD CN102 ⑩-⑫
2	TMCS	WHT	
1	GND (D)	WHT	

R7 56k
R5 56k
C1 0.1
D1-7 1SS119
C3 33p
X1 4MHz
C4 33p
R22 100k
R23 100k
R24 100k
R21 100k
D22 TLG123A
Q20
R40 470k

Q1-Q8 2SC2785 LED DRIVE

D8, 15-21 TLG123A

D9-11 TLR123

D12 TL0123

D13, 14 TLY123

Q20 2SA1175 SWITCHING

Q9 2SA1175 LED DRIVE

R25 82 R26 82 R27 82 R28 82 R29 82 R30 82 R31 82

PLAY
I/IO
RECORD
I/5
INSERT AUDIO
X1
INSERT VIDEO
X2
PAUSE/ STILL
X9
FF
FRAME FWD
REW
FRAME REV

FL-9 BOARD

CN102(WHT)

WHT	SO BUS	1	TO DR-33 BOARD CN017
WHT	SI BUS	2	
WHT	SEND REQ	3	
WHT	RESET	4	
WHT	SYS RESET	5	
WHT	TM CS	6	
WHT	SIRCS IN	7	
WHT	POWER FAIL	8	
WHT	UNSWD 5.8V	9	
WHT	POWER SW	10	
WHT	S CLK	11	
(BLK)	GND (D)	12	

R107 3.3k
R104 10K
C106 1/50V

IC101 CXP5016-104S TIMER CONTROL

IC 101 pin functions: Vss, PWR FAIL, PWR SW, VTR1 / VTR2, PWR ON, CH 30/12, TMR CS, TEST, EJECT, OP/CL, SYS RST, RESET, SEND REQ, SOUND LED, βHiFi LED, TV/VTR, INDEX, CRT RST, GOTOZR, SI, SO, S CLK, SIRCS, VDD, TMCS, X'TAL, EX'TAL, RST, VDD, S0-S9, G14-G1, -30 V

D102 RD9.1E-B

CN101(RED)

1	UNSWD -30V IN	WHT	TO DR-33 BOARD CN015
2	POWER ON OUT	WHT	
3	AC 6V	WHT	
4	AC 6V	WHT	

C103 10/16V

FLEXIBLE

1	AC 6V	1	FLEXIBLE
2	AC 6V	2	
3	UNSWD 5.8V	3	
4	UNSWD -30V	4	
5	S0	5	
6	S1	6	
7	S2	7	
8	S3	8	
9	S4	9	
10	S5	10	
11	S6	11	
12	S7	12	
13	S8	13	
14	S9	14	
15	G14	15	
16	G13	16	
17	G12	17	

18	G11	18	FLEXIBLE
19	G10	19	
20	G9	20	
21	G8	21	
22	G7	22	
23	G6	23	
24	G5	24	
25	G4	25	
26	G3	26	
27	G2	27	
28	G1	28	

39	TEST	39	FLEXIBLE
38	SIRCS	38	
37	SI	37	
36	OP/CL	36	
35	TV/VTR	35	
34	INDEX	34	
33	CRT RST	33	
32	GO TO ZR	32	
31	βHiFi LED	31	
30	SOUND LED	30	
29	GND	29	

IC102 S8054ALB INITIAL RESET

X101 4.194304MHz
CLOCK
CV101 20P
C104 10P
C102 10 16V
C105 0.1
IC102
CP101 100k x6
R109 10K

Q103 DTC114ES LED DRIVE

Q102 DTC114ES LED DRIVE

no mark :E-E MODE
* :CAN NOT BE MEASURED

FL-8 BOARD (1/2)

no mark : E-E MODEL

14G
TIMER 1
REC VTR

F E S0 S1 14G S2 S3 S4 S5

AC 6V	1		
AC 6V	2		
UNSWD 5.8V	3		
UNSWD -30V	4		
S0	5		
S1	6		
S2	7		
S3	8		
S4	9		
S5	10		
S6	11		
S7	12		
S8	13		
S9	14		
G14	15		
G13	16		
G12	17		

G11	18		
G10	19		
G9	20		
G8	21		
G7	22		
G6	23		
G5	24		
G4	25		
G3	26		
G2	27		
G1	28		

CP002 100k

CN002(WHT)

GND	2		
TEST	1		

C1 10 16V

IC1

TEST	39		
SIRCS	38		
SI	37		
OP/CL	36		
TV/VTR	35		
INDEX	34		
CRT RST	33		
GO TO ZR	32		
βHiFi LED	31		
SOUND LED	30		
GND	29		

R1 47k

S6 GO TO ZERO S5 COUNT RESE

IC1 BX1317 REMOTE CONTROL RECEIVER

18 19 20 21 22 23 24 25 26 27 28 29 30 31 32 33

A B C D E F G H I J

- All resistors are in ohms, 1/6 W unless otherwise noted. kΩ: 1000 Ω, MΩ: 1000 kΩ
- All capacitors are in μF unless otherwise noted. p: μμF 50WV or less are not indicated except for electrolytics.
- All variable and adjustable resistors have characteristic curve B, unless otherwise noted.
- : nonflammable resistor.
- : fusible resistor.
- The red lines show the main voltages.
- All voltages are dc measured with a VOM (10 MΩ).
- : B+ bus.
- : B− bus.

Note: The components identified by shading and mark ⚠ are critical for safety. Replace only with part number specified.

When indicating parts by reference number, please include the board name.

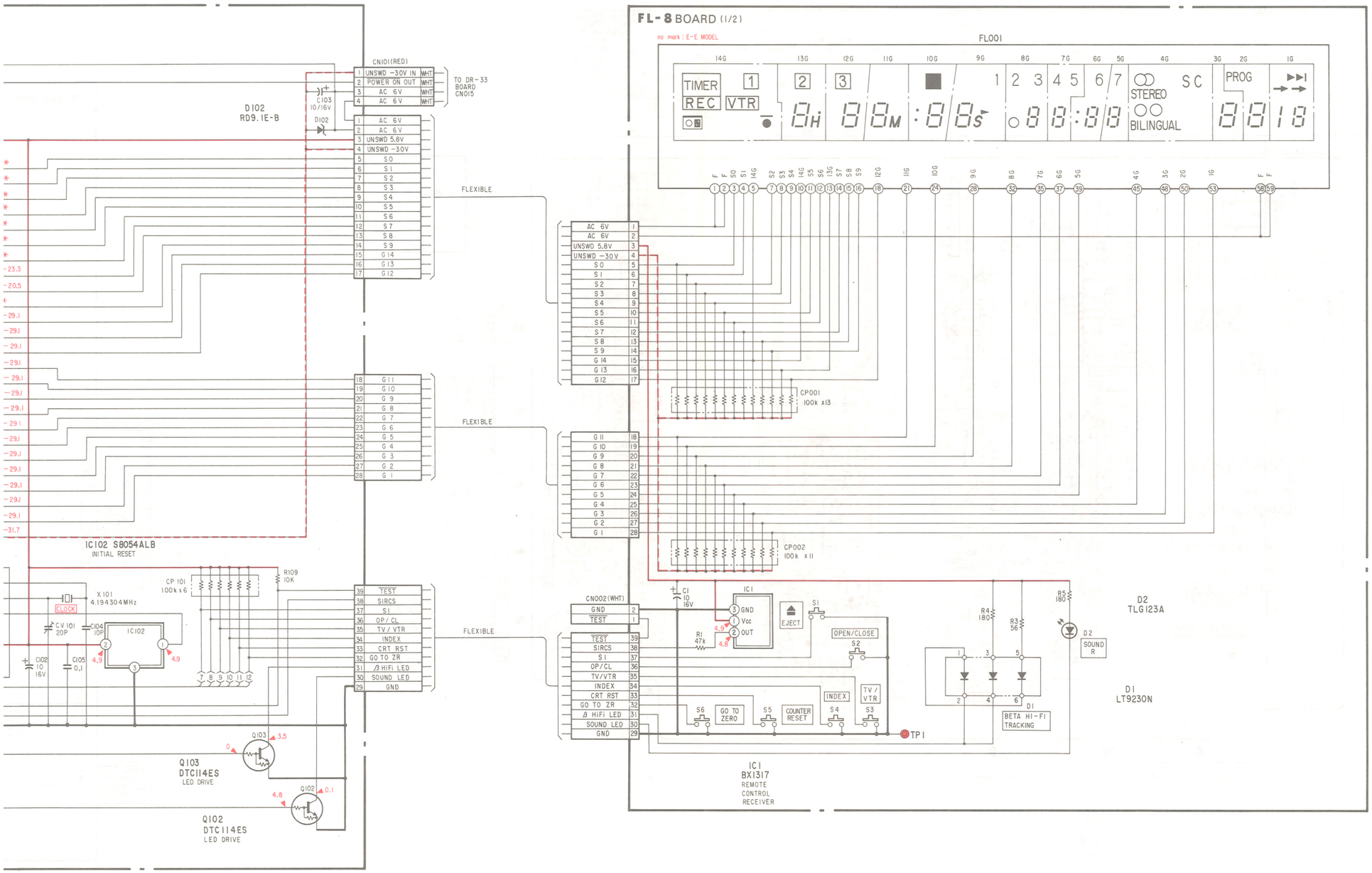

1-8. TA-36 (TUNER, AUDIO) PRINTED WIRING BOARD AND SCHEMATIC DIAGRAM

– Ref. No. TA-36 BOARD: 4,000 series –

Note on Printed Wiring Board:

- ○—— : Indicates a leadwire mounted on the component side.
- ●—— : Indicates a leadwire mounted on the printed side.
- ▒▒▒ : soldering side.
- ▒▒▒ : B+ pattern
- ▒▒▒ : B– pattern
- Digital transistor (TA-36: Q003, 004, 006, 013, 014, 015, 301, 508, 601, 604, 605, 610, 703, 800, 802, 901) transistors with resistors.
  Refer to the TA-36 borad schematic diagram for digital transistor.

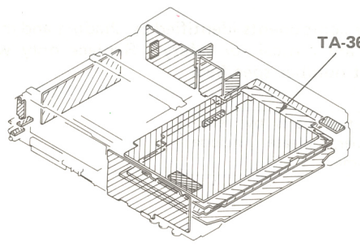

Note on Schematic Diagram:

- All resistors are in ohms, 1/6W unless otherwise noted. kΩ: 1000 Ω, MΩ: 1000 kΩ
- All capacitors are in μF unless otherwise noted. p: μμF 50WV or less are not indicated except for electrolytics.
- All variable and adjustable resistors have characteristic curve B, unless otherwise noted.
- ▭FW▭ : nonflammable resistor.
- ▭≈▭ : fusible resistor.
- The red lines show the main voltages.
- All voltages are dc measured with a VOM (10 MΩ).
- ▬▬ : B+ bus.
- ▬ ▬ ▬ : B– bus.

Note: The components identified by shading and mark ⚠ are critical for safety. Replace only with part number specified.

When indicating parts by reference number, please include the board name.

TA-36 BOARD

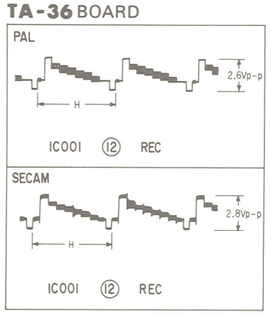

<ES Model>

- Signal path
  - : REC Y 8
  - : REC AUI
  - : PB AUDI

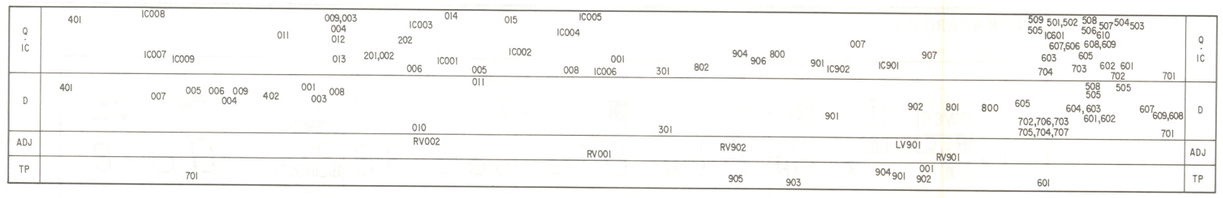

TA-36 BOARD

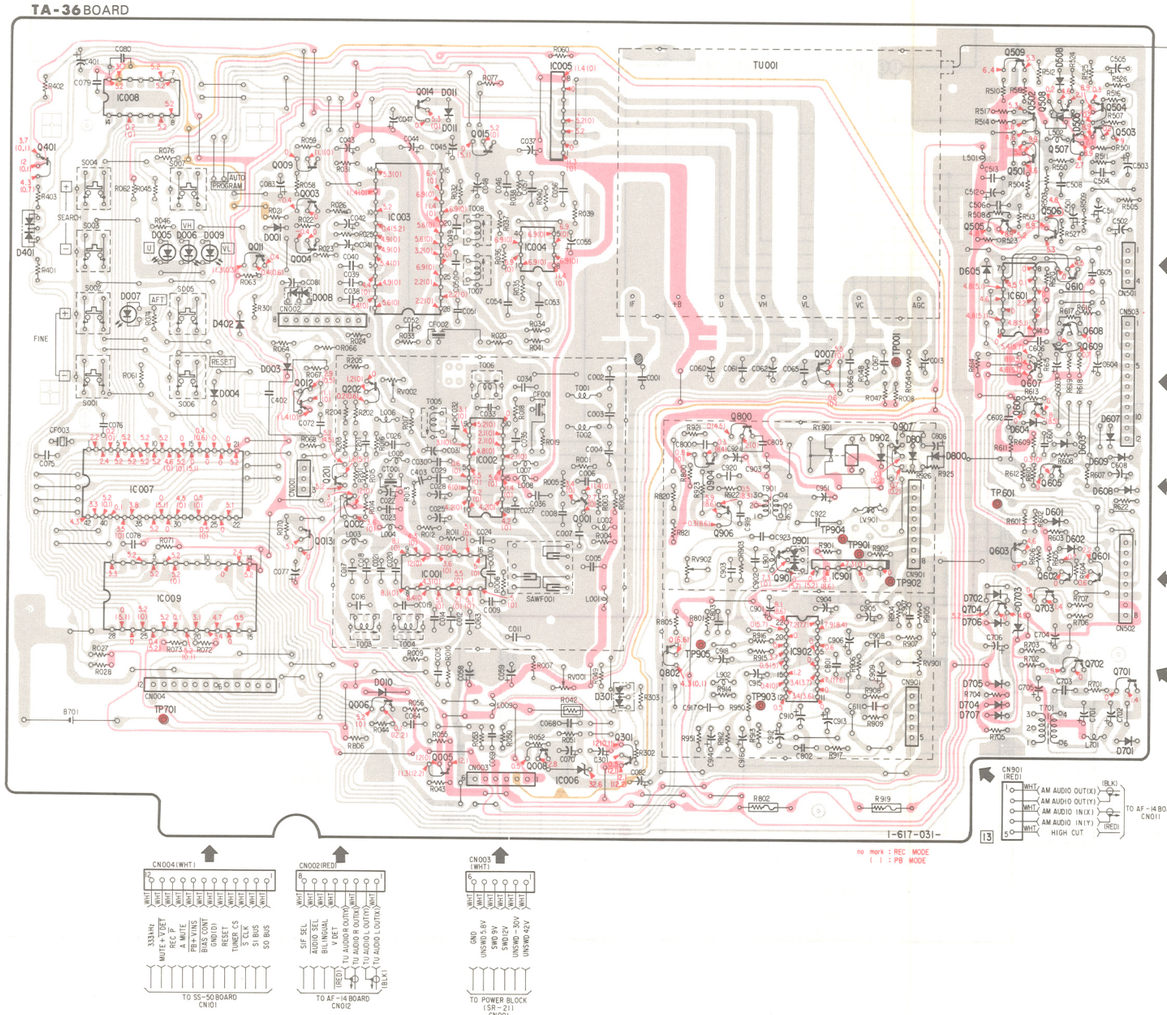

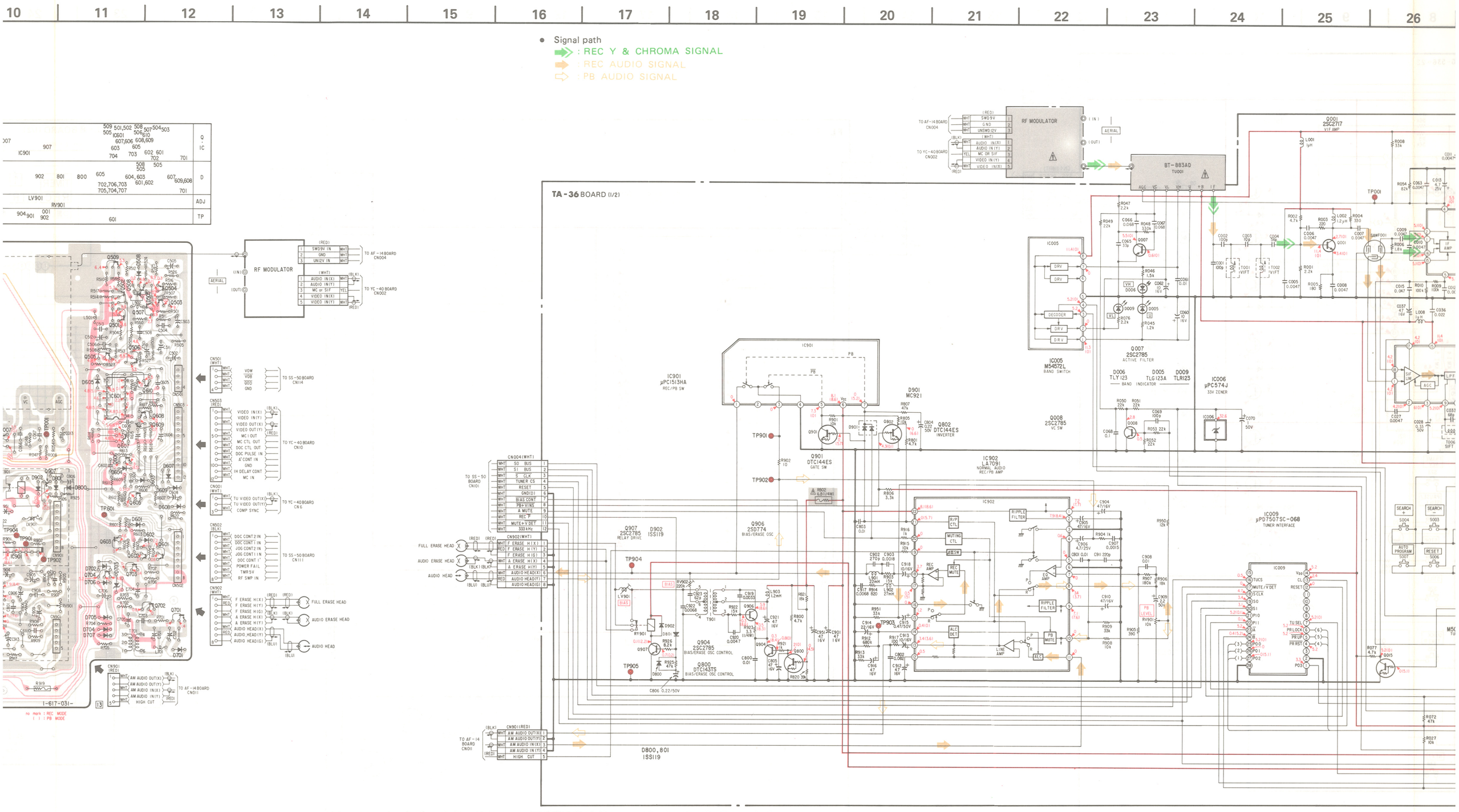
10 11 12 13 14 15 16 17 18 19 20 21 22 23 24 25 26
Signal path
: REC Y & CHROMA SIGNAL
: REC AUDIO SIGNAL
: PB AUDIO SIGNAL
TA-36 BOARD (1/2)
RF MODULATOR
BT-883AD
TU001
Q001
2SC2717
VIF AMP
IC005
M54572L
BAND SWITCH
Q007
2SC2785
ACTIVE FILTER
D006
TLY123
D005
TLG123A
D009
TLR123
BAND INDICATOR
IC006
μPC574J
33V ZENER
Q008
2SC2785
VC SW
IC901
μPC1513HA
REC/PB SW
D901
MC921
Q802
DTC144ES
INVERTER
Q901
DTC144ES
GATE SW
IC902
LA7091
NORMAL AUDIO
REC/PB AMP
IC009
μPD7507SC-068
TUNER INTERFACE
Q907
2SC2785
RELAY DRIVE
D902
1SS119
Q906
2SD774
BIAS/ERASE OSC
Q904
2SC2785
BIAS/ERASE OSC CONTROL
Q800
DTC143TS
BIAS/ERASE OSC CONTROL
D800, 801
1SS119
FULL ERASE HEAD
AUDIO ERASE HEAD
AUDIO HEAD
TO AF-14 BOARD CN004
TO YC-40 BOARD CN002
TO SS-50 BOARD CN114
TO YC-40 BOARD CN10
TO YC-40 BOARD CN6
TO SS-50 BOARD CN111
TO AF-14 BOARD CN011
TO SS-50 BOARD CN101
TO AF-14 BOARD CN011
1-617-031-
no mark : REC MODE
( ) : PB MODE

18 19 20 21 22 23 24 25 26 27 28 29 30 31 32 33

A B C D E F G H I J

)MA SIGNAL
SNAL
IAL

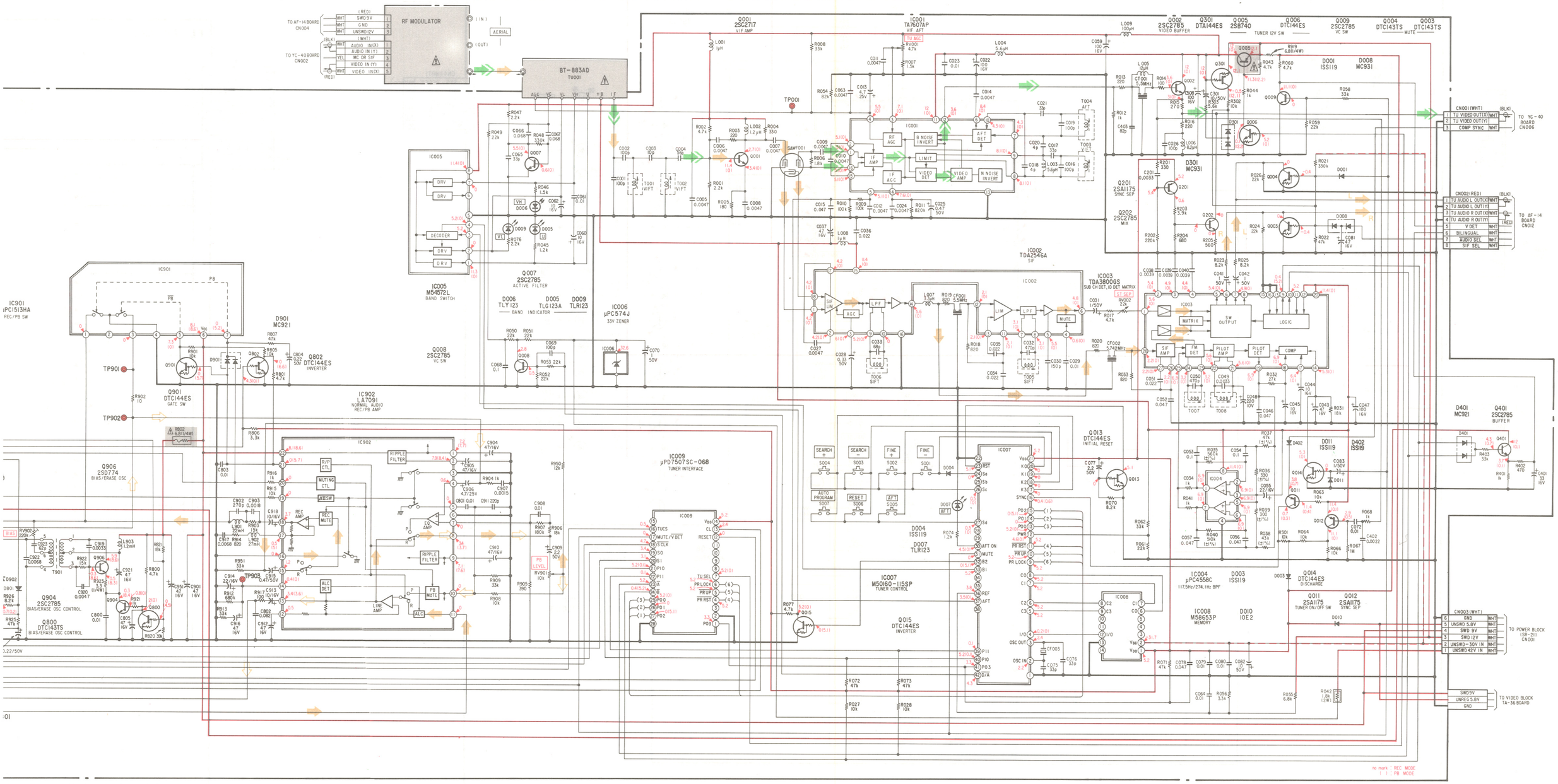

1-9. TA-37 (TUNER, AUDIO) PRINTED WIRING BOARD AND SCHEMATIC DIAGRAM

– Ref. No. TA-37 BOARD: 5,000 series –

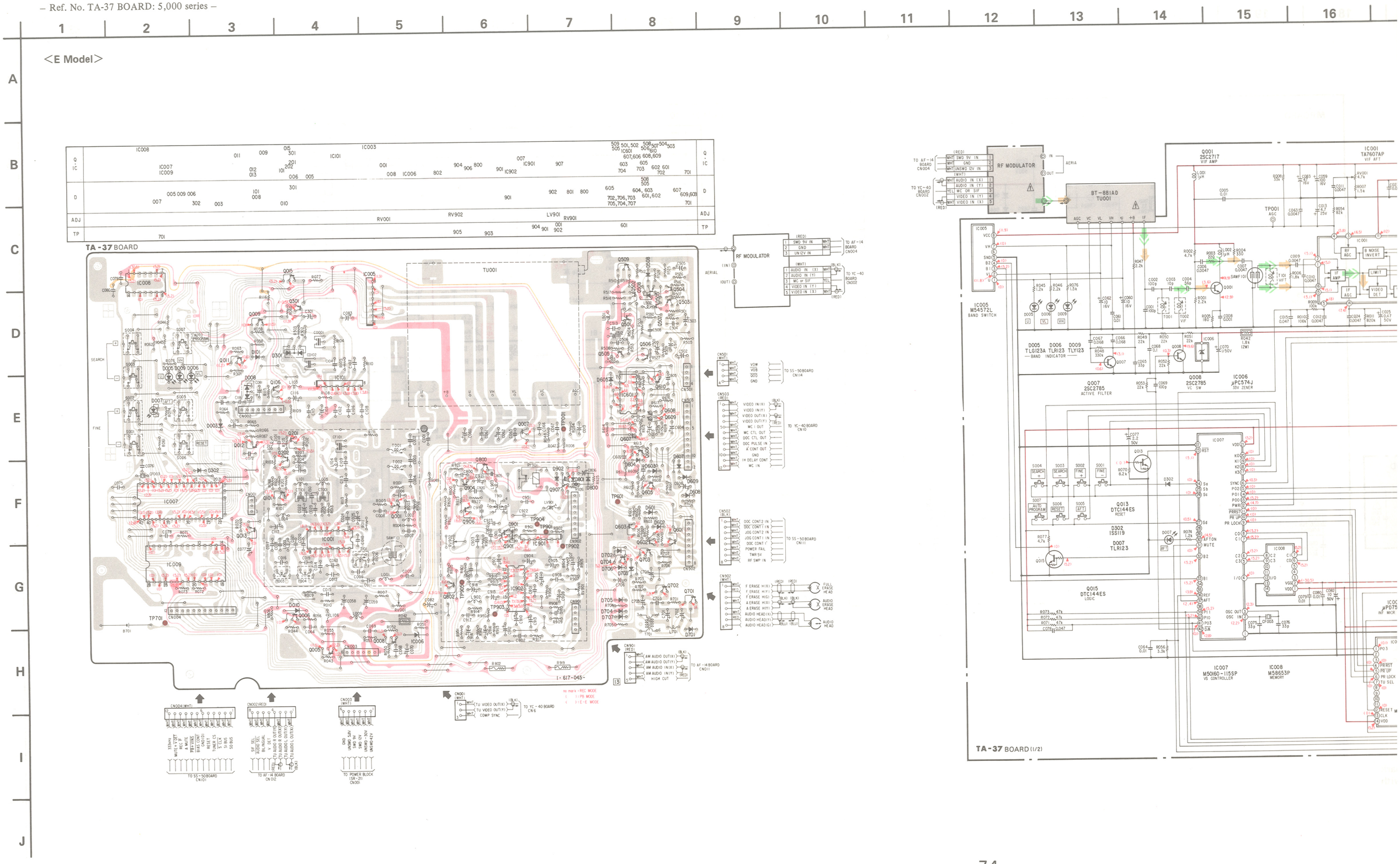

10 11 12 13 14 15 16 17 18 19 20 21 22 23 24 25

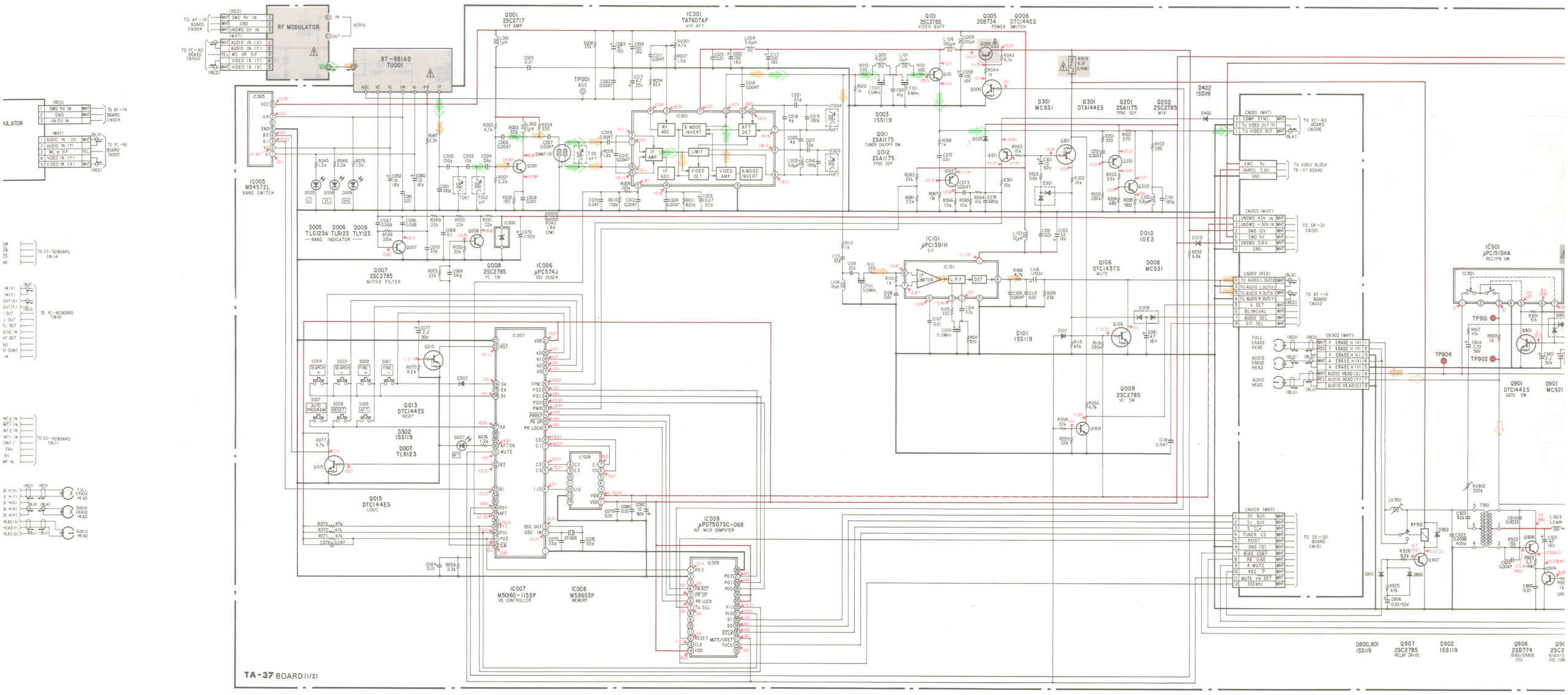

TA-37 BOARD (1/2)

18 19 20 21 22 23 24 25 26 27 28 29 30 31 32 33

A B C D E F G H I J

- Signal path
  - : REC Y & CHROMA SIGNAL
  - : REC AUDIO SIGNAL
  - : PB AUDIO SIGNAL

TA-37 BOARD

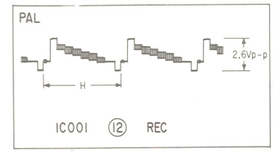

Note on Printed Wiring Board:

- ○—— : Indicates a leadwire mounted on the component side.
- ●—— : Indicates a leadwire mounted on the printed side.
- : soldering side.
- : B+ pattern
- : B− pattern
- Digital transistor (TA-37: Q006, 013, 015, 106, 301, 508, 601, 604, 605, 610, 703, 800, 802, 901) transistors with resistors.
  Refer to TA-37 board schematic diagram for digital transistor.

When indicating parts by reference number, please include the board name.

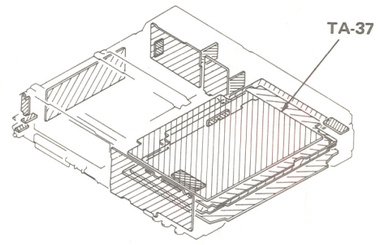

Note on Schematic Diagram:

- All resistors are in ohms, 1/6 W unless otherwise noted. kΩ: 1000 Ω, MΩ: 1000 kΩ
- All capacitors are in μF unless otherwise noted. p: μμF 50WV or less are not indicated except for electrolytics.
- All variable and adjustable resistors have characteristic curve B, unless otherwise noted.
- : nonflammable resistor.
- : fusible resistor.
- The red lines show the main voltages.
- All voltages are dc measured with a VOM (10 MΩ).
- : B+ bus.
- : B− bus.

Note: The components identified by shading and mark ⚠ are critical for safety. Replace only with part number specified.

When indicating parts by reference number, please include the board name.

1-10. M (POWER), CN (POWER), C (POWER), D (POWER), F (POWER) PRINTED WIRING BOARDS AND SCHEMATIC DIAGRAMS

– Ref. No. M BOARD: 11,000 series, CN BOARD: 11,000 series, C BOARD: 11,000 series, D BOARD: 11,000 sereis, F BOARD: 11,000 series –

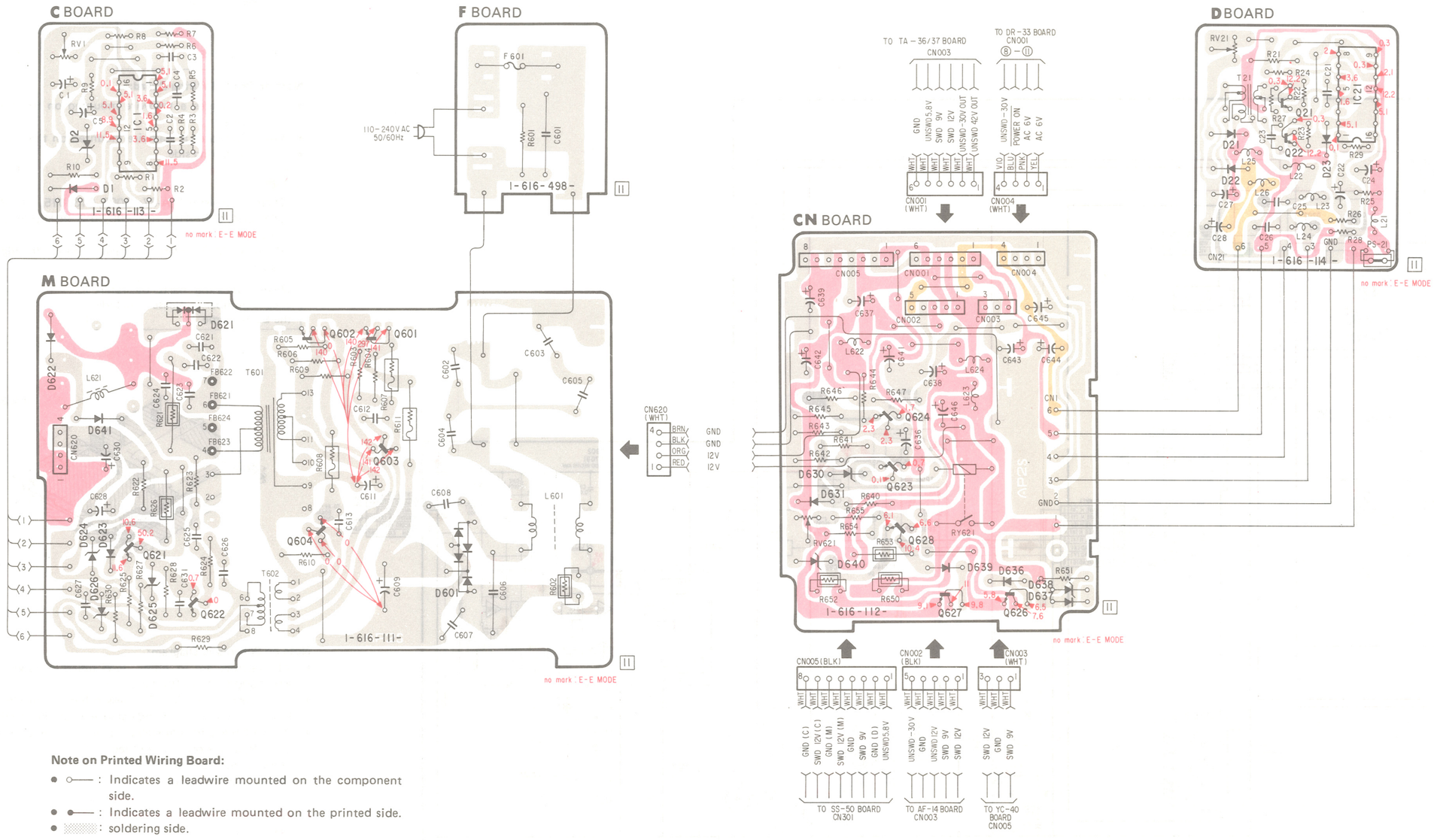

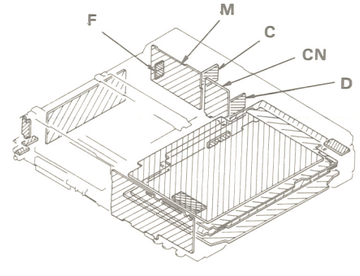

Note on Printed Wiring Board:

- ○—— : Indicates a leadwire mounted on the component side.
- ●—— : Indicates a leadwire mounted on the printed side.
- ▒ : soldering side.
- ▒ : B+ pattern
- ▒ : B– pattern

When indicating parts by reference number, please include the board name.

Note on Schematic Diagram:

- All resistors are in ohms, 1/6 W unless othe
  kΩ: 1000 Ω, MΩ: 1000 kΩ
- All capacitors are in μF unless otherwise no
  50WV or less are not indicated except for e
- All variable and adjustable resistors have c
  curve B, unless otherwise noted.
- ▭ : nonflammable resistor.
- ▭ : fusible resistor.
- The red lines show the main voltages.
- All voltages are dc measured with a VOM (10
- ▬▬ : B+ bus.
- ▬ ▬ : B– bus.

Note: The components identified by shac ⚠ are critical for safety. Repla part number specified.

When indicating parts by reference number, please include the board name.

8 9 10 11 12 13 14 15 16 17 18 19 20 21 22 23 24

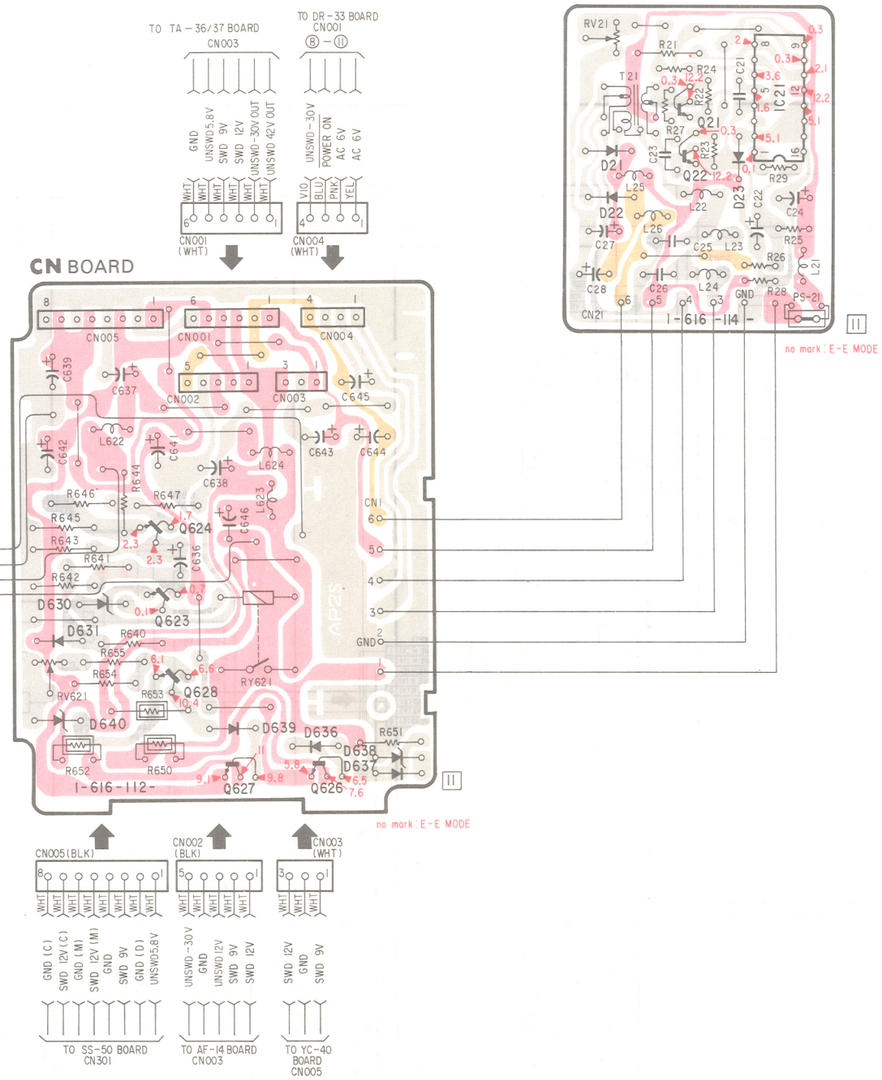

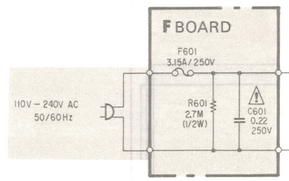

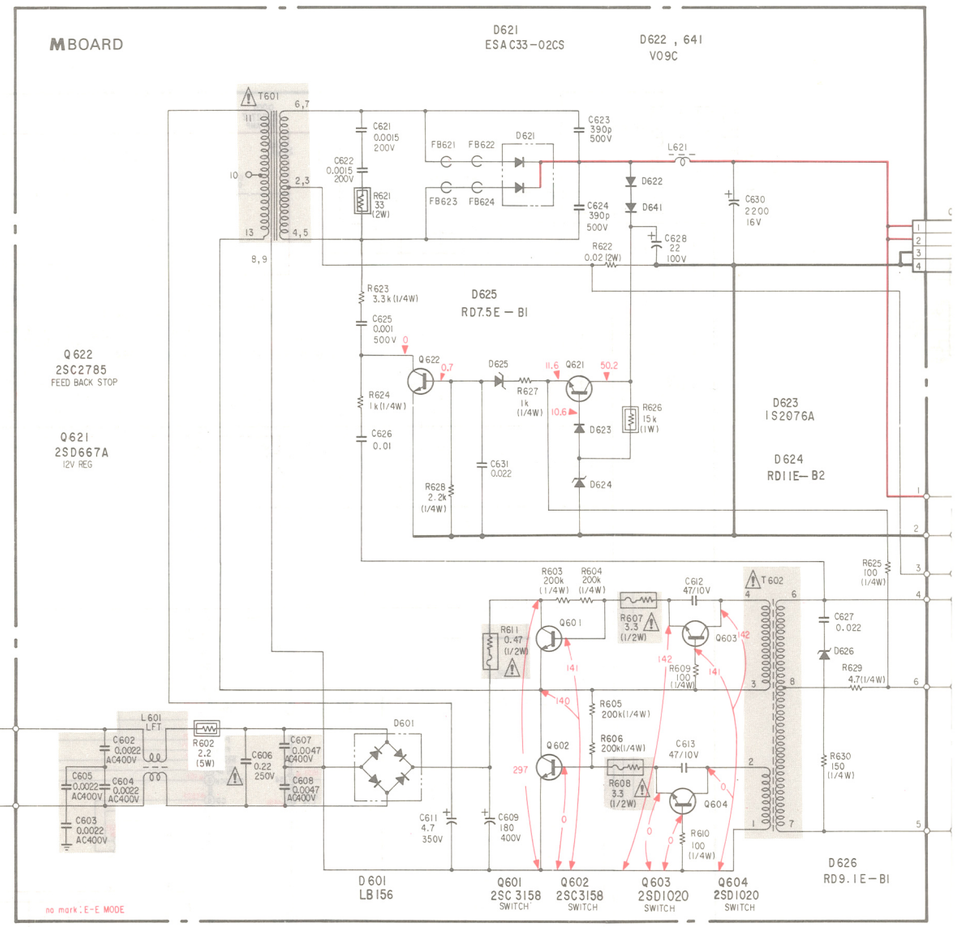

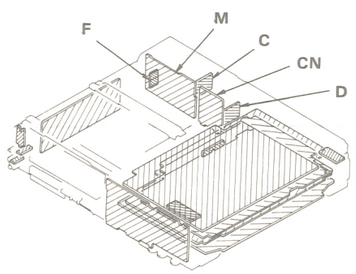

Note on Schematic Diagram:

- All resistors are in ohms, 1/6 W unless otherwise noted. kΩ: 1000 Ω, MΩ: 1000 kΩ
- All capacitors are in μF unless otherwise noted. p: μμF 50WV or less are not indicated except for electrolytics.
- All variable and adjustable resistors have characteristic curve B, unless otherwise noted.
- : nonflammable resistor.
- : fusible resistor.
- The red lines show the main voltages.
- All voltages are dc measured with a VOM (10 MΩ).
- : B+ bus.
- : B– bus.

Note: The components identified by shading and mark ⚠ are critical for safety. Replace only with part number specified.

When indicating parts by reference number, please include the board name.

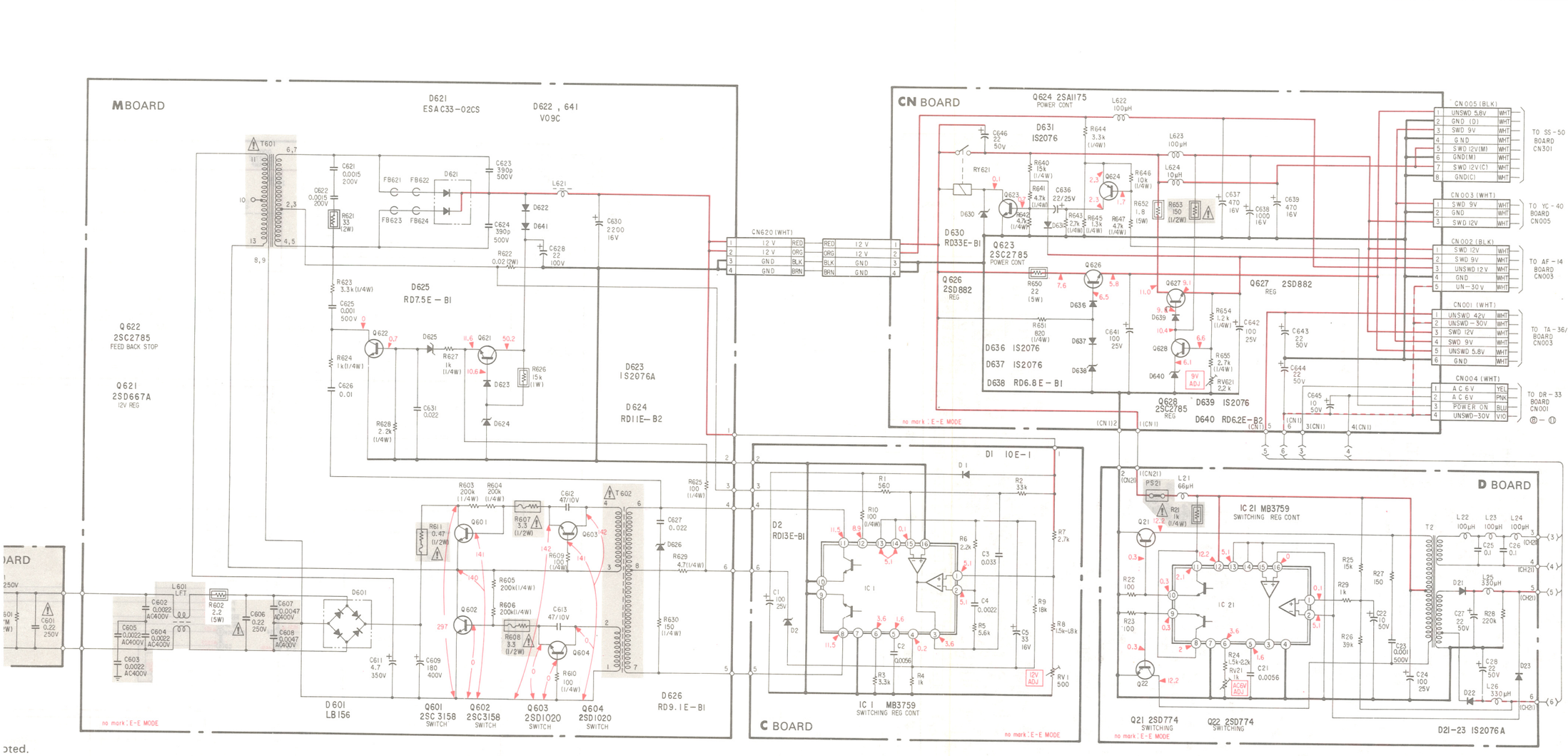
M BOARD
D621 ESAC33-02CS
D622 , 641 V09C
T601
C621 0.0015 200V
C622 0.0015 200V
R621 33 (2W)
C623 390p 500V
C624 390p 500V
FB621 FB622 FB623 FB624
L621
D622
D641
C630 2200 16V
C628 22 100V
R622 0.022(2W)
CN620 (WHT)
12 V RED
12 V ORG
GND BLK
GND BRN
R623 3.3k (1/4W)
C625 0.001 500V
Q622
R624 1k (1/4W)
C626 0.01
D625
R627 1k (1/4W)
Q621
R626 15k (1W)
D623
D624
C631 0.022
R628 2.2k (1/4W)
Q622 2SC2785 FEED BACK STOP
Q621 2SD667A 12V REG
D625 RD7.5E-B1
D623 IS2076A
D624 RD11E-B2
CN BOARD
Q624 2SA1175 POWER CONT
L622 100μH
D631 IS2076
R644 3.3k (1/4W)
C646 22 50V
RY621
R640 15k (1/4W)
R641 4.7k (1/4W)
C636 22/25V
Q623
R642 4.7k (1/4W)
R643 2.7k (1/4W)
D630
D633
R645 1.3k (1/4W)
R647 4.7k (1/4W)
L623 100μH
L624 10μH
Q624
R646 10k (1/4W)
R652 1.8 (5W)
R653 150 (1/2W)
C637 470 16V
C638 1000 16V
C639 470 16V
D630 RD33E-B1
Q623 2SC2785 POWER CONT
Q626 2SD882 REG
R650 22 (5W)
Q626
R651 820 (1/4W)
D636 IS2076
D637 IS2076
D638 RD6.8E-B1
C641 100 25V
Q627
R654 1.2k (1/4W)
C642 100 25V
Q627 2SD882 REG
D639
Q628
R655 2.7k (1/4W)
RV621 2.2k
9V ADJ
D640
Q628 2SC2785 REG
D639 IS2076
D640 RD6.2E-B2
C643 22 50V
C644 22 50V
C645 10 50V
CN005 (BLK)
1 UNSWD 5.8V WHT
2 GND (D) WHT
3 SWD 9V WHT
4 GND WHT
5 SWD 12V(M) WHT
6 GND(M) WHT
7 SWD 12V(C) WHT
8 GND(C) WHT
TO SS-50 BOARD CN301
CN003 (WHT)
1 SWD 9V WHT
2 GND WHT
3 SWD 12V WHT
TO YC-40 BOARD CN005
CN002 (BLK)
1 SWD 12V WHT
2 SWD 9V WHT
3 UNSWD 12V WHT
4 GND WHT
5 UN-30V WHT
TO AF-14 BOARD CN003
CN001 (WHT)
1 UNSWD 42V WHT
2 UNSWD-30V WHT
3 SWD 12V WHT
4 SWD 9V WHT
5 UNSWD 5.8V WHT
6 GND WHT
TO TA-36/37 BOARD CN003
CN004 (WHT)
1 AC 6V YEL
2 AC 6V PNK
3 POWER ON BLU
4 UNSWD-30V VIO
TO DR-33 BOARD CN001
no mark:E-E MODE
D1 10E-1
D1
R1 560
R2 33k
R10 100 (1/4W)
IC 1
R6 2.2k
C3 0.033
C4 0.0022
R5 5.6k
C5 33 16V
R9 18k
R8 1.5k-1.8k
R7 2.7k
C1 100 25V
D2
R3 3.3k
R4 1k
RV1 500
12V ADJ
D2 RD13E-B1
IC 1 MB3759 SWITCHING REG CONT
C BOARD
D BOARD
IC 21 MB3759 SWITCHING REG CONT
PS21
L21 66μH
R21 1k (1/4W)
IC 21
R22 100
R23 100
R25 15k
R27 150
R29 1k
R26 39k
C22 10 50V
C23 0.001 500V
C24 100 25V
R24 1.5k-2.2k
RV21 1k
ACV ADJ
C21 0.0056
Q21
Q22
L22 100μH
L23 100μH
L24 100μH
C25 0.1
C26 0.1
T2
D21
L25 330μH
C27 22 50V
R28 220k
C28 22 50V
D23
D22
L26 330μH
Q21 2SD774 SWITCHING
Q22 2SD774 SWITCHING
D21-23 IS2076A
T602
R603 200k (1/4W)
R604 200k (1/4W)
R611 0.47 (1/2W)
Q601
R607 3.3 (1/2W)
C612 47/10V
Q603
R609 100 (1/4W)
C627 0.022
D626
R629 4.7(1/4W)
R630 150 (1/4W)
R625 100 (1/4W)
R605 200k(1/4W)
R606 200k(1/4W)
Q602
R608 3.3 (1/2W)
C613 47/10V
Q604
R610 100 (1/4W)
L601 LFT
R602 2.2 (5W)
C606 0.22 250V
C607 0.0047 AC400V
C608 0.0047 AC400V
C602 0.0022 AC400V
C604 0.0022 AC400V
C605 0.0022 AC400V
C603 0.0022 AC400V
D601
C611 4.7 350V
C609 180 400V
D601 LB156
Q601 2SC3158 SWITCH
Q602 2SC3158 SWITCH
Q603 2SD1020 SWITCH
Q604 2SD1020 SWITCH
D626 RD9.1E-B1
C601 0.22 250V

2. ELECTRICAL PARTS LIST

NOTE:

The components identified by shading and mark ⚠ are critical for safety. Replace only with part number specified.

When indicating parts by reference number, please include the board name.

- Due to standardization, replacements in the parts list may be different from the parts specified in the diagrams or the components used on the set.
- All variable and adjustable resistors have characteristic curve B, unless otherwise noted.

RESISTORS

- All resistors are in ohms
- F : nonflammable

- Items marked "*" are not stocked since they are seldom required for routine service. Some delay should be anticipated when ordering these items.

CAPACITORS

- MF : μF, PF : μμF

COILS

- MMH : mH, UH : μH

Ref.No	Part No.	Description				Remark
	A-4910-063-A	R STATOR (REEL MOTOR) BOARD, COMPLETE				
		**********				
	*1-560-461-00	PIN, CONNECTOR 5P				
		CAPACITOR				
C1	1-123-821-00	ELECT	47MF	20%	16V	
C2	1-123-821-00	ELECT	47MF	20%	16V	
C3	1-123-821-00	ELECT	47MF	20%	16V	
C4	1-123-821-00	ELECT	47MF	20%	16V	
		DIODE				
H1	8-719-800-31	DIODE THS103A-1				
H2	8-719-800-31	DIODE THS103A-1				
		IC				
IC1	8-759-801-97	IC LB1615				
		RESISTOR				
R1	1-247-823-00	CARBON	470	5%	1/6W	
R2	1-249-429-11	CARBON	10K	5%	1/6W	
R3	1-249-437-11	CARBON	47K	5%	1/6W	
R4	1-249-437-11	CARBON	47K	5%	1/6W	
R5	1-249-437-11	CARBON	47K	5%	1/6W	
R6	1-249-437-11	CARBON	47K	5%	1/6W	
**********						
	*A-6711-658-A	YC-40 BOARD, COMPLETE (ES MODEL)				
		**********				
	*A-6711-698-A	YC-40 BOARD, COMPLETE (E MODEL)				
		**********				
	3-683-631-01	CLAMP				
		BAND PASS FILTER				
BPF001	1-235-098-00	FILTER, BAND PASS				
		CAPACITOR				
C010	1-123-356-00	ELECT	10MF	20%	16V	
C013	1-123-306-00	ELECT	47MF 20%	10V	(ES MODEL)	
C014	1-123-369-00	ELECT	4.7MF 20%	25V	(ES MODEL)	
C015	1-123-306-00	ELECT	47MF 20%	10V	(ES MODEL)	
C016	1-108-589-00	MYLAR	0.027MF 5%	50V	(ES MODEL)	
C017	1-101-004-00	CERAMIC	0.01MF	50V	(ES MODEL)	
C018	1-123-306-00	ELECT	47MF 20%	10V	(ES MODEL)	
C019	1-101-004-00	CERAMIC	0.01MF	50V	(ES MODEL)	
C020	1-101-004-00	CERAMIC	0.01MF		50V	
C021	1-101-004-00	CERAMIC	0.01MF		50V	
C023	1-101-882-00	CERAMIC	51PF	5%	50V	
C024	1-130-047-00	FILM	180PF	5%	50V	
C025	1-106-172-00	MYLAR	0.001MF	5%	50V	
C026	1-101-059-21	CERAMIC	510PF	5%	50V	

Ref.No	Part No.	Description				Remark
C027	1-161-045-00	CERAMIC	0.0033MF	10%	25V	
C028	1-106-172-00	MYLAR	0.001MF	5%	50V	
C029	1-123-382-00	ELECT	3.3MF	20%	50V	
C032	1-102-816-00	CERAMIC	120PF	5%	50V	
C033	1-101-004-00	CERAMIC	0.01MF		50V	
C034	1-101-004-00	CERAMIC	0.01MF		50V	
C035	1-102-816-00	CERAMIC	120PF	5%	50V	
C036	1-101-882-00	CERAMIC	51PF	5%	50V	
C037	1-101-004-00	CERAMIC	0.01MF		50V	
C038	1-101-004-00	CERAMIC	0.01MF		50V	
C039	1-101-004-00	CERAMIC	0.01MF		50V	
C041	1-161-043-00	CERAMIC	0.0022MF	10%	25V	
C042	1-102-516-00	CERAMIC	27PF	5%	50V	
C043	1-101-004-00	CERAMIC	0.01MF		50V	
C044	1-101-004-00	CERAMIC	0.01MF		50V	
C045	1-102-523-00	CERAMIC	56PF	5%	50V	
C046	1-101-004-00	CERAMIC	0.01MF		50V	
C048	1-101-004-00	CERAMIC	0.01MF		50V	
C049	1-101-004-00	CERAMIC	0.01MF		50V	
C050	1-102-865-00	CERAMIC	8PF	0.5PF	50V	
C051	1-102-525-00	CERAMIC	68PF	5%	50V	
C052	1-102-525-00	CERAMIC	68PF	5%	50V	
C053	1-123-380-00	ELECT	1MF	20%	50V	
C054	1-161-040-00	CERAMIC	0.0012MF	10%	25V	
C055	1-123-380-00	ELECT	1MF	20%	50V	
C056	1-102-963-00	CERAMIC	33PF	5%	50V	
C057	1-102-980-00	CERAMIC	270PF	5%	50V	
C058	1-123-306-00	ELECT	47MF	20%	10V	
C059	1-101-004-00	CERAMIC	0.01MF		50V	
C060	1-108-579-00	MYLAR	0.01MF	5%	50V	
C061	1-123-382-00	ELECT	3.3MF	20%	50V	
C062	1-123-306-00	ELECT	47MF	20%	10V	
C063	1-101-004-00	CERAMIC	0.01MF		50V	
C064	1-102-521-00	CERAMIC	43PF	5%	50V	
C065	1-102-525-00	CERAMIC	68PF	5%	50V	
C066	1-102-525-00	CERAMIC	68PF	5%	50V	
C068	1-101-004-00	CERAMIC	0.01MF		50V	
C069	1-102-962-00	CERAMIC	30PF	5%	50V	
C070	1-101-004-00	CERAMIC	0.01MF		50V	
C071	1-123-380-00	ELECT	1MF	20%	50V	
C072	1-101-004-00	CERAMIC	0.01MF		50V	
C073	1-102-525-00	CERAMIC	68PF	5%	50V	
C074	1-102-525-00	CERAMIC	68PF	5%	50V	
C075	1-101-004-00	CERAMIC	0.01MF		50V	
C076	1-102-951-00	CERAMIC	15PF	5%	50V	
C077	1-123-330-00	ELECT	22MF	20%	16V	
C078	1-123-330-00	ELECT	22MF	20%	16V	
C079	1-102-852-00	CERAMIC	47PF	5%	50V	
C080	1-101-004-00	CERAMIC	0.01MF		50V	
C082	1-161-024-00	CERAMIC	0.082MF	10%	25V	
C083	1-102-977-00	CERAMIC	200PF	5%	50V	
C084	1-123-369-00	ELECT	4.7MF	20%	25V	
C085	1-101-004-00	CERAMIC	0.01MF		50V	

MC-Service

YC-40

Ref.No	Part No.	Description			Remark
C086	1-106-174-00	MYLAR	0.0012MF	5%	50V
C087	1-161-057-00	CERAMIC	0.033MF	10%	25V
C092	1-101-004-00	CERAMIC	0.01MF		50V
C093	1-101-006-00	CERAMIC	0.047MF		50V
C094	1-101-006-00	CERAMIC	0.047MF		50V
C095	1-102-976-00	CERAMIC	180PF	5%	50V
C096	1-102-824-00	CERAMIC	470PF	5%	50V
C097	1-102-823-00	CERAMIC	430PF	5%	50V
C098	1-102-820-00	CERAMIC	330PF	5%	50V
C099	1-102-525-00	CERAMIC	68PF	5%	50V
C101	1-108-595-00	MYLAR	0.047MF	5%	50V
C102	1-161-043-00	CERAMIC	0.0022MF	10%	25V
C103	1-106-172-00	MYLAR	0.001MF	5%	50V
C104	1-102-977-00	CERAMIC	200PF	5%	50V
C105	1-102-973-00	CERAMIC	100PF	5%	50V
C106	1-123-356-00	ELECT	10MF	20%	16V
C107	1-161-025-00	CERAMIC	0.1MF	10%	25V
C108	1-101-004-00	CERAMIC	0.01MF		50V
C111	1-102-816-00	CERAMIC	120PF	5%	50V
C112	1-101-004-00	CERAMIC	0.01MF		50V
C113	1-101-006-00	CERAMIC	0.047MF		50V
C114	1-102-973-00	CERAMIC	100PF	5%	50V
C116	1-101-004-00	CERAMIC	0.01MF		50V
C120	1-101-004-00	CERAMIC	0.01MF		50V
C121	1-101-004-00	CERAMIC	0.01MF		50V
C122	1-101-004-00	CERAMIC	0.01MF		50V
C123	1-101-004-00	CERAMIC	0.01MF		50V
C124	1-102-948-21	CERAMIC	11PF	5%	50V
C125	1-123-330-00	ELECT	22MF	20%	16V
C129	1-123-330-00	ELECT	22MF	20%	16V
C130	1-123-356-00	ELECT	10MF	20%	16V
C131	1-123-380-00	ELECT	1MF	20%	50V
C132	1-123-369-00	ELECT	4.7MF	20%	25V
C134	1-102-820-00	CERAMIC	330PF	5%	50V
C135	1-102-823-00	CERAMIC	430PF	5%	50V
C136	1-102-976-00	CERAMIC	180PF	5%	50V
C142	1-123-330-00	ELECT	22MF	20%	16V
C144	1-102-508-00	CERAMIC	10PF	0.5PF	50V
C145	1-102-521-00	CERAMIC	43PF	5%	50V
C146	1-102-521-00	CERAMIC	43PF	5%	50V
C147	1-102-508-00	CERAMIC	10PF	0.5PF	50V
C148	1-101-006-00	CERAMIC	0.047MF		50V
C155	1-101-004-00	CERAMIC	0.01MF		50V
C156	1-101-004-00	CERAMIC	0.01MF		50V
C159	1-102-822-00	CERAMIC	390PF	5%	50V
C177	1-101-361-00	CERAMIC	150PF	5%	50V
C178	1-123-307-00	ELECT	100MF	20%	10V
C179	1-123-307-00	ELECT	100MF	20%	10V
C180	1-123-332-00	ELECT	47MF	20%	16V
C183	1-101-006-00	CERAMIC	0.047MF		50V
C191	1-101-004-00	CERAMIC	0.01MF		50V
C192	1-123-330-00	ELECT	22MF	20%	16V
C196	1-123-380-00	ELECT	1MF	20%	50V

Ref.No	Part No.	Description			Remark
C197	1-123-356-00	ELECT	10MF	20%	16V
C200	1-101-004-00	CERAMIC	0.01MF		50V
C203	1-101-004-00	CERAMIC	0.01MF		50V
C204	1-123-369-00	ELECT	4.7MF	20%	25V
C206	1-101-004-00	CERAMIC	0.01MF		50V
C207	1-161-025-00	CERAMIC	0.1MF	10%	25V
C208	1-123-356-00	ELECT	10MF	20%	16V
C212	1-123-333-00	ELECT	100MF	20%	16V
C217	1-101-006-00	CERAMIC	0.047MF		50V
C219	1-123-356-00	ELECT	10MF	20%	16V
C220	1-101-006-00	CERAMIC	0.047MF		50V
C232	1-101-004-00	CERAMIC	0.01MF	50V	(E MODEL)
C233	1-123-380-00	ELECT	1MF 20%	50V	(E MODEL)
C248	1-101-006-00	CERAMIC	0.047MF		50V
C251	1-101-006-00	CERAMIC	0.047MF		50V
C252	1-102-816-00	CERAMIC	120PF	5%	50V
C253	1-123-356-00	ELECT	10MF	20%	16V
C257	1-101-006-00	CERAMIC	0.047MF		50V
C261	1-123-330-00	ELECT	22MF	20%	16V
C300	1-101-004-00	CERAMIC	0.01MF	50V	(ES MODEL)
C301	1-101-006-00	CERAMIC	0.047MF		50V
C302	1-102-773-00	CERAMIC	330PF	5%	50V
C303	1-161-047-00	CERAMIC	0.0047MF	10%	25V
C401	1-123-381-00	ELECT	2.2MF	20%	50V
C402	1-101-001-00	CERAMIC	0.001MF		50V
C403	1-101-001-00	CERAMIC	0.001MF		50V
C404	1-101-004-00	CERAMIC	0.01MF		50V
C405	1-123-330-00	ELECT	22MF	20%	16V
C406	1-123-330-00	ELECT	22MF	20%	16V
C407	1-102-962-00	CERAMIC	30PF	5%	50V
C408	1-101-888-00	CERAMIC	68PF	5%	50V
C409	1-123-381-00	ELECT	2.2MF	20%	50V
C410	1-102-936-00	CERAMIC	3PF	0.25PF	50V
C411	1-101-005-00	CERAMIC	0.022MF		50V
C412	1-123-318-00	ELECT	33MF	20%	16V
C414	1-123-356-00	ELECT	10MF	20%	16V
C417	1-102-965-00	CERAMIC	39PF	5%	50V
C418	1-101-884-00	CERAMIC	56PF	5%	50V
C419	1-123-356-00	ELECT	10MF	20%	16V
C420	1-123-369-00	ELECT	4.7MF	20%	25V
C501	1-101-004-00	CERAMIC	0.01MF		50V
C502	1-101-004-00	CERAMIC	0.01MF		50V
C503	1-101-004-00	CERAMIC	0.01MF		50V
C504	1-161-055-00	CERAMIC	0.022MF	10%	25V
C505	1-102-822-00	CERAMIC	390PF	5%	50V
C506	1-101-006-00	CERAMIC	0.047MF		50V
C507	1-123-330-00	ELECT	22MF	20%	16V
C613	1-101-004-00	CERAMIC	0.01MF	50V	(ES MODEL)
C701	1-102-530-00	CERAMIC	120PF	5%	50V
C702	1-123-380-00	ELECT	1MF	20%	50V
C703	1-123-380-00	ELECT	1MF	20%	50V
C704	1-123-380-00	ELECT	1MF	20%	50V
C705	1-123-380-00	ELECT	1MF	20%	50V

When indicating parts by reference number, please include the board name.

Ref.No	Part No.	Description			Remark
C720	1-101-004-00	CERAMIC	0.01MF		50V
C721	1-123-356-00	ELECT	10MF	20%	16V
C722	1-123-369-00	ELECT	4.7MF	20%	25V
C723	1-161-057-00	CERAMIC	0.033MF	10%	25V
C731	1-101-004-00	CERAMIC	0.01MF		50V
C732	1-101-004-00	CERAMIC	0.01MF		50V
C733	1-101-004-00	CERAMIC	0.01MF		50V
C734	1-101-004-00	CERAMIC	0.01MF		50V
C740	1-101-004-00	CERAMIC	0.01MF		50V
C741	1-101-006-00	CERAMIC	0.047MF		50V
C743	1-102-904-00	CERAMIC	110PF	5%	50V
C744	1-123-330-00	ELECT	22MF	20%	16V
C745	1-102-518-00	CERAMIC	33PF	5%	50V
C746	1-101-974-00	CERAMIC	20PF	5%	50V
C751	1-123-330-00	ELECT	22MF	20%	16V
C752	1-101-004-00	CERAMIC	0.01MF		50V
C755	1-123-330-00	ELECT	22MF	20%	16V
C756	1-101-004-00	CERAMIC	0.01MF		50V
C757	1-123-330-00	ELECT	22MF	20%	16V
C758	1-101-004-00	CERAMIC	0.01MF		50V
C759	1-101-006-00	CERAMIC	0.047MF		50V
C760	1-101-006-00	CERAMIC	0.047MF	50V	(ES MODEL)
C761	1-102-128-21	CERAMIC	0.0082MF	10%	50V
C762	1-102-824-00	CERAMIC	470PF	5%	50V
C763	1-123-330-00	ELECT	22MF	20%	16V
C765	1-123-356-00	ELECT	10MF	20%	16V
C766	1-102-973-00	CERAMIC	100PF	5%	50V
C767	1-123-330-00	ELECT	22MF	20%	16V
C768	1-124-343-00	ELECT	2200MF	20%	16V
C769	1-161-013-00	CERAMIC	0.01MF	10%	25V
C770	1-102-525-00	CERAMIC	68PF	5%	50V
C771	1-123-356-00	ELECT	10MF	20%	16V
C772	1-123-356-00	ELECT	10MF	20%	16V
C773	1-123-356-00	ELECT	10MF	20%	16V
C774	1-102-516-00	CERAMIC	27PF	5%	50V
C775	1-102-118-00	CERAMIC	0.0012MF	10%	50V
C777	1-161-025-00	CERAMIC	0.1MF	10%	25V
C778	1-102-516-00	CERAMIC	27PF	5%	50V
C801	1-102-865-00	CERAMIC	8PF	0.5PF	50V
C802	1-101-004-00	CERAMIC	0.01MF		50V
C803	1-123-330-00	ELECT	22MF	20%	16V
C804	1-123-306-00	ELECT	47MF	20%	6.3V
C805	1-101-001-00	CERAMIC	0.001MF		50V
C807	1-101-006-00	CERAMIC	0.047MF		50V
C809	1-101-004-00	CERAMIC	0.01MF		50V
C910	1-123-356-00	ELECT	10MF	20%	16V
C916	1-102-816-00	CERAMIC	120PF	5%	50V
C921	1-123-318-00	ELECT	33MF	20%	16V
C926	1-101-004-00	CERAMIC	0.01MF		50V
C927	1-161-025-00	CERAMIC	0.1MF	10%	25V
C928	1-161-025-00	CERAMIC	0.1MF	10%	25V
C929	1-123-330-00	ELECT	22MF	20%	16V
C930	1-123-356-00	ELECT	10MF	20%	16V

Ref.No	Part No.	Description			Remark
C931	1-123-356-00	ELECT	10MF	20%	16V
C932	1-124-475-11	ELECT	470MF	20%	16V
C933	1-123-356-00	ELECT	10MF	20%	16V
C934	1-123-356-00	ELECT	10MF	20%	16V
C935	1-124-473-11	ELECT	1000MF	20%	10V
C936	1-123-332-00	ELECT	47MF	20%	16V
C937	1-101-004-00	CERAMIC	0.01MF		50V
C943	1-123-356-00	ELECT	10MF	20%	16V
C944	1-123-333-00	ELECT	100MF	20%	16V
C945	1-124-473-11	ELECT	1000MF	20%	10V
C947	1-101-004-00	CERAMIC	0.01MF		50V
C951	1-101-004-00	CERAMIC	0.01MF		50V
C952	1-123-332-00	ELECT	47MF	20%	16V
C957	1-123-356-00	ELECT	10MF	20%	16V
C962	1-123-330-00	ELECT	22MF	20%	16V

FILTER

CF001	1-527-998-00	FILTER, CERAMIC	(ES MODEL)
CF002	1-527-875-00	FILTER, CERAMIC	
CF003	1-527-849-00	FILTER, CERAMIC	

CONNECTOR

CN001	*1-560-896-00	PIN, CONNECTOR 8P
CN002	*1-564-030-00	PIN, CONNECTOR 5P
CN003	*1-560-893-00	PIN, CONNECTOR 5P
CN004	*1-564-031-00	PIN, CONNECTOR 6P
CN005	*1-564-028-00	PIN, CONNECTOR 3P
CN006	*1-564-028-00	PIN, CONNECTOR 3P
CN007	*1-564-031-00	PIN, CONNECTOR 6P
CN008	*1-564-037-11	PIN, CONNECTOR 12P
CN009	*1-560-898-00	PIN, CONNECTOR 10P
CN010	*1-564-037-11	PIN, CONNECTOR 12P
CN011	*1-560-890-00	PIN, CONNECTOR 2P

JACK

CNJ001	1-536-936-21	CONNECTOR BOARD, BNC
CNJ003	1-561-534-00	SOCKET 21P

TRIMMER

CV001	1-141-275-00	CAP, TRIMMER

DIODE

D005	8-719-911-19	DIODE 1SS119	(ES MODEL)
D006	8-719-000-06	DIODE MC921	(ES MODEL)
D009	8-719-000-06	DIODE MC921	(ES MODEL)
D012	8-719-911-19	DIODE 1SS119	(ES MODEL)
D013	8-719-911-19	DIODE 1SS119	
D014	8-719-911-19	DIODE 1SS119	
D016	8-719-000-12	DIODE MC931	
D017	8-719-911-19	DIODE 1SS119	
D018	8-719-911-19	DIODE 1SS119	
D019	8-719-911-19	DIODE 1SS119	

When indicating parts by reference number, please include the board name.

YC-40

Ref.No	Part No.	Description	Remark
D020	8-719-911-19	DIODE 1SS119	
D021	8-719-911-19	DIODE 1SS119	
D022	8-719-911-19	DIODE 1SS119	
D025	8-719-911-19	DIODE 1SS119	
D027	8-719-000-06	DIODE MC921	
D029	8-719-100-56	DIODE RD10EB1	
D040	8-719-100-40	DIODE RD6.8EB1	
D190	8-719-911-19	DIODE 1SS119	
D703	8-719-911-19	DIODE 1SS119	
D704	8-719-911-19	DIODE 1SS119	
D705	8-719-911-19	DIODE 1SS119	
D706	8-719-911-19	DIODE 1SS119	
D707	8-719-911-19	DIODE 1SS119	
D801	8-719-911-19	DIODE 1SS119	
D802	8-719-911-19	DIODE 1SS119	
D803	8-719-911-19	DIODE 1SS119	
D804	8-719-911-19	DIODE 1SS119	
D805	8-719-911-19	DIODE 1SS119	
D806	8-719-911-19	DIODE 1SS119	
D809	8-719-911-19	DIODE 1SS119	
D810	8-719-911-19	DIODE 1SS119	
D811	8-719-102-88	DIODE RD9.1EN3	
D812	8-719-115-07	DIODE RD15E-B	
D813	8-719-100-71	DIODE RD15E-B2	
D814	8-719-911-19	DIODE 1SS119	(ES MODEL)
D909	8-719-200-02	DIODE 10E-2	
D915	8-719-901-33	DIODE 1SS133	
		DELAY LINE	
DL001	1-415-313-00	DELAY LINE (1H)	
DL401	1-415-352-11	DELAY LINE, 1H	
DL501	1-415-419-21	DELAY LINE	
		IC	
IC001	8-759-909-20	IC BA634	
IC002	8-759-904-95	IC BA7007	
IC003	8-759-202-47	IC CX10023	
IC004	8-759-208-94	IC CX894	
IC005	8-752-006-10	IC CX20061	
IC006	8-759-203-99	IC CX10021B-NP	
IC009	8-759-101-62	IC CX20043	
IC011	8-752-006-10	IC CX20061	
IC020	8-759-045-38	IC MC14538BCP	
IC401	8-758-662-00	IC CX866B	
IC901	8-759-979-26	IC CX7926	
		COIL	
L001	1-410-450-11	MICRO INDUCTOR 3.9MMH	
L002	1-410-411-11	MICRO INDUCTOR 2.2UH	
L003	1-408-407-00	MICRO INDUCTOR 6.8UH	
L004	1-408-406-00	MICRO INDUCTOR 5.6UH	
L005	1-408-415-00	MICRO INDUCTOR 33UH	

The components identified by shading and mark ⚠ are critical for safety. Replace only with part number specified.

When indicating parts by reference number, please include the board name.

Ref.No	Part No.	Description	Remark
L006	1-408-426-00	MICRO INDUCTOR 270UH	
L007	1-408-427-00	MICRO INDUCTOR 330UH	
L008	1-408-421-00	MICRO INDUCTOR 100UH	
L009	1-408-417-00	MICRO INDUCTOR 47UH	
L011	1-408-423-00	MICRO INDUCTOR 150UH	
L012	1-408-409-00	MICRO INDUCTOR 10UH	
L014	1-408-422-00	MICRO INDUCTOR 120UH	
L016	1-408-409-00	MICRO INDUCTOR 10UH	
L017	1-408-423-00	MICRO INDUCTOR 150UH	
L021	1-408-421-00	MICRO INDUCTOR 100UH	
L022	1-408-422-00	MICRO INDUCTOR 120UH	
L023	1-408-421-00	MICRO INDUCTOR 100UH	
L036	1-408-429-00	MICRO INDUCTOR 470UH	
L050	1-408-414-00	MICRO INDUCTOR 27UH	
L051	1-408-417-00	MICRO INDUCTOR 47UH	
L052	1-408-419-00	MICRO INDUCTOR 68UH	
L053	1-408-423-00	MICRO INDUCTOR 150UH	
L055	1-408-409-00	MICRO INDUCTOR 10UH	
L060	1-408-429-00	MICRO INDUCTOR 470UH	
L061	1-408-414-00	MICRO INDUCTOR 27UH	
L062	1-408-419-00	MICRO INDUCTOR 68UH	
L401	1-408-397-00	MICRO INDUCTOR 1UH	
L402	1-408-397-00	MICRO INDUCTOR 1UH	
L501	1-408-408-00	MICRO INDUCTOR 8.2UH	
L701	1-408-415-00	MICRO INDUCTOR 33UH	
L720	1-410-122-11	MICRO INDUCTOR 1.8MMH	
L801	1-408-421-00	MICRO INDUCTOR 100UH	
L802	1-408-415-00	MICRO INDUCTOR 33UH	
		FILTER	
LPF001	1-235-097-00	FILTER, LOW PASS	
		VARIABLE COIL	
LV001	1-407-291-00	MICRO INDUCTOR 15MMH	(ES MODEL)
LV002	1-408-532-00	COIL, VARIABLE	(ES MODEL)
LV003	1-408-513-00	COIL (VARIABLE)	(ES MODEL)
LV501	1-408-512-00	COIL (VARIABLE)	
		IC LINK	
PS001⚠	1-532-685-00	LINK, IC	
		TRANSISTOR	
Q010	8-729-177-43	TRANSISTOR 2SD774	
Q011	8-729-204-83	TRANSISTOR 2SA1048	
Q014	8-729-113-33	TRANSISTOR 2SB733	
Q015	8-729-245-83	TRANSISTOR 2SC2458	
Q016	8-729-245-83	TRANSISTOR 2SC2458	
Q019	8-729-204-83	TRANSISTOR 2SA1048	(ES MODEL)
Q020	8-729-204-83	TRANSISTOR 2SA1048	
Q021	8-729-245-83	TRANSISTOR 2SC2458	(ES MODEL)
Q022	8-729-245-83	TRANSISTOR 2SC2458	
Q023	8-729-245-83	TRANSISTOR 2SC2458	

Ref.No	Part No.	Description	Remark
Q024	8-729-204-83	TRANSISTOR 2SA1048	
Q025	8-729-900-85	TRANSISTOR DTC144WS	(ES MODEL)
Q026	8-729-204-83	TRANSISTOR 2SA1048	
Q027	8-729-204-83	TRANSISTOR 2SA1048	(ES MODEL)
Q028	8-729-245-83	TRANSISTOR 2SC2458	
Q029	8-729-245-83	TRANSISTOR 2SC2458	(ES MODEL)
Q030	8-729-245-83	TRANSISTOR 2SC2458	
Q031	8-729-900-36	TRANSISTOR DTC124ES	
Q033	8-729-245-83	TRANSISTOR 2SC2458	
Q034	8-729-245-83	TRANSISTOR 2SC2458	
Q035	8-729-900-80	TRANSISTOR DTC114ES	
Q036	8-729-245-83	TRANSISTOR 2SC2458	
Q037	8-729-204-83	TRANSISTOR 2SA1048	
Q038	8-729-384-46	TRANSISTOR 2SA844	
Q039	8-729-603-30	TRANSISTOR 2SC403SP	
Q040	8-729-603-30	TRANSISTOR 2SC403SP	
Q041	8-729-384-46	TRANSISTOR 2SA844	
Q048	8-729-603-30	TRANSISTOR 2SC403SP	
Q049	8-729-603-30	TRANSISTOR 2SC403SP	
Q050	8-729-603-30	TRANSISTOR 2SC403SP	
Q051	8-729-384-46	TRANSISTOR 2SA844	
Q056	8-729-245-83	TRANSISTOR 2SC2458	
Q061	8-729-245-83	TRANSISTOR 2SC2458	
Q068	8-729-245-83	TRANSISTOR 2SC2458	
Q070	8-729-245-83	TRANSISTOR 2SC2458	
Q071	8-729-245-83	TRANSISTOR 2SC2458	
Q076	8-729-204-83	TRANSISTOR 2SA1048	(E MODEL)
Q077	8-729-245-83	TRANSISTOR 2SC2458	(E MODEL)
Q080	8-729-245-83	TRANSISTOR 2SC2458	
Q100	8-729-900-85	TRANSISTOR DTC144WS	
Q101	8-729-900-89	TRANSISTOR DTC144ES	
Q102	8-729-900-65	TRANSISTOR DTA144ES	
Q103	8-729-245-83	TRANSISTOR 2SC2458	
Q401	8-729-245-83	TRANSISTOR 2SC2458	
Q501	8-729-245-83	TRANSISTOR 2SC2458	
Q502	8-729-245-83	TRANSISTOR 2SC2458	
Q503	8-729-245-83	TRANSISTOR 2SC2458	
Q504	8-729-245-83	TRANSISTOR 2SC2458	
Q620	8-729-204-83	TRANSISTOR 2SA1048	(ES MODEL)
Q701	8-729-245-83	TRANSISTOR 2SC2458	
Q702	8-729-900-89	TRANSISTOR DTC144ES	
Q703	8-729-204-83	TRANSISTOR 2SA1048	
Q704	8-729-900-89	TRANSISTOR DTC144ES	
Q707	8-729-900-89	TRANSISTOR DTC144ES	
Q709	8-729-900-36	TRANSISTOR DTC124ES	
Q715	8-729-245-83	TRANSISTOR 2SC2458	
Q716	8-729-245-83	TRANSISTOR 2SC2458	
Q717	8-729-245-83	TRANSISTOR 2SC2458	
Q720	8-729-900-89	TRANSISTOR DTC144ES	
Q721	8-729-900-89	TRANSISTOR DTC144ES	
Q806	8-729-245-83	TRANSISTOR 2SC2458	(ES MODEL)
Q810	8-729-900-89	TRANSISTOR DTC144ES	
Q811	8-729-900-89	TRANSISTOR DTC144ES	
Q812	8-729-900-89	TRANSISTOR DTC144ES	
Q813	8-729-900-89	TRANSISTOR DTC144ES	
Q814	8-729-900-89	TRANSISTOR DTC144ES	
Q815	8-729-900-89	TRANSISTOR DTC144ES	
Q816	8-729-603-30	TRANSISTOR 2SC403SP	
Q817	8-729-603-30	TRANSISTOR 2SC403SP	
Q818	8-729-603-30	TRANSISTOR 2SC403SP	
Q819	8-729-603-30	TRANSISTOR 2SC403SP	
Q820	8-729-603-30	TRANSISTOR 2SC403SP	
Q821	8-729-204-83	TRANSISTOR 2SA1048	
Q822	8-729-245-83	TRANSISTOR 2SC2458	
Q823	8-729-204-83	TRANSISTOR 2SA1048	
Q824	8-729-245-83	TRANSISTOR 2SC2458	
Q825	8-729-603-30	TRANSISTOR 2SC403SP	
Q826	8-729-900-89	TRANSISTOR DTC144ES	
Q827	8-729-245-83	TRANSISTOR 2SC2458	
Q832	8-729-603-30	TRANSISTOR 2SC403SP	
Q833	8-729-603-30	TRANSISTOR 2SC403SP	
Q834	8-729-900-80	TRANSISTOR DTC114ES	
Q837	8-729-384-46	TRANSISTOR 2SA844	
Q838	8-729-245-83	TRANSISTOR 2SC2458	
Q839	8-729-245-83	TRANSISTOR 2SC2458	
Q840	8-729-603-30	TRANSISTOR 2SC403SP	
Q842	8-729-900-36	TRANSISTOR DTC124ES	
Q905	8-729-177-43	TRANSISTOR 2SD774	
Q906	8-729-204-83	TRANSISTOR 2SA1048	
Q910	8-729-900-36	TRANSISTOR DTC124ES	
Q921	8-729-204-83	TRANSISTOR 2SA1048	
Q922	8-729-900-36	TRANSISTOR DTC124ES	
Q923	8-729-245-83	TRANSISTOR 2SC2458	
Q925	8-729-245-83	TRANSISTOR 2SC2458	
Q926	8-729-900-89	TRANSISTOR DTC144ES	
Q928	8-729-245-83	TRANSISTOR 2SC2458	

RESISTOR

R032	1-247-831-00	CARBON	1K	5%	1/6W
R035	1-247-859-00	CARBON	15K	5%	1/6W
R038	1-247-837-00	CARBON	1.8K	5%	1/6W
R039	⚠1-212-857-00	FUSIBLE	10	5%	1/4W F
R046	1-249-419-11	CARBON	1.5K	5%	1/6W(ES MODEL)
R048	1-247-847-00	CARBON	4.7K	5%	1/6W(ES MODEL)
R050	1-247-853-00	CARBON	8.2K	5%	1/6W
R051	1-247-821-00	CARBON	390	5%	1/6W
R052	1-247-819-00	CARBON	330	5%	1/6W
R053	1-247-843-00	CARBON	3.3K	5%	1/6W
R054	1-247-847-00	CARBON	4.7K	5%	1/6W
R055	1-247-849-00	CARBON	5.6K	5%	1/6W(ES MODEL)
R056	1-247-867-00	CARBON	33K	5%	1/6W
R058	1-247-873-00	CARBON	56K	5%	1/6W
R059	1-247-863-00	CARBON	22K	5%	1/6W
R060	1-247-867-00	CARBON	33K	5%	1/6W
R061	1-249-429-11	CARBON	10K	5%	1/6W
R062	1-249-429-11	CARBON	10K	5%	1/6W

The components identified by shading and mark ⚠ are critical for safety. Replace only with part number specified.

When indicating parts by reference number, please include the board name.

YC-40

Ref.No	Part No.	Description				Remark
R063	1-247-841-00	CARBON	2.7K	5%	1/6W	
R064	1-247-848-00	CARBON	5.1K	5%	1/6W	
R065	1-247-889-00	CARBON	270K	5%	1/6W	
R066	1-247-870-00	CARBON	43K	5%	1/6W	
R067	1-247-862-00	CARBON	20K	5%	1/6W	
R068	1-247-838-00	CARBON	2K	5%	1/6W	
R069	1-247-831-00	CARBON	1K	5%	1/6W	
R070	1-247-831-00	CARBON	1K	5%	1/6W	
R071	1-247-851-00	CARBON	6.8K	5%	1/6W	
R072	1-247-841-00	CARBON	2.7K	5%	1/6W	
R073	1-247-831-00	CARBON	1K	5%	1/6W	
R074	1-247-831-00	CARBON	1K	5%	1/6W	
R075	1-247-815-00	CARBON	220	5%	1/6W	
R076	1-249-429-11	CARBON	10K	5%	1/6W	
R079	1-249-429-11	CARBON	10K	5%	1/6W(ES MODEL)	
R080	1-247-853-00	CARBON	8.2K	5%	1/6W(ES MODEL)	
R081	1-247-843-00	CARBON	3.3K	5%	1/6W	
R082	1-249-437-11	CARBON	47K	5%	1/6W	
R083	1-249-414-11	CARBON	560	5%	1/6W(ES MODEL)	
R084	1-247-831-00	CARBON	1K	5%	1/6W(ES MODEL)	
R085	1-247-800-00	CARBON	51	5%	1/6W(ES MODEL)	
R086	1-249-414-11	CARBON	560	5%	1/6W	
R087	1-249-414-11	CARBON	560	5%	1/6W	
R088	1-247-807-00	CARBON	100	5%	1/6W	
R091	1-247-824-00	CARBON	510	5%	1/6W(ES MODEL)	
R092	1-247-785-00	CARBON	12	5%	1/6W(ES MODEL)	
R093	1-247-806-00	CARBON	91	5%	1/6W(ES MODEL)	
R094	1-249-437-11	CARBON	47K	5%	1/6W	
R096	1-247-879-00	CARBON	100K	5%	1/6W(ES MODEL)	
R097	1-247-881-00	CARBON	120K	5%	1/6W(ES MODEL)	
R098	1-247-891-00	CARBON	330K	5%	1/6W	
R100	1-247-869-00	CARBON	39K	5%	1/6W(ES MODEL)	
R101	1-247-867-00	CARBON	33K	5%	1/6W(ES MODEL)	
R103	1-247-831-00	CARBON	1K	5%	1/6W	
R104	1-249-421-11	CARBON	2.2K	5%	1/6W	
R105	1-247-829-00	CARBON	820	5%	1/6W	
R106	1-247-831-00	CARBON	1K	5%	1/6W	
R107	1-247-824-00	CARBON	510	5%	1/6W	
R108	1-249-421-11	CARBON	2.2K	5%	1/6W	
R109	1-247-867-00	CARBON	33K	5%	1/6W	
R111	1-247-851-00	CARBON	6.8K	5%	1/6W	
R112	1-247-851-00	CARBON	6.8K	5%	1/6W	
R113	1-247-843-00	CARBON	3.3K	5%	1/6W	
R114	1-247-828-00	CARBON	750	5%	1/6W	
R115	1-247-879-00	CARBON	100K	5%	1/6W	
R116	1-247-853-00	CARBON	8.2K	5%	1/6W	
R117	1-247-846-00	CARBON	4.3K	5%	1/6W	
R118	1-247-815-00	CARBON	220	5%	1/6W	
R119	1-247-847-00	CARBON	4.7K	5%	1/6W	
R120	1-247-831-00	CARBON	1K	5%	1/6W	
R121	1-247-831-00	CARBON	1K	5%	1/6W	
R122	1-249-421-11	CARBON	2.2K	5%	1/6W	
R125	1-247-831-00	CARBON	1K	5%	1/6W	
R126	1-247-831-00	CARBON	1K	5%	1/6W	
R127	1-249-419-11	CARBON	1.5K	5%	1/6W	
R128	1-247-831-00	CARBON	1K	5%	1/6W	
R129	1-247-867-00	CARBON	33K	5%	1/6W	
R130	1-247-843-00	CARBON	3.3K	5%	1/6W	
R131	1-247-841-00	CARBON	2.7K	5%	1/6W	
R132	1-247-887-00	CARBON	220K	5%	1/6W	
R133	1-247-807-00	CARBON	100	5%	1/6W	
R134	1-247-831-00	CARBON	1K	5%	1/6W	
R135	1-247-883-00	CARBON	150K	5%	1/6W	
R136	1-247-879-00	CARBON	100K	5%	1/6W	
R137	1-247-857-00	CARBON	12K	5%	1/6W	
R138	1-249-434-11	CARBON	27K	5%	1/6W	
R139	1-247-841-00	CARBON	2.7K	5%	1/6W	
R140	1-247-815-00	CARBON	220	5%	1/6W	
R141	1-247-831-00	CARBON	1K	5%	1/6W	
R142	1-247-842-00	CARBON	3K	5%	1/6W	
R143	1-247-833-00	CARBON	1.2K	5%	1/6W	
R144	1-247-824-00	CARBON	510	5%	1/6W	
R146	1-247-831-00	CARBON	1K	5%	1/6W	
R147	1-249-429-11	CARBON	10K	5%	1/6W	
R148	1-247-831-00	CARBON	1K	5%	1/6W	
R149	1-247-819-00	CARBON	330	5%	1/6W	
R150	1-247-863-00	CARBON	22K	5%	1/6W	
R151	1-247-812-00	CARBON	160	5%	1/6W	
R152	1-247-829-00	CARBON	820	5%	1/6W	
R153	1-247-863-00	CARBON	22K	5%	1/6W	
R154	1-247-821-00	CARBON	390	5%	1/6W	
R155	1-249-421-11	CARBON	2.2K	5%	1/6W	
R157	1-247-837-00	CARBON	1.8K	5%	1/6W	
R158	1-247-817-00	CARBON	270	5%	1/6W	
R159	1-247-813-00	CARBON	180	5%	1/6W	
R160	1-247-832-00	CARBON	1.1K	5%	1/6W	
R161	1-249-429-11	CARBON	10K	5%	1/6W	
R163	1-247-831-00	CARBON	1K	5%	1/6W	
R165	1-247-833-00	CARBON	1.2K	5%	1/6W	
R166	1-247-807-00	CARBON	100	5%	1/6W	
R171	1-247-901-00	CARBON	820K	5%	1/6W	
R172	1-247-857-00	CARBON	12K	5%	1/6W	
R173	1-247-861-00	CARBON	18K	5%	1/6W	
R174	1-249-421-11	CARBON	2.2K	5%	1/6W	
R175	1-247-831-00	CARBON	1K	5%	1/6W	
R176	1-249-421-11	CARBON	2.2K	5%	1/6W	
R178	1-249-421-11	CARBON	2.2K	5%	1/6W	
R179	1-247-843-00	CARBON	3.3K	5%	1/6W	
R181	1-249-419-11	CARBON	1.5K	5%	1/6W	
R182	1-247-819-00	CARBON	330	5%	1/6W	
R183	1-249-421-11	CARBON	2.2K	5%	1/6W	
R184	1-247-807-00	CARBON	100	5%	1/6W	
R185	1-247-843-00	CARBON	3.3K	5%	1/6W	
R189	1-249-414-11	CARBON	560	5%	1/6W	
R190	1-249-414-11	CARBON	560	5%	1/6W	
R192	1-247-831-00	CARBON	1K	5%	1/6W	

When indicating parts by reference number, please include the board name.

Ref.No	Part No.	Description				Remark
R193	1-249-429-11	CARBON	10K	5%	1/6W	
R194	1-247-819-00	CARBON	330	5%	1/6W	
R195	1-247-812-00	CARBON	160	5%	1/6W	
R196	1-247-863-00	CARBON	22K	5%	1/6W	
R197	1-247-863-00	CARBON	22K	5%	1/6W	
R198	1-247-829-00	CARBON	820	5%	1/6W	
R199	1-247-821-00	CARBON	390	5%	1/6W	
R200	1-249-421-11	CARBON	2.2K	5%	1/6W	
R201	1-247-837-00	CARBON	1.8K	5%	1/6W	
R203	1-247-813-00	CARBON	180	5%	1/6W	
R204	1-247-817-00	CARBON	270	5%	1/6W	
R205	1-247-807-00	CARBON	100	5%	1/6W	
R206	1-247-831-00	CARBON	1K	5%	1/6W	
R207	1-247-873-00	CARBON	56K	5%	1/6W	
R208	1-247-873-00	CARBON	56K	5%	1/6W	
R214	1-247-831-00	CARBON	1K	5%	1/6W	
R215	1-247-831-00	CARBON	1K	5%	1/6W	
R216	1-247-819-00	CARBON	330	5%	1/6W	
R217	1-249-421-11	CARBON	2.2K	5%	1/6W	
R218	1-247-857-00	CARBON	12K	5%	1/6W	
R219	1-247-873-00	CARBON	56K	5%	1/6W	
R220	1-249-434-11	CARBON	27K	5%	1/6W	
R221	1-247-849-00	CARBON	5.6K	5%	1/6W	
R222	1-247-837-00	CARBON	1.8K	5%	1/6W	
R223	1-247-837-00	CARBON	1.8K	5%	1/6W	
R231	1-247-867-00	CARBON	33K	5%	1/6W	
R236	1-247-853-00	CARBON	8.2K	5%	1/6W	
R238	1-247-851-00	CARBON	6.8K	5%	1/6W	
R239	1-249-429-11	CARBON	10K	5%	1/6W	
R240	1-249-421-11	CARBON	2.2K	5%	1/6W	
R248	1-247-819-00	CARBON	330	5%	1/6W	
R274	1-247-883-00	CARBON	150K	5%	1/6W	
R275	1-249-437-11	CARBON	47K	5%	1/6W	
R276	1-247-849-00	CARBON	5.6K	5%	1/6W	
R277	1-249-429-11	CARBON	10K	5%	1/6W	
R280	1-249-419-11	CARBON	1.5K	5%	1/6W	
R281	1-247-890-00	CARBON	300K	5%	1/6W	
R282	1-247-819-00	CARBON	330	5%	1/6W	
R283	1-249-421-11	CARBON	2.2K	5%	1/6W	
R284	1-247-877-00	CARBON	82K	5%	1/6W	
R286	1-247-843-00	CARBON	3.3K	5%	1/6W	
R291	1-247-863-00	CARBON	22K	5%	1/6W	
R292	1-247-875-00	CARBON	68K	5%	1/6W	
R293	1-247-819-00	CARBON	330	5%	1/6W	
R295	1-249-421-11	CARBON	2.2K	5%	1/6W	
R298	1-247-894-00	CARBON	430K	5%	1/6W	
R299	1-247-892-00	CARBON	360K	5%	1/6W	
R301	1-249-429-11	CARBON	10K	5%	1/6W	
R302	1-247-819-00	CARBON	330	5%	1/6W	
R303	1-247-819-00	CARBON	330	5%	1/6W	
R304	1-247-847-00	CARBON	4.7K	5%	1/6W	
R312	1-247-879-00	CARBON	100K	5%	1/6W	
R313	1-247-823-00	CARBON	470	5%	1/6W	

Ref.No	Part No.	Description				Remark
R320	1-247-878-00	CARBON	91K	5%	1/6W	
R321	1-247-887-00	CARBON	220K	5%	1/6W	
R325	1-247-807-00	CARBON	100	5%	1/6W	
R331	1-247-852-00	CARBON	7.5K	5%	1/6W	
R342	1-247-807-00	CARBON	100	5%	1/6W	
R346	1-247-847-00	CARBON	4.7K	5%	1/6W	
R347	1-247-879-00	CARBON	100K	5%	1/6W	(E MODEL)
R351	1-247-815-00	CARBON	220	5%	1/6W	
R353	1-249-421-11	CARBON	2.2K	5%	1/6W	
R357	1-247-829-00	CARBON	820	5%	1/6W	
R370	1-247-797-00	CARBON	39	5%	1/6W	
R380	1-247-851-00	CARBON	6.8K	5%	1/6W	
R381	1-249-429-11	CARBON	10K	5%	1/6W	
R382	1-247-831-00	CARBON	1K	5%	1/6W	
R390	1-247-887-00	CARBON	220K	5%	1/6W	(E MODEL)
R401	1-247-810-00	CARBON	130	5%	1/6W	
R402	1-247-806-00	CARBON	91	5%	1/6W	
R403	1-247-867-00	CARBON	33K	5%	1/6W	
R404	1-249-437-11	CARBON	47K	5%	1/6W	
R405	1-247-831-00	CARBON	1K	5%	1/6W	
R406	1-247-832-00	CARBON	1.1K	5%	1/6W	
R407	1-247-832-00	CARBON	1.1K	5%	1/6W	
R408	1-247-849-00	CARBON	5.6K	5%	1/6W	
R409	1-247-831-00	CARBON	1K	5%	1/6W	
R413	1-247-829-00	CARBON	820	5%	1/6W	
R414	1-247-847-00	CARBON	4.7K	5%	1/6W	
R415	1-247-831-00	CARBON	1K	5%	1/6W	
R416	1-247-846-00	CARBON	4.3K	5%	1/6W	
R510	1-247-824-00	CARBON	510	5%	1/6W	
R511	1-247-867-00	CARBON	33K	5%	1/6W	
R512	1-247-847-00	CARBON	4.7K	5%	1/6W	
R513	1-247-863-00	CARBON	22K	5%	1/6W	
R514	1-247-821-00	CARBON	390	5%	1/6W	
R515	1-249-421-11	CARBON	2.2K	5%	1/6W	
R516	1-247-821-00	CARBON	390	5%	1/6W	
R517	1-247-821-00	CARBON	390	5%	1/6W	
R518	1-247-821-00	CARBON	390	5%	1/6W	
R519	1-247-821-00	CARBON	390	5%	1/6W	
R520	1-249-421-11	CARBON	2.2K	5%	1/6W	
R521	1-247-821-00	CARBON	390	5%	1/6W	
R522	1-249-421-11	CARBON	2.2K	5%	1/6W	
R525	1-247-843-00	CARBON	3.3K	5%	1/6W	
R603	1-247-843-00	CARBON	3.3K	5%	1/6W	
R607	1-249-429-11	CARBON	10K	5%	1/6W	(ES MODEL)
R638	1-247-807-00	CARBON	100	5%	1/6W	(ES MODEL)
R639	1-247-831-00	CARBON	1K	5%	1/6W	(ES MODEL)
R640	1-247-815-00	CARBON	220	5%	1/6W	(ES MODEL)
R641	1-247-823-00	CARBON	470	5%	1/6W	(ES MODEL)
R643	1-247-875-00	CARBON	68K	5%	1/6W	
R650	1-249-437-11	CARBON	47K	5%	1/6W	
R651	1-247-867-00	CARBON	33K	5%	1/6W	
R652	1-247-831-00	CARBON	1K	5%	1/6W	
R654	1-247-831-00	CARBON	1K	5%	1/6W	

When indicating parts by reference number, please include the board name.

YC-40

Ref.No	Part No.	Description				Remark
R655	1-247-831-00	CARBON	1K	5%	1/6W	
R656	1-249-414-11	CARBON	560	5%	1/6W	
R657	1-247-831-00	CARBON	1K	5%	1/6W	
R701	1-249-414-11	CARBON	560	5%	1/6W	
R702	1-249-421-11	CARBON	2.2K	5%	1/6W	
R703	1-247-867-00	CARBON	33K	5%	1/6W	
R704	1-247-813-00	CARBON	180	5%	1/6W	
R705	1-247-813-00	CARBON	180	5%	1/6W	
R710	1-249-429-11	CARBON	10K	5%	1/6W	
R712	1-249-419-11	CARBON	1.5K	5%	1/6W	
R714	1-247-827-00	CARBON	680	5%	1/6W	
R737	1-249-429-11	CARBON	10K	5%	1/6W	
R738	1-249-429-11	CARBON	10K	5%	1/6W	
R739	1-249-429-11	CARBON	10K	5%	1/6W	
R740	1-247-861-00	CARBON	18K	5%	1/6W	
R741	1-249-429-11	CARBON	10K	5%	1/6W	
R743	1-247-863-00	CARBON	22K	5%	1/6W	
R744	1-247-879-00	CARBON	100K	5%	1/6W	
R745	1-247-840-00	CARBON	2.4K	5%	1/6W	
R746	1-247-815-00	CARBON	220	5%	1/6W	
R747	1-247-857-00	CARBON	12K	5%	1/6W	
R748	1-249-421-11	CARBON	2.2K	5%	1/6W	
R749	1-247-815-00	CARBON	220	5%	1/6W	
R750	1-247-807-00	CARBON	100	5%	1/6W	
R753	1-249-429-11	CARBON	10K	5%	1/6W	
R754	1-249-421-11	CARBON	2.2K	5%	1/6W	
R778	1-247-861-00	CARBON	18K	5%	1/6W	
R802	1-247-831-00	CARBON	1K	5%	1/6W	
R803	1-249-437-11	CARBON	47K	5%	1/6W	
R804	1-249-437-11	CARBON	47K	5%	1/6W	
R805	1-247-883-00	CARBON	150K	5%	1/6W	
R806	1-247-883-00	CARBON	150K	5%	1/6W	
R807	1-247-829-00	CARBON	820	5%	1/6W	
R809	1-247-891-00	CARBON	330K	5%	1/6W(ES MODEL)	
R811	1-247-843-00	CARBON	3.3K	5%	1/6W	
R814	1-247-903-00	CARBON	1M	5%	1/6W	
R815	1-247-831-00	CARBON	1K	5%	1/6W	
R816	1-247-899-00	CARBON	680K	5%	1/6W	
R821	1-249-421-11	CARBON	2.2K	5%	1/6W(ES MODEL)	
R822	1-249-421-11	CARBON	2.2K	5%	1/6W(ES MODEL)	
R823	1-247-867-00	CARBON	33K	5%	1/6W	
R824	1-247-863-00	CARBON	22K	5%	1/6W	
R825	1-247-831-00	CARBON	1K	5%	1/6W	
R830	1-247-831-00	CARBON	1K	5%	1/6W	
R831	1-247-831-00	CARBON	1K	5%	1/6W	
R832	1-247-831-00	CARBON	1K	5%	1/6W	
R833	1-247-877-00	CARBON	82K	5%	1/6W	
R834	1-249-419-11	CARBON	1.5K	5%	1/6W	
R835	1-247-877-00	CARBON	82K	5%	1/6W	
R836	1-247-819-00	CARBON	330	5%	1/6W	
R837	1-247-819-00	CARBON	330	5%	1/6W	
R838	1-247-863-00	CARBON	22K	5%	1/6W	
R839	1-247-847-00	CARBON	4.7K	5%	1/6W	
R840	1-247-831-00	CARBON	1K	5%	1/6W	
R841	1-247-827-00	CARBON	680	5%	1/6W	
R843	1-247-827-00	CARBON	680	5%	1/6W	
R844	1-249-434-11	CARBON	27K	5%	1/6W	
R845	1-249-437-11	CARBON	47K	5%	1/6W	
R846	1-247-867-00	CARBON	33K	5%	1/6W	
R848	1-247-811-00	CARBON	150	5%	1/6W	
R849	1-247-803-00	CARBON	68	5%	1/6W	
R853	1-247-803-00	CARBON	68	5%	1/6W	
R854	1-247-804-00	CARBON	75	5%	1/6W	
R855	1-247-831-00	CARBON	1K	5%	1/6W	
R856	1-247-823-00	CARBON	470	5%	1/6W	
R867	1-247-853-00	CARBON	8.2K	5%	1/6W	
R870	1-247-818-00	CARBON	300	5%	1/6W	
R871	1-247-818-00	CARBON	300	5%	1/6W	
R872	1-249-414-11	CARBON	560	5%	1/6W	
R877	1-215-445-00	METAL	10K	1%	1/6W	
R878	1-215-433-00	METAL	3.3K	1%	1/6W	
R880	1-249-429-11	CARBON	10K	5%	1/6W	
R882	1-247-879-00	CARBON	100K	5%	1/6W	
R883 ⚠	1-247-807-00	CARBON	100	5%	1/6W	
R884	1-247-847-00	CARBON	4.7K	5%	1/6W	
R885	1-247-817-00	CARBON	270	5%	1/6W	
R886	1-247-833-00	CARBON	1.2K	5%	1/6W	
R888	1-247-863-00	CARBON	22K	5%	1/6W	
R892 ⚠	1-247-831-00	CARBON	1K	5%	1/6W	
R893	1-247-847-00	CARBON	4.7K	5%	1/6W	
R894	1-247-823-00	CARBON	470	5%	1/6W	
R895	1-247-823-00	CARBON	470	5%	1/6W	
R896	1-249-429-11	CARBON	10K	5%	1/6W	
R897	1-249-429-11	CARBON	10K	5%	1/6W	
R898	1-247-887-00	CARBON	220K	5%	1/6W	
R899	1-247-887-00	CARBON	220K	5%	1/6W	
R900	1-249-414-11	CARBON	560	5%	1/6W	
R902	1-247-857-00	CARBON	12K	5%	1/6W	
R903	1-247-801-00	CARBON	56	5%	1/6W	
R904	1-249-425-11	CARBON	4.7K	5%	1/6W	
R905	1-249-425-11	CARBON	4.7K	5%	1/6W	
R907	1-247-859-00	CARBON	15K	5%	1/6W	
R908	1-249-425-11	CARBON	4.7K	5%	1/6W	
R909	1-249-433-11	CARBON	22K	5%	1/6W	
R910	1-247-867-00	CARBON	33K	5%	1/6W	
R918	1-247-831-00	CARBON	1K	5%	1/6W	
R919 ⚠	1-212-857-00	FUSIBLE	10	5%	1/4W F	
R920	1-249-419-11	CARBON	1.5K	5%	1/6W	
R921	1-247-857-00	CARBON	12K	5%	1/6W	
R922	1-247-859-00	CARBON	15K	5%	1/6W	
R926	1-247-863-00	CARBON	22K	5%	1/6W	
R935	1-247-843-00	CARBON	3.3K	5%	1/6W	
R950	1-247-830-00	CARBON	910	5%	1/6W	
R963	1-249-429-11	CARBON	10K	5%	1/6W	
R964	1-247-858-00	CARBON	13K	5%	1/6W	
R965	1-247-857-00	CARBON	12K	5%	1/6W	

The components identified by shading and mark ⚠ are critical for safety. Replace only with part number specified.

When indicating parts by reference number, please include the board name.

Ref.No	Part No.	Description				Remark
R966	1-247-866-00	CARBON	30K	5%	1/6W	
R967	1-247-875-00	CARBON	68K	5%	1/6W	
R968	1-247-853-00	CARBON	8.2K	5%	1/6W	
R969	1-247-841-00	CARBON	2.7K	5%	1/6W	
R970	1-247-863-00	CARBON	22K	5%	1/6W	
R971	1-249-429-11	CARBON	10K	5%	1/6W	
R972	1-249-429-11	CARBON	10K	5%	1/6W	
R974	1-249-419-11	CARBON	1.5K	5%	1/6W	
R975	1-247-811-00	CARBON	150	5%	1/6W	
R976	1-247-809-00	CARBON	120	5%	1/6W	
R977	1-247-831-00	CARBON	1K	5%	1/6W	
R979	1-249-414-11	CARBON	560	5%	1/6W	
R980	1-247-867-00	CARBON	33K	5%	1/6W	
R981	1-247-853-00	CARBON	8.2K	5%	1/6W	
R982	1-247-853-00	CARBON	8.2K	5%	1/6W	
R983	1-247-792-00	CARBON	0	5%	1/6W	
R986	1-249-421-11	CARBON	2.2K	5%	1/6W	
R989	1-247-853-00	CARBON	8.2K	5%	1/6W	
R990	1-247-867-00	CARBON	33K	5%	1/6W	
R991	1-247-853-00	CARBON	8.2K	5%	1/6W	
R992	1-247-792-00	CARBON	0	5%	1/6W	
R995	1-247-803-00	CARBON	68	5%	1/6W	
R998	1-249-414-11	CARBON	560	5%	1/6W	

VARIABLE RESISTOR

RV001	1-228-989-00	RES, ADJ, METAL GLAZE 470	(ES MODEL)
RV002	1-228-994-00	RES, ADJ, CARBON 10K	
RV003	1-228-996-00	RES, ADJ, CARBON 47K	
RV004	1-228-990-00	RES, ADJ, METAL GLAZE 1K	
RV005	1-228-996-00	RES, ADJ, CARBON 47K	
RV006	1-228-995-00	RES, ADJ, CARBON 22K	
RV007	1-228-994-00	RES, ADJ, CARBON 10K	
RV008	1-228-991-00	RES, ADJ, CARBON 2.2K	
RV009	1-228-996-00	RES, ADJ, CARBON 47K	
RV010	1-228-995-00	RES, ADJ, CARBON 22K	
RV013	1-228-996-00	RES, ADJ, CARBON 47K	
RV014	1-228-994-00	RES, ADJ, CARBON 10K	
RV015	1-228-989-00	RES, ADJ, METAL GLAZE 470	
RV016	1-228-990-00	RES, ADJ, CARBON 1K	
RV019	1-228-993-00	RES, ADJ, METAL GLAZE 4.7K	
RV020	1-228-990-00	RES, ADJ, CARBON 1K	
RV021	1-228-996-00	RES, ADJ, CARBON 47K	
RV023	1-228-994-00	RES, ADJ, CARBON 10K	
RV024	1-228-996-00	RES, ADJ, CARBON 47K	
RV401	1-228-994-00	RES, ADJ, METAL GLAZE 10K	
RV501	1-228-989-00	RES, ADJ, CARBON 470	
RV702	1-228-995-00	RES, ADJ, CARBON 22K	

SWITCH

SW901	1-570-283-11	SWITCH, SLIDE

Ref.No	Part No.	Description	Remark

TRANSFORMER

T001	1-426-093-00	COIL, REC C BPT
T002	1-409-353-00	COIL, TRAP

CRYSTAL

X001	1-527-345-00	CRYSTAL, OSC

****

*A-6711-659-A RP-31 BOARD, COMPLETE
****

CAPACITOR

C703	1-161-013-00	CERAMIC	0.01MF	10%	25V
C704	1-123-647-00	ELECT	47MF	20%	6.3V
C705	1-131-345-00	TANTALUM	0.47MF	20%	35V
C706	1-130-495-00	MYLAR	0.1MF	5%	50V
C707	1-123-620-00	ELECT	10MF	20%	25V
C708	1-161-013-00	CERAMIC	0.01MF	10%	25V
C712	1-161-013-00	CERAMIC	0.01MF	10%	25V
C717	1-102-529-00	CERAMIC	100PF	5%	50V
C718	1-102-074-00	CERAMIC	0.001MF	10%	50V
C719	1-102-824-21	CERAMIC	470PF	5%	50V
C720	1-102-120-00	CERAMIC	0.0018MF	10%	50V
C721	1-102-518-00	CERAMIC	33PF	5%	50V
C722	1-102-516-00	CERAMIC	27PF	5%	50V
C723	1-123-822-00	ELECT	47MF	20%	10V
C724	1-123-620-00	ELECT	10MF	20%	25V
C725	1-130-495-00	MYLAR	0.1MF	5%	50V
C726	1-131-345-00	TANTALUM	0.47MF	20%	35V
C727	1-123-617-00	ELECT	10MF	20%	16V
C733	1-161-013-00	CERAMIC	0.01MF	10%	25V
C734	1-161-013-00	CERAMIC	0.01MF	10%	25V
C744	1-102-516-00	CERAMIC	27PF	5%	50V
C749	1-161-013-00	CERAMIC	0.01MF	10%	25V
C751	1-161-013-00	CERAMIC	0.01MF	10%	25V
C754	1-161-013-00	CERAMIC	0.01MF	10%	25V
C755	1-161-013-00	CERAMIC	0.01MF	10%	25V
C760	1-161-025-00	CERAMIC	0.1MF	10%	25V
C761	1-161-025-00	CERAMIC	0.1MF	10%	25V
C762	1-123-611-00	ELECT	1MF	20%	50V
C763	1-123-611-00	ELECT	1MF	20%	50V
C764	1-123-620-00	ELECT	10MF	20%	25V
C765	1-161-013-00	CERAMIC	0.01MF	10%	25V
C767	1-161-025-00	CERAMIC	0.1MF	10%	25V
C768	1-161-013-00	CERAMIC	0.01MF	10%	25V
C769	1-161-013-00	CERAMIC	0.01MF	10%	25V
C770	1-161-013-00	CERAMIC	0.01MF	10%	25V
C771	1-123-620-00	ELECT	10MF	20%	25V
C773	1-123-617-00	ELECT	10MF	20%	16V
C775	1-102-851-00	CERAMIC	15PF	5%	50V
C780	1-161-013-00	CERAMIC	0.01MF	10%	25V
C781	1-123-620-00	ELECT	10MF	20%	25V

When indicating parts by reference number, please include the board name.

RP-31

Ref.No	Part No.	Description				Remark
C782	1-161-013-00	CERAMIC	0.01MF	10%	25V	
C784	1-161-013-00	CERAMIC	0.01MF	10%	25V	
C791	1-161-013-00	CERAMIC	0.01MF	10%	25V	
C792	1-123-620-00	ELECT	10MF	20%	25V	
C801	1-123-822-00	ELECT	47MF	20%	10V	
C802	1-123-611-00	ELECT	1MF	20%	50V	
C803	1-161-013-00	CERAMIC	0.01MF	10%	25V	
C805	1-161-013-00	CERAMIC	0.01MF	10%	25V	
C807	1-102-865-00	CERAMIC	8PF	0.5PF	50V	
C808	1-102-978-00	CERAMIC	220PF	5%	50V	
C810	1-161-013-00	CERAMIC	0.01MF	10%	25V	
C811	1-161-013-00	CERAMIC	0.01MF	10%	25V	
C812	1-161-013-00	CERAMIC	0.01MF	10%	25V	
C813	1-161-013-00	CERAMIC	0.01MF	10%	25V	
C821	1-123-617-00	ELECT	10MF	20%	16V	
C831	1-161-059-00	CERAMIC	0.047MF	10%	25V	
C832	1-102-513-00	CERAMIC	18PF	5%	50V	
C833	1-102-513-00	CERAMIC	18PF	5%	50V	
C841	1-161-059-00	CERAMIC	0.047MF	10%	25V	
C842	1-161-059-00	CERAMIC	0.047MF	10%	25V	
C843	1-102-973-00	CERAMIC	100PF	5%	50V	
		CONNECTOR				
CN701	*1-560-900-00	PIN, CONNECTOR 12P				
CN702	*1-560-894-00	PIN, CONNECTOR 6P				
CN703	*1-564-030-00	PIN, CONNECTOR 5P				
CN704	*1-560-900-00	PIN, CONNECTOR 12P				
		DIODE				
D701	8-719-911-19	DIODE 1SS119				
D702	8-719-911-19	DIODE 1SS119				
		IC				
IC701	8-752-004-50	IC CX20045				
IC703	8-759-103-17	IC UPC1521HA				
IC704	8-752-006-10	IC CX20061				
IC705	8-759-200-60	IC TA7060AP				
		COIL				
L701	1-408-876-00	MICRO INDUCTOR 0.18UH				
L702	1-408-621-00	MICRO INDUCTOR 330UH				
L703	1-408-429-00	MICRO INDUCTOR 470UH				
L706	1-408-421-00	MICRO INDUCTOR 100UH				
L709	1-408-616-21	MICRO INDUCTOR 120UH				
L711	1-408-411-00	MICRO INDUCTOR 15UH				
L712	1-408-878-00	MICRO INDUCTOR 0.33UH				
L714	1-408-621-00	MICRO INDUCTOR 330UH				
L716	1-408-429-00	MICRO INDUCTOR 470UH				
L720	1-408-411-00	MICRO INDUCTOR 15UH				
L721	1-408-429-00	MICRO INDUCTOR 470UH				
L761	1-408-429-00	MICRO INDUCTOR 470UH				
L762	1-408-429-00	MICRO INDUCTOR 470UH				
L763	1-408-410-00	MICRO INDUCTOR 12UH				

Ref.No	Part No.	Description				Remark
L764	1-408-429-00	MICRO INDUCTOR 470UH				
L771	1-408-429-00	MICRO INDUCTOR 470UH				
L772	1-408-403-00	MICRO INDUCTOR 3.3UH				
L773	1-408-402-00	MICRO INDUCTOR 2.7UH				
L774	1-408-429-00	MICRO INDUCTOR 470UH				
L775	1-410-162-11	MICRO INDUCTOR 470UH				
L801	1-408-415-00	MICRO INDUCTOR 33UH				
L802	1-408-412-00	MICRO INDUCTOR 18UH				
		TRANSISTOR				
Q703	8-729-245-83	TRANSISTOR 2SC2458				
Q704	8-729-245-83	TRANSISTOR 2SC2458				
Q705	8-729-245-83	TRANSISTOR 2SC2458				
Q706	8-729-245-83	TRANSISTOR 2SC2458				
Q707	8-729-603-30	TRANSISTOR 2SC403SP				
Q761	8-729-245-83	TRANSISTOR 2SC2458				
		RESISTOR				
R534	1-247-833-00	CARBON	1.2K	5%	1/6W	
R701	1-247-831-00	CARBON	1K	5%	1/6W	
R704	1-247-857-00	CARBON	12K	5%	1/6W	
R709	1-247-831-00	CARBON	1K	5%	1/6W	
R712	1-247-831-00	CARBON	1K	5%	1/6W	
R713	1-247-831-00	CARBON	1K	5%	1/6W	
R717	1-249-419-11	CARBON	1.5K	5%	1/6W	
R720	1-247-833-00	CARBON	1.2K	5%	1/6W	
R722	1-247-829-00	CARBON	820	5%	1/6W	
R745	1-247-807-00	CARBON	100	5%	1/6W	
R748	1-249-419-11	CARBON	1.5K	5%	1/6W	
R749	1-249-419-11	CARBON	1.5K	5%	1/6W	
R752	1-249-429-11	CARBON	10K	5%	1/6W	
R753	1-249-421-11	CARBON	2.2K	5%	1/6W	
R754	1-247-815-00	CARBON	220	5%	1/6W	
R755	1-247-849-00	CARBON	5.6K	5%	1/6W	
R756	1-247-870-00	CARBON	43K	5%	1/6W	
R757	1-249-429-11	CARBON	10K	5%	1/6W	
R761	1-247-849-00	CARBON	5.6K	5%	1/6W	
R762	1-247-870-00	CARBON	43K	5%	1/6W	
R763	1-249-419-11	CARBON	1.5K	5%	1/6W	
R764	1-247-833-00	CARBON	1.2K	5%	1/6W	
R765	1-247-831-00	CARBON	1K	5%	1/6W	
R771	1-247-819-00	CARBON	330	5%	1/6W	
R772	1-247-821-00	CARBON	390	5%	1/6W	
R801	1-247-797-00	CARBON	39	5%	1/6W	
R803	1-247-823-00	CARBON	470	5%	1/6W	
R806	1-247-845-00	CARBON	3.9K	5%	1/6W	
R809	1-247-863-00	CARBON	22K	5%	1/6W	
R810	1-247-863-00	CARBON	22K	5%	1/6W	
R811	1-247-827-00	CARBON	680	5%	1/6W	
R812	1-247-829-00	CARBON	820	5%	1/6W	
R814	1-249-421-11	CARBON	2.2K	5%	1/6W	
R815	1-249-421-11	CARBON	2.2K	5%	1/6W	
R816	1-247-831-00	CARBON	1K	5%	1/6W	

When indicating parts by reference number, please include the board name.

Ref.No	Part No.	Description				Remark
R817	1-247-831-00	CARBON	1K	5%	1/6W	
R841	1-247-797-00	CARBON	39	5%	1/6W	
R842	1-247-823-00	CARBON	470	5%	1/6W	
R843	1-247-831-00	CARBON	1K	5%	1/6W	
		VARIABLE RESISTOR				
RV701	1-228-920-00	RES, ADJ, CARBON 2.2K				
RV702	1-228-920-00	RES, ADJ, CARBON 2.2K				
RV704	1-228-920-00	RES, ADJ, CARBON 2.2K				
RV706	1-228-919-00	RES, ADJ, CARBON 1K				
		TRANSFORMER				
T701	1-448-300-11	TRANSFORMER, STEP UP				
**********						
	*A-6711-660-A	DH-4 BOARD, COMPLETE **********				
	*3-683-631-01	CLAMP				
		CAPACITOR				
C320	1-161-013-00	CERAMIC	0.01MF	10%	25V	
C321	1-123-620-00	ELECT	10MF	20%	25V	
C322	1-161-059-00	CERAMIC	0.047MF	10%	25V	
C323	1-123-620-00	ELECT	10MF	20%	25V	
C324	1-123-611-00	ELECT	1MF	20%	50V	
C325	1-123-619-00	ELECT	4.7MF	20%	50V	
C326	1-161-059-00	CERAMIC	0.047MF	10%	25V	
C327	1-161-059-00	CERAMIC	0.047MF	10%	25V	
C328	1-123-611-00	ELECT	1MF	20%	50V	
C330	1-123-620-00	ELECT	10MF	20%	25V	
C331	1-123-622-00	ELECT	22MF	20%	16V	
C332	1-161-059-00	CERAMIC	0.047MF	10%	25V	
C333	1-161-059-00	CERAMIC	0.047MF	10%	25V	
C334	1-102-978-00	CERAMIC	220PF	5%	50V	
C360	1-123-620-00	ELECT	10MF	20%	25V	
C372	1-123-620-00	ELECT	10MF	20%	25V	
C373	1-161-013-00	CERAMIC	0.01MF	10%	25V	
C375	1-102-530-00	CERAMIC	120PF	5%	50V	
C501	1-161-025-00	CERAMIC	0.1MF	10%	25V	
C502	1-161-013-00	CERAMIC	0.01MF	10%	25V	
C503	1-102-515-00	CERAMIC	24PF	5%	50V	
C505	1-161-025-00	CERAMIC	0.1MF	10%	25V	
C506	1-161-025-00	CERAMIC	0.1MF	10%	25V	
C507	1-161-025-00	CERAMIC	0.1MF	10%	25V	
C508	1-161-013-00	CERAMIC	0.01MF	10%	25V	
C509	1-123-620-00	ELECT	10MF	20%	25V	
C510	1-123-620-00	ELECT	10MF	20%	25V	
C511	1-161-013-00	CERAMIC	0.01MF	10%	25V	
C513	1-161-025-00	CERAMIC	0.1MF	10%	25V	
C514	1-161-013-00	CERAMIC	0.01MF	10%	25V	
C515	1-123-620-00	ELECT	10MF	20%	25V	
C520	1-161-013-00	CERAMIC	0.01MF	10%	25V	

Ref.No	Part No.	Description				Remark
C521	1-102-947-00	CERAMIC	10PF	5%	50V	
C522	1-161-013-00	CERAMIC	0.01MF	10%	25V	
C601	1-123-822-00	ELECT	47MF	20%	10V	
C602	1-123-822-00	ELECT	47MF	20%	10V	
C603	1-123-619-00	ELECT	4.7MF	20%	50V	
C604	1-123-619-00	ELECT	4.7MF	20%	50V	
C605	1-123-611-00	ELECT	1MF	20%	50V	
C606	1-123-611-00	ELECT	1MF	20%	50V	
C607	1-123-620-00	ELECT	10MF	20%	25V	
C608	1-123-333-00	ELECT	100MF	20%	16V	
C609	1-102-973-00	CERAMIC	100PF	5%	50V	
C610	1-102-973-00	CERAMIC	100PF	5%	50V	
C611	1-123-620-00	ELECT	10MF	20%	25V	
C612	1-161-025-00	CERAMIC	0.1MF	10%	25V	
C729	1-102-518-00	CERAMIC	33PF	5%	50V	
C746	1-161-013-00	CERAMIC	0.01MF	10%	25V	
C747	1-161-059-00	CERAMIC	0.047MF	10%	25V	
C748	1-161-013-00	CERAMIC	0.01MF	10%	25V	
C801	1-123-608-00	ELECT	0.22MF	20%	50V	
C802	1-123-620-00	ELECT	10MF	20%	25V	
C803	1-161-013-00	CERAMIC	0.01MF	10%	25V	
C804	1-123-333-00	ELECT	100MF	20%	16V	
C805	1-102-961-00	CERAMIC	27PF	5%	50V	
C806	1-123-619-00	ELECT	4.7MF	20%	50V	
C811	1-102-510-00	CERAMIC	12PF	5%	50V	
		CONNECTOR				
CN501	*1-564-035-11	PIN, CONNECTOR 10P				
CN504	*1-564-031-00	PIN, CONNECTOR 6P				
CN505	*1-560-895-00	PIN, CONNECTOR 7P				
CN506	*1-560-891-00	PIN, CONNECTOR 3P				
CN507	*1-560-890-00	PIN, CONNECTOR 2P				
CN508	*1-564-031-00	PIN, CONNECTOR 6P				
CN509	*1-564-028-00	PIN, CONNECTOR 3P				
CN510	*1-560-891-00	PIN, CONNECTOR 3P				
		DIODE				
D310	8-719-911-19	DIODE 1SS119				
D312	8-719-911-19	DIODE 1SS119				
D313	8-719-911-19	DIODE 1SS119				
D501	8-719-911-19	DIODE 1SS119				
D601	8-719-911-19	DIODE 1SS119				
D602	8-719-911-19	DIODE 1SS119				
D603	8-719-911-19	DIODE 1SS119				
D801	8-719-168-07	DIODE RD6.8E-B				
		IC				
IC501	8-759-145-58	IC UPC4558C				
IC601	8-759-745-56	IC NJM4556D				
		COIL				
L301	1-407-510-00	MICRO INDUCTOR 33MMH				
L302	1-408-429-00	MICRO INDUCTOR 470UH				

When indicating parts by reference number, please include the board name.

DH-4

Ref.No	Part No.	Description	Remark
L303	1-408-429-00	MICRO INDUCTOR 470UH	
L304	1-408-417-00	MICRO INDUCTOR 47UH	
L503	1-408-415-00	MICRO INDUCTOR 33UH	
L504	1-408-420-00	MICRO INDUCTOR 82UH	
L510	1-408-411-00	MICRO INDUCTOR 15UH	
L715	1-408-408-00	MICRO INDUCTOR 8.2UH	
L765	1-408-429-00	MICRO INDUCTOR 470UH	
		TRANSISTOR	
Q301	8-729-603-30	TRANSISTOR 2SC403SP	
Q302	8-729-245-83	TRANSISTOR 2SC2458	
Q303	8-729-245-83	TRANSISTOR 2SC2458	
Q304	8-729-245-83	TRANSISTOR 2SC2458	
Q305	8-729-245-83	TRANSISTOR 2SC2458	
Q306	8-729-245-83	TRANSISTOR 2SC2458	
Q307	8-729-204-83	TRANSISTOR 2SA1048	
Q308	8-729-204-83	TRANSISTOR 2SA1048	
Q309	8-729-245-83	TRANSISTOR 2SC2458	
Q310	8-729-245-83	TRANSISTOR 2SC2458	
Q311	8-729-900-80	TRANSISTOR DTC114ES	
Q312	8-729-900-89	TRANSISTOR DTC144ES	
Q502	8-729-603-30	TRANSISTOR 2SC403SP	
Q503	8-729-603-30	TRANSISTOR 2SC403SP	
Q504	8-729-245-83	TRANSISTOR 2SC2458	
Q505	8-729-245-83	TRANSISTOR 2SC2458	
Q506	8-729-204-83	TRANSISTOR 2SA1048	
Q507	8-729-204-83	TRANSISTOR 2SA1048	
Q508	8-729-245-83	TRANSISTOR 2SC2458	
Q509	8-729-245-83	TRANSISTOR 2SC2458	
Q510	8-729-245-83	TRANSISTOR 2SC2458	
Q511	8-729-245-83	TRANSISTOR 2SC2458	
Q512	8-729-245-83	TRANSISTOR 2SC2458	
Q513	8-729-900-36	TRANSISTOR DTC124ES	
Q514	8-729-245-83	TRANSISTOR 2SC2458	
Q601	8-729-245-83	TRANSISTOR 2SC2458	
Q602	8-729-245-83	TRANSISTOR 2SC2458	
Q706	8-729-245-83	TRANSISTOR 2SC2458	
Q801	8-729-245-83	TRANSISTOR 2SC2458	
Q802	8-729-245-83	TRANSISTOR 2SC2458	
		RESISTOR	
R330	1-247-841-00	CARBON 2.7K 5% 1/6W	
R331	1-247-861-00	CARBON 18K 5% 1/6W	
R332	1-247-867-00	CARBON 33K 5% 1/6W	
R333	1-249-429-11	CARBON 10K 5% 1/6W	
R334	1-247-841-00	CARBON 2.7K 5% 1/6W	
R335	1-249-437-11	CARBON 47K 5% 1/6W	
R336	1-249-434-11	CARBON 27K 5% 1/6W	
R337	1-247-831-00	CARBON 1K 5% 1/6W	
R338	1-247-829-00	CARBON 820 5% 1/6W	
R339	1-247-831-00	CARBON 1K 5% 1/6W	
R340	1-215-413-00	METAL 470 1% 1/6W	
R341	1-215-433-00	METAL 3.3K 1% 1/6W	

Ref.No	Part No.	Description	Remark
R342	1-215-405-00	METAL 220 1% 1/6W	
R343	1-215-433-00	METAL 3.3K 1% 1/6W	
R344	1-215-451-00	METAL 18K 1% 1/6W	
R345	1-249-429-11	CARBON 10K 5% 1/6W	
R346	1-249-429-11	CARBON 10K 5% 1/6W	
R347	1-247-831-00	CARBON 1K 5% 1/6W	
R348	1-247-815-00	CARBON 220 5% 1/6W	
R349	1-249-429-11	CARBON 10K 5% 1/6W	
R350	1-249-429-11	CARBON 10K 5% 1/6W	
R351	1-247-895-00	CARBON 470K 5% 1/6W	
R354	1-247-879-00	CARBON 100K 5% 1/6W	
R357	1-247-857-00	CARBON 12K 5% 1/6W	
R358	1-247-831-00	CARBON 1K 5% 1/6W	
R361	1-247-807-00	CARBON 100 5% 1/6W	
R364	1-247-811-00	CARBON 150 5% 1/6W	
R365	1-249-429-11	CARBON 10K 5% 1/6W	
R366	1-249-429-11	CARBON 10K 5% 1/6W	
R367	1-249-421-11	CARBON 2.2K 5% 1/6W	
R368	1-247-831-00	CARBON 1K 5% 1/6W	
R369	1-249-429-11	CARBON 10K 5% 1/6W	
R371	1-247-831-00	CARBON 1K 5% 1/6W	
R501	1-249-434-11	CARBON 27K 5% 1/6W	
R502	1-247-859-00	CARBON 15K 5% 1/6W	
R503	1-247-831-00	CARBON 1K 5% 1/6W	
R505	1-247-823-00	CARBON 470 5% 1/6W	
R507	1-247-831-00	CARBON 1K 5% 1/6W	
R509	1-247-809-00	CARBON 120 5% 1/6W	
R510	1-247-831-00	CARBON 1K 5% 1/6W	
R511	1-247-809-00	CARBON 120 5% 1/6W	
R513	1-247-819-00	CARBON 330 5% 1/6W	
R514	1-247-831-00	CARBON 1K 5% 1/6W	
R515	1-247-819-00	CARBON 330 5% 1/6W	
R516	1-247-807-00	CARBON 100 5% 1/6W	
R519	1-247-799-00	CARBON 47 5% 1/6W	
R520	1-247-831-00	CARBON 1K 5% 1/6W	
R521	1-247-799-00	CARBON 47 5% 1/6W	
R522	1-247-863-00	CARBON 22K 5% 1/6W	
R523	1-215-445-00	METAL 10K 1% 1/6W	
R524	1-215-445-00	METAL 10K 1% 1/6W	
R525	1-215-445-00	METAL 10K 1% 1/6W	
R526	1-247-831-00	CARBON 1K 5% 1/6W	
R527	1-215-445-00	METAL 10K 1% 1/6W	
R528	1-247-889-00	CARBON 270K 5% 1/6W	
R529	1-215-469-00	METAL 100K 1% 1/6W	
R530	1-247-807-00	CARBON 100 5% 1/6W	
R531	1-247-807-00	CARBON 100 5% 1/6W	
R532	1-249-429-11	CARBON 10K 5% 1/6W	
R533	1-249-429-11	CARBON 10K 5% 1/6W	
R535	1-249-434-11	CARBON 27K 5% 1/6W	
R536	1-247-843-00	CARBON 3.3K 5% 1/6W	
R537	1-247-863-00	CARBON 22K 5% 1/6W	
R538	1-247-863-00	CARBON 22K 5% 1/6W	
R539	1-247-863-00	CARBON 22K 5% 1/6W	

When indicating parts by reference number, please include the board name.

Ref.No	Part No.	Description				Remark
R562	1-247-811-00	CARBON	150	5%	1/6W	
R563	1-249-421-11	CARBON	2.2K	5%	1/6W	
R564	1-215-429-00	METAL	2.2K	1%	1/6W	
R601	1-247-799-00	CARBON	47	5%	1/6W	
R602	1-249-429-11	CARBON	10K	5%	1/6W	
R603	1-247-799-00	CARBON	47	5%	1/6W	
R604	1-247-867-00	CARBON	33K	5%	1/6W	
R605	1-247-867-00	CARBON	33K	5%	1/6W	
R606	1-247-877-00	CARBON	82K	5%	1/6W	
R607	1-247-887-00	CARBON	220K	5%	1/6W	
R608	1-247-877-00	CARBON	82K	5%	1/6W	
R609	1-249-429-11	CARBON	10K	5%	1/6W	
R611	1-247-887-00	CARBON	220K	5%	1/6W	
R612	1-247-887-00	CARBON	220K	5%	1/6W	
R613	1-249-429-11	CARBON	10K	5%	1/6W	
R614	1-247-863-00	CARBON	22K	5%	1/6W	
R680	1-247-887-00	CARBON	220K	5%	1/6W	
R724	1-247-817-00	CARBON	270	5%	1/6W	
R725	1-247-817-00	CARBON	270	5%	1/6W	
R728	1-249-414-11	CARBON	560	5%	1/6W	
R750	1-247-823-00	CARBON	470	5%	1/6W	
R752	1-247-858-00	CARBON	13K	5%	1/6W	
R753	1-247-823-00	CARBON	470	5%	1/6W	
R801	1-249-421-11	CARBON	2.2K	5%	1/6W	
R802	1-247-815-00	CARBON	220	5%	1/6W	
R803	1-247-847-00	CARBON	4.7K	5%	1/6W	
R804	1-247-887-00	CARBON	220K	5%	1/6W	
R805	1-247-879-00	CARBON	100K	5%	1/6W	
R806	1-247-831-00	CARBON	1K	5%	1/6W	
R807	1-247-823-00	CARBON	470	5%	1/6W	
R808	1-249-421-11	CARBON	2.2K	5%	1/6W	
R809	1-247-823-00	CARBON	470	5%	1/6W	

VARIABLE RESISTOR

RV301	1-228-990-00	RES, ADJ, CARBON 1K
RV302	1-228-991-00	RES, ADJ, CARBON 2.2K
RV303	1-228-989-00	RES, ADJ, CARBON 470
RV501	1-228-991-00	RES, ADJ, METAL GLAZE 2.2K

****

AF-14 BOARD
****

*A-6713-237-A B-697 BOARD, COMPLETE
****

*3-683-631-01 CLAMP
*3-684-072-01 LID, BOTTOM, AF SHIELD CASE(S)
*3-684-087-01 CASE (S) (MAIN), SHIELD, AF

B.P.F

BPF001	1-235-367-11	B.P.F
BPF002	1-235-367-11	B.P.F
BPF003	1-235-366-11	B.P.F
BPF004	1-235-366-11	B.P.F

CAPACITOR

Ref.No	Part No.	Description				Remark
C001	1-123-318-00	ELECT	33MF	20%	16V	
C002	1-161-025-00	CERAMIC	0.1MF	10%	25V	
C003	1-161-025-00	CERAMIC	0.1MF	10%	25V	
C004	1-161-025-00	CERAMIC	0.1MF	10%	25V	
C005	1-101-004-00	CERAMIC	0.01MF		50V	
C007	1-102-518-00	CERAMIC	33PF	5%	50V	
C008	1-102-518-00	CERAMIC	33PF	5%	50V	
C009	1-123-318-00	ELECT	33MF	20%	16V	
C010	1-161-025-00	CERAMIC	0.1MF	10%	25V	
C011	1-161-025-00	CERAMIC	0.1MF	10%	25V	
C012	1-161-025-00	CERAMIC	0.1MF	10%	25V	
C013	1-101-004-00	CERAMIC	0.01MF		50V	
C015	1-102-822-00	CERAMIC	390PF	5%	50V	
C016	1-102-822-00	CERAMIC	390PF	5%	50V	
C017	1-123-380-00	ELECT	1MF	20%	50V	
C018	1-101-361-00	CERAMIC	150PF	10%	50V	
C019	1-123-380-00	ELECT	1MF	20%	50V	
C020	1-161-025-00	CERAMIC	0.1MF	10%	25V	
C021	1-101-004-00	CERAMIC	0.01MF		50V	
C022	1-123-332-00	ELECT	47MF	20%	16V	
C023	1-161-025-00	CERAMIC	0.1MF	10%	25V	
C025	1-102-978-00	CERAMIC	220PF	5%	50V	
C026	1-102-978-00	CERAMIC	220PF	5%	50V	
C027	1-102-522-00	CERAMIC	51PF	5%	50V	
C028	1-102-531-00	CERAMIC	150PF	5%	50V	
C029	1-102-531-00	CERAMIC	150PF	5%	50V	
C030	1-102-520-00	CERAMIC	39PF	5%	50V	
C031	1-123-356-00	ELECT	10MF	20%	16V	
C033	1-101-004-00	CERAMIC	0.01MF		50V	
C034	1-101-004-00	CERAMIC	0.01MF		50V	
C035	1-123-382-00	ELECT	3.3MF	20%	50V	
C036	1-123-382-00	ELECT	3.3MF	20%	50V	
C037	1-101-004-00	CERAMIC	0.01MF		50V	
C038	1-123-332-00	ELECT	47MF	20%	16V	
C039	1-101-004-00	CERAMIC	0.01MF		50V	
C040	1-101-004-00	CERAMIC	0.01MF		50V	
C041	1-101-004-00	CERAMIC	0.01MF		50V	
C042	1-101-004-00	CERAMIC	0.01MF		50V	
C043	1-123-356-00	ELECT	10MF	20%	16V	
C044	1-101-004-00	CERAMIC	0.01MF		50V	
C045	1-101-004-00	CERAMIC	0.01MF		50V	
C046	1-101-004-00	CERAMIC	0.01MF		50V	
C047	1-123-356-00	ELECT	10MF	20%	16V	
C048	1-123-356-00	ELECT	10MF	20%	16V	
C049	1-123-356-00	ELECT	10MF	20%	16V	
C050	1-123-318-00	ELECT	33MF	20%	16V	
C051	1-123-318-00	ELECT	33MF	20%	16V	
C052	1-123-356-00	ELECT	10MF	20%	16V	
C053	1-123-356-00	ELECT	10MF	20%	16V	
C054	1-101-004-00	CERAMIC	0.01MF		50V	

When indicating parts by reference number, please include the board name.

AF-14

Ref.No	Part No.	Description			Remark
C055	1-123-332-00	ELECT	47MF	20%	16V
C056	1-101-004-00	CERAMIC	0.01MF		50V
C057	1-101-004-00	CERAMIC	0.01MF		50V
C058	1-161-025-00	CERAMIC	0.1MF	10%	25V
C059	1-123-356-00	ELECT	10MF	20%	16V
C060	1-123-356-00	ELECT	10MF	20%	16V
C061	1-123-330-00	ELECT	22MF	20%	16V
C062	1-130-475-00	MYLAR	0.0022MF	5%	50V
C063	1-130-482-00	MYLAR	0.0082MF	5%	50V
C064	1-102-824-21	CERAMIC	470PF	5%	50V
C065	1-130-477-00	MYLAR	0.0033MF	5%	50V
C066	1-123-369-00	ELECT	4.7MF	20%	50V
C067	1-123-369-00	ELECT	4.7MF	20%	50V
C068	1-101-004-00	CERAMIC	0.01MF		50V
C069	1-123-333-00	ELECT	100MF	20%	16V
C070	1-123-356-00	ELECT	10MF	20%	16V
C071	1-123-332-00	ELECT	47MF	20%	16V
C072	1-123-332-00	ELECT	47MF	20%	16V
C073	1-102-958-00	CERAMIC	20PF	5%	50V
C074	1-130-485-00	MYLAR	0.015MF	5%	50V
C075	1-102-936-00	CERAMIC	3PF	0.25PF	50V
C076	1-130-485-00	MYLAR	0.015MF	5%	50V
C077	1-130-498-00	MYLAR	0.18MF	5%	50V
C078	1-130-485-00	MYLAR	0.015MF	5%	50V
C079	1-130-469-00	MYLAR	680PF	5%	50V
C080	1-130-475-00	MYLAR	0.0022MF	5%	50V
C081	1-102-936-00	CERAMIC	3PF	0.25PF	50V
C082	1-130-491-00	MYLAR	0.047MF	5%	50V
C083	1-123-330-00	ELECT	22MF	20%	16V
C084	1-130-493-00	MYLAR	0.068MF	5%	50V
C085	1-131-371-00	TANTALUM	10MF	10%	16V
C086	1-131-347-00	TANTALUM	1MF	10%	25V
C087	1-101-004-00	CERAMIC	0.01MF		50V
C088	1-123-333-00	ELECT	100MF	20%	16V
C096	1-123-356-00	ELECT	10MF	20%	16V
C100	1-123-356-00	ELECT	10MF	20%	16V
C101	1-123-332-00	ELECT	47MF	20%	16V
C102	1-123-332-00	ELECT	47MF	20%	16V
C103	1-123-381-00	ELECT	2.2MF	20%	50V
C104	1-123-332-00	ELECT	47MF	20%	16V
C105	1-123-356-00	ELECT	10MF	20%	16V
C106	1-123-356-00	ELECT	10MF	20%	16V
C107	1-123-332-00	ELECT	47MF	20%	16V
C108	1-123-356-00	ELECT	10MF	20%	16V
C109	1-123-356-00	ELECT	10MF	20%	16V
C110	1-123-380-00	ELECT	1MF	20%	50V
C111	1-123-318-00	ELECT	33MF	20%	16V
C112	1-123-379-00	ELECT	0.47MF	20%	50V
C113	1-123-356-00	ELECT	10MF	20%	16V
C114	1-123-356-00	ELECT	10MF	20%	16V
C115	1-123-369-00	ELECT	4.7MF	20%	50V
C116	1-123-330-00	ELECT	22MF	20%	16V
C117	1-123-330-00	ELECT	22MF	20%	16V

Ref.No	Part No.	Description			Remark
C118	1-102-961-00	CERAMIC	27PF	10%	50V
C119	1-102-961-00	CERAMIC	27PF	10%	50V
C120	1-123-369-00	ELECT	4.7MF	20%	50V
C121	1-123-356-00	ELECT	10MF	20%	16V
C122	1-123-356-00	ELECT	10MF	20%	16V
C123	1-130-471-00	MYLAR	0.001MF	5%	50V
C124	1-130-471-00	MYLAR	0.001MF	5%	50V
C125	1-123-356-00	ELECT	10MF	20%	16V
C126	1-123-356-00	ELECT	10MF	20%	16V
C127	1-123-356-00	ELECT	10MF	20%	16V
C128	1-123-356-00	ELECT	10MF	20%	16V
C129	1-123-356-00	ELECT	10MF	20%	16V
C130	1-123-356-00	ELECT	10MF	20%	16V
C131	1-123-356-00	ELECT	10MF	20%	16V
C132	1-123-356-00	ELECT	10MF	20%	16V
C133	1-123-356-00	ELECT	10MF	20%	16V
C134	1-123-330-00	ELECT	22MF	20%	16V
C135	1-123-332-00	ELECT	47MF	20%	16V
C136	1-123-330-00	ELECT	22MF	20%	16V
C137	1-123-356-00	ELECT	10MF	20%	16V
C138	1-123-356-00	ELECT	10MF	20%	16V
C139	1-123-330-00	ELECT	22MF	20%	16V
C140	1-123-356-00	ELECT	10MF	20%	16V
C141	1-123-356-00	ELECT	10MF	20%	16V
C142	1-123-332-00	ELECT	47MF	20%	16V
C143	1-123-330-00	ELECT	22MF	20%	16V
C144	1-123-330-00	ELECT	22MF	20%	16V
C145	1-123-356-00	ELECT	10MF	20%	16V
C146	1-123-330-00	ELECT	22MF	20%	16V
C147	1-123-330-00	ELECT	22MF	20%	16V
C148	1-123-356-00	ELECT	10MF	20%	16V
C149	1-123-356-00	ELECT	10MF	20%	16V
C150	1-123-356-00	ELECT	10MF	20%	16V
C151	1-130-478-00	MYLAR	0.0039MF	5%	50V
C152	1-130-476-00	MYLAR	0.0027MF	5%	50V
C153	1-130-474-00	MYLAR	0.0018MF	5%	50V
C154	1-130-478-00	MYLAR	0.0039MF	5%	50V
C155	1-130-476-00	MYLAR	0.0027MF	5%	50V
C156	1-130-474-00	MYLAR	0.0018MF	5%	50V
C157	1-131-347-00	TANTALUM	1MF	10%	25V
C158	1-131-371-00	TANTALUM	10MF	10%	16V
C159	1-130-493-00	MYLAR	0.068MF	5%	50V
C160	1-123-330-00	ELECT	22MF	20%	16V
C161	1-130-491-00	MYLAR	0.047MF	5%	50V
C162	1-102-936-00	CERAMIC	3PF	0.25PF	50V
C163	1-130-475-00	MYLAR	0.0022MF	5%	50V
C164	1-130-469-00	MYLAR	680PF	5%	50V
C165	1-130-485-00	MYLAR	0.015MF	5%	50V
C166	1-130-498-00	MYLAR	0.18MF	5%	50V
C167	1-130-485-00	MYLAR	0.015MF	5%	50V
C168	1-130-485-00	MYLAR	0.015MF	5%	50V
C169	1-102-958-00	CERAMIC	20PF	5%	50V
C170	1-123-332-00	ELECT	47MF	20%	16V

When indicating parts by reference number, please include the board name.

Ref.No	Part No.	Description			Remark
C171	1-123-332-00	ELECT	47MF	20%	16V
C172	1-123-356-00	ELECT	10MF	20%	16V
C173	1-101-004-00	CERAMIC	0.01MF		50V
C174	1-123-333-00	ELECT	100MF	20%	16V
C175	1-101-004-00	CERAMIC	0.01MF		50V
C176	1-101-004-00	CERAMIC	0.01MF		50V
C177	1-123-356-00	ELECT	10MF	20%	16V
C178	1-123-356-00	ELECT	10MF	20%	16V
C179	1-123-356-00	ELECT	10MF	20%	16V
C180	1-123-318-00	ELECT	33MF	20%	16V
C181	1-123-318-00	ELECT	33MF	20%	16V
C182	1-123-356-00	ELECT	10MF	20%	16V
C183	1-123-356-00	ELECT	10MF	20%	16V
C184	1-123-381-00	ELECT	2.2MF	20%	50V
C185	1-123-380-00	ELECT	1MF	20%	50V
C186	1-123-380-00	ELECT	1MF	20%	50V
C187	1-101-004-00	CERAMIC	0.01MF		50V
C188	1-123-332-00	ELECT	47MF	20%	16V
C189	1-123-369-00	ELECT	4.7MF	20%	50V
C190	1-123-369-00	ELECT	4.7MF	20%	50V
C191	1-130-477-00	MYLAR	0.0033MF	5%	50V
C192	1-130-482-00	MYLAR	0.0082MF	5%	50V
C193	1-102-824-21	CERAMIC	470PF	5%	50V
C194	1-130-475-00	MYLAR	0.0022MF	5%	50V
C195	1-123-330-00	ELECT	22MF	20%	16V
C196	1-123-356-00	ELECT	10MF	20%	16V
C197	1-123-356-00	ELECT	10MF	20%	16V
C198	1-123-379-00	ELECT	0.47MF	20%	50V
C199	1-101-004-00	CERAMIC	0.01MF		50V
C200	1-101-004-00	CERAMIC	0.01MF		50V
C201	1-101-004-00	CERAMIC	0.01MF		50V
C202	1-101-004-00	CERAMIC	0.01MF		50V
C203	1-101-004-00	CERAMIC	0.01MF		50V
C204	1-101-004-00	CERAMIC	0.01MF		50V
C205	1-123-382-00	ELECT	3.3MF	20%	50V
C207	1-123-382-00	ELECT	3.3MF	20%	50V
C208	1-101-004-00	CERAMIC	0.01MF		50V
C209	1-101-004-00	CERAMIC	0.01MF		50V
C210	1-123-356-00	ELECT	10MF	20%	16V
C211	1-101-004-00	CERAMIC	0.01MF		50V
C212	1-123-356-00	ELECT	10MF	20%	16V
C213	1-161-025-00	CERAMIC	0.1MF	10%	25V
C214	1-123-332-00	ELECT	47MF	20%	16V
C215	1-123-333-00	ELECT	100MF	20%	16V
C216	1-161-025-00	CERAMIC	0.1MF	10%	25V
C217	1-123-333-00	ELECT	100MF	20%	16V
C218	1-102-936-00	CERAMIC	3PF	0.25PF	50V
C601	1-101-004-00	CERAMIC	0.01MF		50V
C602	1-101-004-00	CERAMIC	0.01MF		50V
C603	1-101-004-00	CERAMIC	0.01MF		50V
C604	1-101-004-00	CERAMIC	0.01MF		50V
C605	1-123-356-00	ELECT	10MF	20%	16V
C606	1-101-004-00	CERAMIC	0.01MF		50V
C607	1-123-617-00	ELECT	10MF	20%	16V
C608	1-123-333-00	ELECT	100MF	20%	16V
C609	1-101-004-00	CERAMIC	0.01MF		50V
C610	1-123-356-00	ELECT	10MF	20%	16V
C611	1-123-332-00	ELECT	47MF	20%	16V
C616	1-123-356-00	ELECT	10MF	20%	16V
C617	1-123-323-00	ELECT	470MF	20%	16V
C618	1-123-356-00	ELECT	10MF	20%	16V
C619	1-123-356-00	ELECT	10MF	20%	16V
C620	1-123-356-00	ELECT	10MF	20%	16V
C621	1-123-333-00	ELECT	100MF	20%	16V
C622	1-102-127-21	CERAMIC	0.0068MF	10%	50V
C623	1-102-127-21	CERAMIC	0.0068MF	10%	50V
C624	1-123-356-00	ELECT	10MF	20%	16V
C625	1-101-004-00	CERAMIC	0.01MF		50V
C626	1-123-380-00	ELECT	1MF	20%	50V
C629	1-130-495-00	MYLAR	0.1MF	5%	50V
C630	1-101-004-00	CERAMIC	0.01MF		50V
C631	1-123-332-00	ELECT	47MF	20%	16V
C632	1-123-380-00	ELECT	1MF	20%	50V
C633	1-101-004-00	CERAMIC	0.01MF		50V
C650	1-101-004-00	CERAMIC	0.01MF		50V
C651	1-101-004-00	CERAMIC	0.01MF		50V
C652	1-102-074-00	CERAMIC	0.001MF	10%	50V
C653	1-101-004-00	CERAMIC	0.01MF		50V
C654	1-101-004-00	CERAMIC	0.01MF		50V
C655	1-102-074-00	CERAMIC	0.001MF	10%	50V
C656	1-123-617-00	ELECT	10MF	20%	16V

CONNECTOR

CN001	*1-564-031-00	PIN, CONNECTOR 6P
CN002	*1-564-030-00	PIN, CONNECTOR 5P
CN003	*1-560-893-00	PIN, CONNECTOR 5P
CN004	*1-560-891-00	PIN, CONNECTOR 3P
CN005	*1-560-898-00	PIN, CONNECTOR 10P
CN006	*1-560-895-00	PIN, CONNECTOR 7P
CN007	*1-560-891-00	PIN, CONNECTOR 3P
CN008	*1-560-893-00	PIN, CONNECTOR 5P
CN009	*1-560-896-00	PIN, CONNECTOR 8P
CN010	*1-560-894-00	PIN, CONNECTOR 6P
CN011	*1-560-893-00	PIN, CONNECTOR 5P
CN012	*1-560-896-00	PIN, CONNECTOR 8P
CN013	*1-560-894-00	PIN, CONNECTOR 6P
CN014	*1-560-897-00	PIN, CONNECTOR 9P
CN015	*1-564-029-00	PIN, CONNECTOR 4P
CN016	*1-560-890-00	PIN, CONNECTOR 2P

DIODE

D001	8-719-911-19	DIODE 1SS119
D002	8-719-911-19	DIODE 1SS119
D003	8-719-911-19	DIODE 1SS119
D004	8-719-911-19	DIODE 1SS119
D005	8-719-911-19	DIODE 1SS119

When indicating parts by reference number, please include the board name.

AF-14

Ref.No	Part No.	Description	Remark
D006	8-719-911-19	DIODE 1SS119	
D007	8-719-911-19	DIODE 1SS119	
D008	8-719-000-04	DIODE MC911	
D010	8-719-000-12	DIODE MC931	
D013	8-719-911-19	DIODE 1SS119	
D014	8-719-911-19	DIODE 1SS119	
D015	8-719-000-06	DIODE MC921	
D016	8-719-911-19	DIODE 1SS119	
D017	8-719-911-19	DIODE 1SS119	
D018	8-719-911-19	DIODE 1SS119	
D019	8-719-911-19	DIODE 1SS119	
D020	8-719-000-12	DIODE MC931	
D022	8-719-101-61	DIODE RD6.2EL2	
D023	8-719-911-19	DIODE 1SS119	
D024	8-719-000-06	DIODE MC921	
D025	8-719-000-06	DIODE MC921	
D026	8-719-000-12	DIODE MC931	
D027	8-719-911-19	DIODE 1SS119	
D029	8-719-102-73	DIODE RD6.2EN1	
D601	8-719-911-19	DIODE 1SS119	
D602	8-719-911-19	DIODE 1SS119	
D603	8-719-911-19	DIODE 1SS119	
D604	8-719-911-19	DIODE 1SS119	
D606	8-719-911-19	DIODE 1SS119	
D607	8-719-911-19	DIODE 1SS119	
D608	8-719-911-19	DIODE 1SS119	
D609	8-719-101-86	DIODE RD13EL2	
D610	8-719-911-19	DIODE 1SS119	
D611	8-719-000-06	DIODE MC921	
		IC	
IC001	8-752-010-40	IC CX20104	
IC002	8-752-010-50	IC CX20105	
IC003	8-752-009-71	IC CX20097A	
IC004	8-752-010-50	IC CX20105	
IC007	8-759-240-66	IC TC4066BP	
IC009	8-759-700-62	IC NJM4562D	
IC010	8-759-240-66	IC TC4066BP	
IC011	8-759-922-43	IC TK15052D	
IC012	8-759-915-48	IC TK15011Z	
IC013	8-759-145-58	IC UPC4558C	
		COIL	
L001	1-408-421-00	MICRO INDUCTOR 100UH	
L002	1-408-405-00	MICRO INDUCTOR 4.7UH	
L003	1-408-421-00	MICRO INDUCTOR 100UH	
L004	1-408-405-00	MICRO INDUCTOR 4.7UH	
L005	1-408-421-00	MICRO INDUCTOR 100UH	
L006	1-408-418-00	MICRO INDUCTOR 56UH	
L007	1-408-609-41	MICRO INDUCTOR 33UH	
L008	1-408-416-00	MICRO INDUCTOR 39UH	
L009	1-408-413-00	MICRO INDUCTOR 22UH	
L601	1-408-421-00	MICRO INDUCTOR 100UH	

The components identified by shading and mark ⚠ are critical for safety. Replace only with part number specified.

When indicating parts by reference number, please include the board name.

Ref.No	Part No.	Description	Remark
		FILTER	
LPF001	1-235-365-11	L.P.F	
LPF002	1-235-365-11	L.P.F	
		IC LINK	
PS001⚠	1-532-605-00	LINK, IC	
		TRANSISTOR	
Q001	8-729-900-89	TRANSISTOR DTC144ES	
Q002	8-729-204-83	TRANSISTOR 2SA1048	
Q003	8-729-800-42	TRANSISTOR 2SK152	
Q004	8-729-204-83	TRANSISTOR 2SA1048	
Q005	8-729-245-83	TRANSISTOR 2SC2458	
Q006	8-729-900-89	TRANSISTOR DTC144ES	
Q007	8-729-900-89	TRANSISTOR DTC144ES	
Q008	8-729-800-42	TRANSISTOR 2SK152	
Q009	8-729-204-83	TRANSISTOR 2SA1048	
Q010	8-729-245-83	TRANSISTOR 2SC2458	
Q011	8-729-900-89	TRANSISTOR DTC144ES	
Q012	8-729-900-89	TRANSISTOR DTC144ES	
Q013	8-729-113-33	TRANSISTOR 2SB733	
Q014	8-729-117-54	TRANSISTOR 2SA1175	
Q015	8-729-603-30	TRANSISTOR 2SC403SP	
Q016	8-729-603-30	TRANSISTOR 2SC403SP	
Q017	8-729-603-30	TRANSISTOR 2SC403SP	
Q018	8-729-204-83	TRANSISTOR 2SA1048	
Q019	8-729-900-89	TRANSISTOR DTC144ES	
Q020	8-729-204-83	TRANSISTOR 2SA1048	
Q021	8-729-900-89	TRANSISTOR DTC144ES	
Q022	8-729-245-83	TRANSISTOR 2SC2458	
Q023	8-729-245-83	TRANSISTOR 2SC2458	
Q024	8-729-245-83	TRANSISTOR 2SC2458	
Q025	8-729-245-83	TRANSISTOR 2SC2458	
Q026	8-729-900-89	TRANSISTOR DTC144ES	
Q027	8-729-245-83	TRANSISTOR 2SC2458	
Q028	8-729-900-89	TRANSISTOR DTC144ES	
Q029	8-729-900-89	TRANSISTOR DTC144ES	
Q030	8-729-245-83	TRANSISTOR 2SC2458	
Q031	8-729-245-83	TRANSISTOR 2SC2458	
Q032	8-729-245-83	TRANSISTOR 2SC2458	
Q033	8-729-245-83	TRANSISTOR 2SC2458	
Q034	8-729-900-80	TRANSISTOR DTC114ES	
Q035	8-729-900-80	TRANSISTOR DTC114ES	
Q036	8-729-900-80	TRANSISTOR DTC114ES	
Q037	8-729-900-80	TRANSISTOR DTC114ES	
Q038	8-729-900-80	TRANSISTOR DTC114ES	
Q039	8-729-900-80	TRANSISTOR DTC114ES	
Q040	8-729-900-89	TRANSISTOR DTC144ES	
Q041	8-729-204-83	TRANSISTOR 2SA1048	
Q042	8-729-204-83	TRANSISTOR 2SA1048	
Q043	8-729-900-89	TRANSISTOR DTC144ES	
Q044	8-729-177-43	TRANSISTOR 2SD774	

Ref.No	Part No.	Description	Remark
Q048	8-729-900-89	TRANSISTOR DTC144ES	
Q050	8-729-900-89	TRANSISTOR DTC144ES	
Q501	8-729-245-83	TRANSISTOR 2SC2458	
Q502	8-729-245-83	TRANSISTOR 2SC2458	
Q503	8-729-245-83	TRANSISTOR 2SC2458	
Q601	8-729-245-83	TRANSISTOR 2SC2458	
Q602	8-729-245-83	TRANSISTOR 2SC2458	
Q603	8-729-245-83	TRANSISTOR 2SC2458	
Q604	8-729-245-83	TRANSISTOR 2SC2458	
Q605	8-729-900-89	TRANSISTOR DTC144ES	
Q607	8-729-245-83	TRANSISTOR 2SC2458	
Q608	8-729-245-83	TRANSISTOR 2SC2458	
Q609	8-729-245-83	TRANSISTOR 2SC2458	
Q610	8-729-900-89	TRANSISTOR DTC144ES	
Q611	8-729-245-83	TRANSISTOR 2SC2458	
Q612	8-729-245-83	TRANSISTOR 2SC2458	
Q613	8-729-245-83	TRANSISTOR 2SC2458	
Q614	8-729-245-83	TRANSISTOR 2SC2458	
Q615	8-729-245-83	TRANSISTOR 2SC2458	
Q616	8-729-245-83	TRANSISTOR 2SC2458	
Q619 ⚠	8-729-113-33	TRANSISTOR 2SB733	
Q621 ⚠	8-729-113-33	TRANSISTOR 2SB733	
Q623	8-729-900-36	TRANSISTOR DTC124ES	
Q624	8-729-900-89	TRANSISTOR DTC144ES	
Q625	8-729-245-83	TRANSISTOR 2SC2458	
Q626	8-729-245-83	TRANSISTOR 2SC2458	
Q627	8-729-245-83	TRANSISTOR 2SC2458	
Q628	8-729-900-89	TRANSISTOR DTC144ES	
Q629	8-729-245-83	TRANSISTOR 2SC2458	
Q630	8-729-245-83	TRANSISTOR 2SC2458	
Q631	8-729-900-89	TRANSISTOR DTC144ES	
Q632	8-729-900-89	TRANSISTOR DTC144ES	
Q633	8-729-900-89	TRANSISTOR DTC144ES	
Q650	8-729-245-83	TRANSISTOR 2SC2458	
Q651	8-729-245-83	TRANSISTOR 2SC2458	

RESISTOR

Ref.No	Part No.	Description				Remark
R001	1-247-849-00	CARBON	5.6K	5%	1/6W	
R002	1-247-831-00	CARBON	1K	5%	1/6W	
R003	1-247-831-00	CARBON	1K	5%	1/6W	
R004	1-247-827-00	CARBON	680	5%	1/6W	
R005	1-247-827-00	CARBON	680	5%	1/6W	
R006	1-247-843-00	CARBON	3.3K	5%	1/6W	
R007	1-249-421-11	CARBON	2.2K	5%	1/6W	
R008	1-247-831-00	CARBON	1K	5%	1/6W	
R009	1-247-831-00	CARBON	1K	5%	1/6W	
R010	1-247-831-00	CARBON	1K	5%	1/6W	
R011	1-247-831-00	CARBON	1K	5%	1/6W	
R012	1-247-807-00	CARBON	100	5%	1/6W	
R013	1-247-849-00	CARBON	5.6K	5%	1/6W	
R014	1-247-831-00	CARBON	1K	5%	1/6W	
R015	1-247-831-00	CARBON	1K	5%	1/6W	
R016	1-247-827-00	CARBON	680	5%	1/6W	
R017	1-247-827-00	CARBON	680	5%	1/6W	
R018	1-247-843-00	CARBON	3.3K	5%	1/6W	
R019	1-249-421-11	CARBON	2.2K	5%	1/6W	
R020	1-247-831-00	CARBON	1K	5%	1/6W	
R021	1-247-831-00	CARBON	1K	5%	1/6W	
R022	1-247-831-00	CARBON	1K	5%	1/6W	
R023	1-247-831-00	CARBON	1K	5%	1/6W	
R024	1-247-847-00	CARBON	4.7K	5%	1/6W	
R025	1-247-847-00	CARBON	4.7K	5%	1/6W	
R026	1-247-857-00	CARBON	12K	5%	1/6W	
R027	1-247-869-00	CARBON	39K	5%	1/6W	
R028 ⚠	1-213-128-00	METAL OXIDE	56	5%	1W	F
R029	1-247-826-00	CARBON	620	5%	1/6W	
R030	1-214-673-00	METAL	4.7	1%	1/4W	
R031	1-247-823-00	CARBON	470	5%	1/6W	
R032	1-247-820-00	CARBON	360	5%	1/6W	
R033	1-247-799-00	CARBON	47	5%	1/6W	
R034	1-247-831-00	CARBON	1K	5%	1/6W	
R035	1-247-819-00	CARBON	330	5%	1/6W	
R036	1-249-429-11	CARBON	10K	5%	1/6W	
R037	1-247-853-00	CARBON	8.2K	5%	1/6W	
R038	1-215-436-00	METAL	4.3K	1%	1/6W	
R039	1-215-423-00	METAL	1.2K	1%	1/6W	
R040	1-247-847-00	CARBON	4.7K	5%	1/6W	
R041	1-247-847-00	CARBON	4.7K	5%	1/6W	
R042	1-247-861-00	CARBON	18K	5%	1/6W	
R043	1-247-861-00	CARBON	18K	5%	1/6W	
R044	1-247-861-00	CARBON	18K	5%	1/6W	
R045	1-247-861-00	CARBON	18K	5%	1/6W	
R046 ⚠	1-212-853-00	FUSIBLE	6.8	5%	1/4W	F
R047	1-247-823-00	CARBON	470	5%	1/6W	
R048	1-247-823-00	CARBON	470	5%	1/6W	
R049	1-247-851-00	CARBON	6.8K	5%	1/6W	
R050	1-247-837-00	CARBON	1.8K	5%	1/6W	
R051	1-247-821-00	CARBON	390	5%	1/6W	
R052	1-247-859-00	CARBON	15K	5%	1/6W	
R053	1-247-857-00	CARBON	12K	5%	1/6W	
R054	1-247-863-00	CARBON	22K	5%	1/6W	
R055	1-247-852-00	CARBON	7.5K	5%	1/6W	
R056	1-247-848-00	CARBON	5.1K	5%	1/6W	
R057	1-249-421-11	CARBON	2.2K	5%	1/6W	
R058	1-247-861-00	CARBON	18K	5%	1/6W	
R059	1-249-421-11	CARBON	2.2K	5%	1/6W	
R060	1-249-421-11	CARBON	2.2K	5%	1/6W	
R061	1-247-861-00	CARBON	18K	5%	1/6W	
R062	1-247-898-00	CARBON	620K	5%	1/6W	
R063	1-247-843-00	CARBON	3.3K	5%	1/6W	
R064	1-247-843-00	CARBON	3.3K	5%	1/6W	
R065	1-247-843-00	CARBON	3.3K	5%	1/6W	
R066	1-247-807-00	CARBON	100	5%	1/6W	
R067	1-215-433-00	METAL	3.3K	1%	1/6W	
R068	1-247-859-00	CARBON	15K	5%	1/6W	
R069	1-247-824-00	CARBON	510	5%	1/6W	

The components identified by shading and mark ⚠ are critical for safety. Replace only with part number specified.

When indicating parts by reference number, please include the board name.

AF-14

Ref.No	Part No.	Description				Remark
R070	1-249-429-11	CARBON	10K	5%	1/6W	
R071	1-247-840-00	CARBON	2.4K	5%	1/6W	
R072	1-249-429-11	CARBON	10K	5%	1/6W	
R073	1-249-429-11	CARBON	10K	5%	1/6W	
R074	1-247-843-00	CARBON	3.3K	5%	1/6W	
R075	1-247-814-00	CARBON	200	5%	1/6W	
R076	1-247-834-00	CARBON	1.3K	5%	1/6W	
R077	1-247-858-00	CARBON	13K	5%	1/6W	
R078	1-247-838-00	CARBON	2K	5%	1/6W	
R079	1-247-858-00	CARBON	13K	5%	1/6W	
R080	1-249-429-11	CARBON	10K	5%	1/6W	
R081	1-247-833-00	CARBON	1.2K	5%	1/6W	
R082	1-247-895-00	CARBON	470K	5%	1/6W	
R083	1-247-834-00	CARBON	1.3K	5%	1/6W	
R084	1-247-853-00	CARBON	8.2K	5%	1/6W	
R085	1-249-434-11	CARBON	27K	5%	1/6W	
R086	1-249-414-11	CARBON	560	5%	1/6W	
R087	1-247-824-00	CARBON	510	5%	1/6W	
R102	1-247-831-00	CARBON	1K	5%	1/6W	
R109	1-247-847-00	CARBON	4.7K	5%	1/6W	
R110	1-247-847-00	CARBON	4.7K	5%	1/6W	
R114	1-247-831-00	CARBON	1K	5%	1/6W	
R115	1-249-437-11	CARBON	47K	5%	1/6W	
R116	1-249-437-11	CARBON	47K	5%	1/6W	
R117	1-247-879-00	CARBON	100K	5%	1/6W	
R118	1-247-881-00	CARBON	120K	5%	1/6W	
R119	1-247-847-00	CARBON	4.7K	5%	1/6W	
R120	1-247-847-00	CARBON	4.7K	5%	1/6W	
R121	1-249-437-11	CARBON	47K	5%	1/6W	
R122	1-249-437-11	CARBON	47K	5%	1/6W	
R123	1-249-437-11	CARBON	47K	5%	1/6W	
R124	1-249-421-11	CARBON	2.2K	5%	1/6W	
R125	1-249-419-11	CARBON	1.5K	5%	1/6W	
R126	1-247-869-00	CARBON	39K	5%	1/6W	
R127	1-249-429-11	CARBON	10K	5%	1/6W	
R128	1-247-813-00	CARBON	180	5%	1/6W	
R129	1-247-863-00	CARBON	22K	5%	1/6W	
R130	1-249-429-11	CARBON	10K	5%	1/6W	
R131	1-247-817-00	CARBON	270	5%	1/6W	
R132	1-247-873-00	CARBON	56K	5%	1/6W	
R133	1-247-867-00	CARBON	33K	5%	1/6W	
R134	1-247-849-00	CARBON	5.6K	5%	1/6W	
R135	1-247-847-00	CARBON	4.7K	5%	1/6W	
R136	1-247-847-00	CARBON	4.7K	5%	1/6W	
R137	1-247-849-00	CARBON	5.6K	5%	1/6W	
R138	1-249-429-11	CARBON	10K	5%	1/6W	
R139	1-249-429-11	CARBON	10K	5%	1/6W	
R140	1-247-807-00	CARBON	100	5%	1/6W	
R141	1-247-807-00	CARBON	100	5%	1/6W	
R142	1-249-421-11	CARBON	2.2K	5%	1/6W	
R143	1-249-421-11	CARBON	2.2K	5%	1/6W	
R144	1-249-429-11	CARBON	10K	5%	1/6W	
R145	1-249-429-11	CARBON	10K	5%	1/6W	

Ref.No	Part No.	Description				Remark
R146	1-249-429-11	CARBON	10K	5%	1/6W	
R147	1-249-421-11	CARBON	2.2K	5%	1/6W	
R148	1-249-437-11	CARBON	47K	5%	1/6W	
R152	1-215-462-00	METAL	51K	1%	1/6W	
R153	1-247-815-00	CARBON	220	5%	1/6W	
R154	1-215-465-00	METAL	68K	1%	1/6W	
R155	1-215-446-00	METAL	11K	1%	1/6W	
R156	1-215-465-00	METAL	68K	1%	1/6W	
R157	1-215-446-00	METAL	11K	1%	1/6W	
R158	1-215-462-00	METAL	51K	1%	1/6W	
R159	1-249-437-11	CARBON	47K	5%	1/6W	
R160	1-249-429-11	CARBON	10K	5%	1/6W	
R161	1-249-437-11	CARBON	47K	5%	1/6W	
R162	1-247-815-00	CARBON	220	5%	1/6W	
R163	1-249-429-11	CARBON	10K	5%	1/6W	
R164	1-249-429-11	CARBON	10K	5%	1/6W	
R165	1-215-429-00	METAL	2.2K	1%	1/6W	
R166	1-215-429-00	METAL	2.2K	1%	1/6W	
R167	1-249-429-11	CARBON	10K	5%	1/6W	
R168	1-249-429-11	CARBON	10K	5%	1/6W	
R169	1-247-843-00	CARBON	3.3K	5%	1/6W	
R170	1-247-849-00	CARBON	5.6K	5%	1/6W	
R171	1-247-851-00	CARBON	6.8K	5%	1/6W	
R172	1-247-841-00	CARBON	2.7K	5%	1/6W	
R175	1-247-824-00	CARBON	510	5%	1/6W	
R176	1-247-836-00	CARBON	1.6K	5%	1/6W	
R177	1-249-414-11	CARBON	560	5%	1/6W	
R178	1-249-434-11	CARBON	27K	5%	1/6W	
R179	1-247-853-00	CARBON	8.2K	5%	1/6W	
R180	1-247-834-00	CARBON	1.3K	5%	1/6W	
R181	1-247-838-00	CARBON	2K	5%	1/6W	
R182	1-247-858-00	CARBON	13K	5%	1/6W	
R183	1-247-895-00	CARBON	470K	5%	1/6W	
R184	1-247-858-00	CARBON	13K	5%	1/6W	
R185	1-249-429-11	CARBON	10K	5%	1/6W	
R186	1-247-833-00	CARBON	1.2K	5%	1/6W	
R187	1-247-843-00	CARBON	3.3K	5%	1/6W	
R188	1-247-834-00	CARBON	1.3K	5%	1/6W	
R189	1-247-814-00	CARBON	200	5%	1/6W	
R190	1-249-429-11	CARBON	10K	5%	1/6W	
R191	1-249-429-11	CARBON	10K	5%	1/6W	
R192	1-247-840-00	CARBON	2.4K	5%	1/6W	
R193	1-249-429-11	CARBON	10K	5%	1/6W	
R194	1-247-824-00	CARBON	510	5%	1/6W	
R195	1-247-859-00	CARBON	15K	5%	1/6W	
R196	1-247-807-00	CARBON	100	5%	1/6W	
R197	1-215-433-00	METAL	3.3K	1%	1/6W	
R198	1-247-848-00	CARBON	5.1K	5%	1/6W	
R199	1-249-429-11	CARBON	10K	5%	1/6W	
R200	1-247-861-00	CARBON	18K	5%	1/6W	
R201	1-249-421-11	CARBON	2.2K	5%	1/6W	
R202	1-247-861-00	CARBON	18K	5%	1/6W	
R203	1-249-421-11	CARBON	2.2K	5%	1/6W	

When indicating parts by reference number, please include the board name.

Ref.No	Part No.	Description				Remark
R206	1-247-843-00	CARBON	3.3K	5%	1/6W	
R207	1-247-843-00	CARBON	3.3K	5%	1/6W	
R208	1-247-843-00	CARBON	3.3K	5%	1/6W	
R209	1-247-883-00	CARBON	150K	5%	1/6W	
R210	1-247-864-00	CARBON	24K	5%	1/6W	
R211	1-247-898-00	CARBON	620K	5%	1/6W	
R212	1-247-847-00	CARBON	4.7K	5%	1/6W	
R213	1-247-843-00	CARBON	3.3K	5%	1/6W	
R214	1-247-841-00	CARBON	2.7K	5%	1/6W	
R215	1-249-419-11	CARBON	1.5K	5%	1/6W	
R216	1-247-857-00	CARBON	12K	5%	1/6W	
R217	1-247-864-00	CARBON	24K	5%	1/6W	
R218	1-247-861-00	CARBON	18K	5%	1/6W	
R219	1-249-437-11	CARBON	47K	5%	1/6W	
R220	1-247-821-00	CARBON	390	5%	1/6W	
R221	1-247-859-00	CARBON	15K	5%	1/6W	
R222	1-247-837-00	CARBON	1.8K	5%	1/6W	
R223	1-247-851-00	CARBON	6.8K	5%	1/6W	
R225	1-247-847-00	CARBON	4.7K	5%	1/6W	
R226	1-247-847-00	CARBON	4.7K	5%	1/6W	
R227 ⚠	1-212-853-00	FUSIBLE	6.8	5%	1/4W	F
R228	1-247-829-00	CARBON	820	5%	1/6W	
R229	1-247-819-00	CARBON	330	5%	1/6W	
R230	1-247-827-00	CARBON	680	5%	1/6W	
R231	1-247-847-00	CARBON	4.7K	5%	1/6W	
R232	1-247-849-00	CARBON	5.6K	5%	1/6W	
R233	1-247-823-00	CARBON	470	5%	1/6W	
R239	1-247-847-00	CARBON	4.7K	5%	1/6W	
R241	1-247-879-00	CARBON	100K	5%	1/6W	
R244	1-247-875-00	CARBON	68K	5%	1/6W	
R501	1-249-437-11	CARBON	47K	5%	1/6W	
R502	1-249-437-11	CARBON	47K	5%	1/6W	
R503	1-249-437-11	CARBON	47K	5%	1/6W	
R601	1-247-845-00	CARBON	3.9K	5%	1/6W	
R602	1-247-837-00	CARBON	1.8K	5%	1/6W	
R603	1-247-831-00	CARBON	1K	5%	1/6W	
R604	1-247-857-00	CARBON	12K	5%	1/6W	
R605	1-247-851-00	CARBON	6.8K	5%	1/6W	
R607	1-247-851-00	CARBON	6.8K	5%	1/6W	
R608	1-247-851-00	CARBON	6.8K	5%	1/6W	
R610	1-247-846-00	CARBON	4.3K	5%	1/6W	
R611	1-249-429-11	CARBON	10K	5%	1/6W	
R612	1-247-831-00	CARBON	1K	5%	1/6W	
R613	1-247-857-00	CARBON	12K	5%	1/6W	
R614	1-247-857-00	CARBON	12K	5%	1/6W	
R615	1-249-414-11	CARBON	560	5%	1/6W	
R616	1-247-847-00	CARBON	4.7K	5%	1/6W	
R617	1-247-831-00	CARBON	1K	5%	1/6W	
R618	1-249-429-11	CARBON	10K	5%	1/6W	
R619	1-249-429-11	CARBON	10K	5%	1/6W	
R620	1-247-831-00	CARBON	1K	5%	1/6W	
R625	1-247-847-00	CARBON	4.7K	5%	1/6W	
R626	1-247-831-00	CARBON	1K	5%	1/6W	

Ref.No	Part No.	Description				Remark
R627	1-249-421-11	CARBON	2.2K	5%	1/6W	
R628	1-247-831-00	CARBON	1K	5%	1/6W	
R632	1-247-847-00	CARBON	4.7K	5%	1/6W	
R633	1-247-847-00	CARBON	4.7K	5%	1/6W	
R634	1-249-414-11	CARBON	560	5%	1/6W	
R635	1-247-847-00	CARBON	4.7K	5%	1/6W	
R636	1-247-847-00	CARBON	4.7K	5%	1/6W	
R638	1-247-847-00	CARBON	4.7K	5%	1/6W	
R639 ⚠	1-247-827-00	CARBON	680	5%	1/6W	
R640	1-247-847-00	CARBON	4.7K	5%	1/6W	
R641 ⚠	1-247-827-00	CARBON	680	5%	1/6W	
R642 ⚠	1-212-849-00	FUSIBLE	4.7	5%	1/4W	F
R643	1-247-851-00	CARBON	6.8K	5%	1/6W	
R644	1-247-847-00	CARBON	4.7K	5%	1/6W	
R650	1-247-843-00	CARBON	3.3K	5%	1/6W	
R651	1-247-879-00	CARBON	100K	5%	1/6W	
R652	1-247-859-00	CARBON	15K	5%	1/6W	
R653	1-247-851-00	CARBON	6.8K	5%	1/6W	
R654	1-247-823-00	CARBON	470	5%	1/6W	
R655	1-247-843-00	CARBON	3.3K	5%	1/6W	
R656	1-247-879-00	CARBON	100K	5%	1/6W	
R657	1-247-859-00	CARBON	15K	5%	1/6W	
R658	1-247-851-00	CARBON	6.8K	5%	1/6W	
R659	1-247-823-00	CARBON	470	5%	1/6W	
R660	1-247-831-00	CARBON	1K	5%	1/6W	
R661	1-247-831-00	CARBON	1K	5%	1/6W	
R662	1-247-847-00	CARBON	4.7K	5%	1/6W	
R663	1-247-887-00	CARBON	220K	5%	1/6W	
R664	1-247-887-00	CARBON	220K	5%	1/6W	
R665	1-249-437-11	CARBON	47K	5%	1/6W	
R666	1-247-895-00	CARBON	470K	5%	1/6W	
R667	1-247-863-00	CARBON	22K	5%	1/6W	
R668	1-249-437-11	CARBON	47K	5%	1/6W	
R669	1-247-895-00	CARBON	470K	5%	1/6W	
R670	1-247-863-00	CARBON	22K	5%	1/6W	
R671	1-249-429-11	CARBON	10K	5%	1/6W	
R672	1-215-415-00	METAL	560	1%	1/6W	
R675	1-247-843-00	CARBON	3.3K	5%	1/6W	
R677	1-247-849-00	CARBON	5.6K	5%	1/6W	
R678	1-247-879-00	CARBON	100K	5%	1/6W	
R679	1-247-879-00	CARBON	100K	5%	1/6W	
R680	1-249-437-11	CARBON	47K	5%	1/6W	
R681	1-249-437-11	CARBON	47K	5%	1/6W	
R682	1-247-879-00	CARBON	100K	5%	1/6W	
R683	1-247-847-00	CARBON	4.7K	5%	1/6W	
R684	1-249-437-11	CARBON	47K	5%	1/6W	
R685	1-249-437-11	CARBON	47K	5%	1/6W	
R686	1-249-437-11	CARBON	47K	5%	1/6W	
R687	1-247-807-00	CARBON	100	5%	1/6W	
R688	1-249-429-11	CARBON	10K	5%	1/6W	
R689	1-247-879-00	CARBON	100K	5%	1/6W	
R690	1-247-889-00	CARBON	270K	5%	1/6W	
R691	1-247-823-00	CARBON	470	5%	1/6W	

The components identified by shading and mark ⚠ are critical for safety. Replace only with part number specified.

When indicating parts by reference number, please include the board name.

AF-14 PJ-3 SS-50

Ref.No	Part No.	Description				Remark
R692	1-247-847-00	CARBON	4.7K	5%	1/6W	
R693	1-247-807-00	CARBON	100	5%	1/6W	
R693	1-247-807-00	CARBON	100	5%	1/6W	
R694	1-249-425-11	CARBON	4.7K	5%	1/6W	
		VARIABLE RESISTOR				
RV001	1-228-991-00	RES, ADJ, CARBON 2.2K				
RV002	1-228-994-00	RES, ADJ, CARBON 10K				
RV003	1-228-993-00	RES, ADJ, CARBON 4.7K				
RV005	1-228-993-00	RES, ADJ, CARBON 4.7K				
RV006	1-228-993-00	RES, ADJ, CARBON 4.7K				
RV007	1-228-993-00	RES, ADJ, CARBON 4.7K				
RV008	1-228-990-00	RES, ADJ, CARBON 1K				
RV009	1-228-921-00	RES, ADJ, CARBON 4.7K				
RV010	1-228-994-00	RES, ADJ, CARBON 10K				
RV011	1-228-991-00	RES, ADJ, CARBON 2.2K				
RV012	1-228-990-00	RES, ADJ, CARBON 1K				
RV013	1-228-993-00	RES, ADJ, CARBON 4.7K				
RV014	1-228-993-00	RES, ADJ, CARBON 4.7K				
RV601	1-228-919-00	RES, ADJ, CARBON 1K				
RV602	1-228-921-00	RES, ADJ, CARBON 4.7K				
RV603	1-228-921-00	RES, ADJ, CARBON 4.7K				
RV604	1-228-995-00	RES, ADJ, METAL GLAZE 22K				
RV605	1-228-995-00	RES, ADJ, METAL GLAZE 22K				
		TRANSFORMER				
T001	1-427-546-11	TRANSFORMER, I/O				
T002	1-427-546-11	TRANSFORMER, I/O				
		THERMISTOR				
TH001	1-800-202-XX	THERMISTOR S-10K				
TH002	1-800-198-XX	THERMISTOR S-1K				
**********						
	*1-617-034-13	PJ-3 BOARD **********				
	1-507-907-11	JACK, PIN 4P				
**********						
	*A-6715-272-A	SS-50 BOARD, COMPLETE **********				
	*3-681-170-00	HEAT SINK, S				
	*3-683-631-01	CLAMP				
		CAPACITOR				
C101	1-161-023-00	CERAMIC	0.068MF	10%	25V	
C102	1-102-816-00	CERAMIC	120PF	10%	50V	
C103	1-102-513-00	CERAMIC	18PF	5%	50V	
C104	1-102-513-00	CERAMIC	18PF	5%	50V	
C105	1-161-023-00	CERAMIC	0.068MF	10%	25V	
C106	1-102-529-00	CERAMIC	100PF	5%	50V	

Ref.No	Part No.	Description				Remark
C107	1-102-529-00	CERAMIC	100PF	5%	50V	
C108	1-161-023-00	CERAMIC	0.068MF	10%	25V	
C109	1-161-023-00	CERAMIC	0.068MF	10%	25V	
C110	1-161-025-00	CERAMIC	0.1MF	10%	25V	
C111	1-161-025-00	CERAMIC	0.1MF	10%	25V	
C112	1-130-499-00	MYLAR	0.22MF	5%	50V	
C113	1-123-380-00	ELECT	1MF	20%	50V	
C114	1-123-343-00	ELECT	33MF	20%	25V	
C115	1-102-518-00	CERAMIC	33PF	5%	50V	
C116	1-102-518-00	CERAMIC	33PF	5%	50V	
C119	1-161-059-00	CERAMIC	0.047MF	10%	25V	
C120	1-161-059-00	CERAMIC	0.047MF	10%	25V	
C121	1-161-013-00	CERAMIC	0.01MF	10%	25V	
C122	1-123-318-00	ELECT	33MF	20%	16V	
C150	1-123-330-00	ELECT	22MF	20%	16V	
C301	1-131-344-00	TANTALUM	0.33MF	10%	35V	
C302	1-130-491-00	MYLAR	0.047MF	5%	50V	
C303	1-130-491-00	MYLAR	0.047MF	5%	50V	
C304	1-161-059-00	CERAMIC	0.047MF	10%	25V	
C305	1-123-308-00	ELECT	220MF	20%	10V	
C306	1-130-491-00	MYLAR	0.047MF	5%	50V	
C307	1-130-491-00	MYLAR	0.047MF	5%	50V	
C308	1-161-013-00	CERAMIC	0.01MF	10%	25V	
C309	1-161-013-00	CERAMIC	0.01MF	10%	25V	
C310	1-123-356-00	ELECT	10MF	20%	16V	
C311	1-130-483-00	MYLAR	0.01MF	5%	50V	
C312	1-130-491-00	MYLAR	0.047MF	5%	50V	
C313	1-130-491-00	MYLAR	0.047MF	5%	50V	
C314	1-130-491-00	MYLAR	0.047MF	5%	50V	
C315	1-130-491-00	MYLAR	0.047MF	5%	50V	
C316	1-130-491-00	MYLAR	0.047MF	5%	50V	
C317	1-161-045-00	CERAMIC	0.0033MF	10%	25V	
C318	1-161-039-00	CERAMIC	0.001MF	10%	25V	
C320	1-123-380-00	ELECT	1MF	20%	50V	
C321	1-161-039-00	CERAMIC	0.001MF	10%	25V	
C323	1-123-332-00	ELECT	47MF	20%	16V	
C324	1-161-059-00	CERAMIC	0.047MF	10%	25V	
C325	1-123-356-00	ELECT	10MF	20%	16V	
C328	1-123-381-00	ELECT	2.2MF	20%	50V	
C329	1-123-381-00	ELECT	2.2MF	20%	50V	
C330	1-123-381-00	ELECT	2.2MF	20%	50V	
C332	1-123-356-00	ELECT	10MF	20%	16V	
C333	1-123-356-00	ELECT	10MF	20%	16V	
C334	1-123-381-00	ELECT	2.2MF	20%	50V	
C335	1-161-039-00	CERAMIC	0.001MF	10%	25V	
C336	1-123-332-00	ELECT	47MF	20%	16V	
C337	1-161-059-00	CERAMIC	0.047MF	10%	25V	
C338	1-161-045-00	CERAMIC	0.0033MF	10%	25V	
C339	1-130-493-00	MYLAR	0.068MF	5%	50V	
C340	1-123-332-00	ELECT	47MF	20%	16V	
C341	1-102-973-00	CERAMIC	100PF	5%	50V	
C342	1-123-356-00	ELECT	10MF	20%	16V	
C343	1-123-381-00	ELECT	2.2MF	20%	50V	

When indicating parts by reference number, please include the board name.

Ref.No	Part No.	Description			Remark
C344	1-123-379-00	ELECT	0.47MF	20%	50V
C345	1-130-483-00	MYLAR	0.01MF	5%	50V
C346	1-123-369-00	ELECT	4.7MF	20%	25V
C347	1-123-369-00	ELECT	4.7MF	20%	25V
C349	1-161-059-00	CERAMIC	0.047MF	10%	25V
C350	1-123-333-00	ELECT	100MF	20%	16V
C351	1-130-493-00	MYLAR	0.068MF	5%	50V
C352	1-130-483-00	MYLAR	0.01MF	5%	50V
C353	1-123-321-00	ELECT	220MF	20%	16V
C354	1-161-053-00	CERAMIC	0.015MF	10%	25V
C355	1-161-043-00	CERAMIC	0.0022MF	10%	25V
C356	1-161-059-00	CERAMIC	0.047MF	10%	25V
C357	1-161-025-00	CERAMIC	0.1MF	10%	25V
C358	1-161-059-00	CERAMIC	0.047MF	10%	25V
C359	1-123-356-00	ELECT	10MF	20%	16V
C360	1-161-059-00	CERAMIC	0.047MF	10%	25V
C361	1-123-332-00	ELECT	47MF	20%	16V
C362	1-123-380-00	ELECT	1MF	20%	50V
C370	1-123-381-00	ELECT	2.2MF	20%	50V
C371	1-123-307-00	ELECT	100MF	20%	10V
C372	1-123-332-00	ELECT	47MF	20%	16V
C373	1-123-356-00	ELECT	10MF	20%	16V
C374	1-161-025-00	CERAMIC	0.1MF	10%	25V
C375	1-123-356-00	ELECT	10MF	20%	16V
C376	1-123-318-00	ELECT	33MF	20%	10V
C377	1-130-497-00	MYLAR	0.15MF	5%	50V
C378	1-161-039-00	CERAMIC	0.001MF	10%	25V
C379	1-161-039-00	CERAMIC	0.001MF	10%	25V
C501	1-161-013-00	CERAMIC	0.01MF	10%	25V
C502	1-161-013-00	CERAMIC	0.01MF	10%	25V
C503	1-161-059-00	CERAMIC	0.047MF	10%	25V
C504	1-123-356-00	ELECT	10MF	20%	16V
C505	1-161-013-00	CERAMIC	0.01MF	10%	25V
C506	1-123-356-00	ELECT	10MF	20%	16V
C507	1-161-059-00	CERAMIC	0.047MF	10%	25V
C508	1-123-380-00	ELECT	1MF	20%	50V
C609	1-123-307-00	ELECT	100MF	20%	10V
C610	1-123-380-00	ELECT	1MF	20%	50V
C611	1-123-307-00	ELECT	100MF	20%	10V

CONNECTOR

CN101	*1-560-900-00	PIN, CONNECTOR 12P
CN102	*1-560-900-00	PIN, CONNECTOR 12P
CN103	*1-560-893-00	PIN, CONNECTOR 5P
CN104	*1-560-898-00	PIN, CONNECTOR 10P
CN105	*1-564-011-11	PIN, CONNECTOR 12P
CN106	*1-560-891-00	PIN, CONNECTOR 3P
CN107	*1-560-891-00	PIN, CONNECTOR 3P
CN108	*1-564-007-00	PIN, CONNECTOR 8P
CN109	*1-560-890-00	PIN, CONNECTOR 2P
CN110	1-562-732-11	SOCKET 5P
CN111	*1-560-896-00	PIN, CONNECTOR 8P
CN112	1-507-678-21	JACK

Ref.No	Part No.	Description	Remark
CN113	*1-564-003-00	PIN, CONNECTOR 4P	
CN114	*1-560-892-00	PIN, CONNECTOR 4P	
CN301	*1-560-896-00	PIN, CONNECTOR 8P	
CN302	*1-560-894-00	PIN, CONNECTOR 6P	
CN303	*1-560-892-00	PIN, CONNECTOR 4P	
CN304	*1-560-896-00	PIN, CONNECTOR 8P	
CN305	*1-560-892-00	PIN, CONNECTOR 4P	
CN306	*1-560-890-00	PIN, CONNECTOR 2P	
CN307	*1-560-891-00	PIN, CONNECTOR 3P	
CN308	*1-560-891-00	PIN, CONNECTOR 3P	
CN309	*1-560-890-00	PIN, CONNECTOR 2P	

DIODE

D101	8-719-200-02	DIODE 10E-2	
D102	8-719-000-04	DIODE MC911	
D104	8-719-100-71	DIODE RD15E-B2	
D105	8-719-100-71	DIODE RD15E-B2	
D106	8-719-100-71	DIODE RD15E-B2	
D107	8-719-000-06	DIODE MC921	
D110	8-719-911-19	DIODE 1SS119	
D111	8-719-200-23	DIODE 11E2	
D112	8-719-911-19	DIODE 1SS119	
D120	8-719-911-19	DIODE 1SS119	
D121	8-719-911-19	DIODE 1SS119	
D122	8-719-911-19	DIODE 1SS119	
D301	8-719-911-19	DIODE 1SS119	
D302	8-719-911-19	DIODE 1SS119	
D303	8-719-911-19	DIODE 1SS119	
D304	8-719-000-06	DIODE MC921	
D305	8-719-000-06	DIODE MC921	
D306	8-719-000-06	DIODE MC921	
D307	8-719-000-06	DIODE MC921	
D308	8-719-911-19	DIODE 1SS119	
D309	8-719-000-06	DIODE MC921	
D310	8-719-000-06	DIODE MC921	
D311	8-719-911-19	DIODE 1SS119	
D312	8-719-200-02	DIODE 10E-2	
D313	8-719-191-07	DIODE RD9.1E-B	
D314	8-719-101-34	DIODE RD3.0EL1	
D315	8-719-911-19	DIODE 1SS119	
D316	8-719-911-19	DIODE 1SS119	
D317	8-719-911-19	DIODE 1SS119	
D318	8-719-911-19	DIODE 1SS119	
D320	8-719-000-06	DIODE MC921	
D321	8-719-911-19	DIODE 1SS119	
D322	8-719-911-19	DIODE 1SS119	
D323	8-719-911-19	DIODE 1SS119	
D610	8-719-911-19	DIODE 1SS119	

IC

IC101	8-759-924-61	IC MB88551-181M
IC102	8-759-602-75	IC M50761-696P
IC103	8-759-105-55	IC UPD7508HG-537-22

When indicating parts by reference number, please include the board name.

SS-50

Ref.No	Part No.	Description	Remark
IC104	8-759-921-02	IC MB89005-104	
IC105	8-759-920-94	IC MSM6411B-19RS	
IC106	8-759-240-53	IC TC4053BP	
IC108	8-759-801-60	IC LB1640N	
IC109	8-759-801-60	IC LB1640N	
IC110	8-759-135-80	IC UPC358C	
IC301	8-752-012-41	IC CX20124A	
IC302	8-752-006-90	IC CX20069	
IC304	8-759-240-51	IC TC4051BP	
IC305	8-759-100-06	IC UPC4556C	
IC306	8-759-240-13	IC TC4013BP	
IC307	8-759-135-80	IC UPC358C	
IC308	8-759-132-40	IC UPC324C	
IC309	8-759-240-66	IC TC4066BP	
IC310	8-759-240-53	IC TC4053BP	
IC501	8-759-918-61	IC MB88201-191G	
IC602	8-759-240-53	IC TC4053BP	

COIL

L101	1-408-412-00	MICRO INDUCTOR 18UH	
L102	1-407-705-00	MICRO INDUCTOR 100UH	
L103	1-407-705-00	MICRO INDUCTOR 100UH	
L501	1-408-421-00	MICRO INDUCTOR 100UH	
L502	1-408-417-00	MICRO INDUCTOR 47UH	

IC LINK

PS101⚠	1-532-637-00	LINK, IC	
PS301⚠	1-532-727-11	LINK, IC	
PS302⚠	1-532-727-11	LINK, IC	
PS303⚠	1-532-727-11	LINK, IC	

TRANSISTOR

Q101	8-729-900-89	TRANSISTOR DTC144ES	
Q102	8-729-900-65	TRANSISTOR DTA144ES	
Q103	8-729-900-89	TRANSISTOR DTC144ES	
Q104	8-729-900-89	TRANSISTOR DTC144ES	
Q105	8-729-900-89	TRANSISTOR DTC144ES	
Q106	8-729-204-83	TRANSISTOR 2SA1048	
Q109	8-729-900-89	TRANSISTOR DTC144ES	
Q111	8-729-900-89	TRANSISTOR DTC144ES	
Q112	8-729-900-89	TRANSISTOR DTC144ES	
Q113	8-729-245-83	TRANSISTOR 2SC2458	
Q114	8-729-245-83	TRANSISTOR 2SC2458	
Q117	8-729-204-83	TRANSISTOR 2SA1048	
Q118	8-729-113-32	TRANSISTOR 2SB733	
Q119	8-729-204-83	TRANSISTOR 2SA1048	
Q120	8-729-900-80	TRANSISTOR DTC114ES	
Q121	8-729-900-89	TRANSISTOR DTC144ES	
Q122	8-729-900-89	TRANSISTOR DTC144ES	
Q301	8-729-900-89	TRANSISTOR DTC144ES	
Q302	8-729-900-89	TRANSISTOR DTC144ES	
Q303	8-729-900-89	TRANSISTOR DTC144ES	
Q304	8-729-900-89	TRANSISTOR DTC144ES	

The components identified by shading and mark ⚠ are critical for safety. Replace only with part number specified.

When indicating parts by reference number, please include the board name.

Ref.No	Part No.	Description	Remark
Q305	8-729-245-83	TRANSISTOR 2SC2458	
Q306	8-729-245-83	TRANSISTOR 2SC2458	
Q307	8-729-204-83	TRANSISTOR 2SA1048	
Q308	8-729-245-83	TRANSISTOR 2SC2458	
Q309	8-729-177-32	TRANSISTOR 2SD773	
Q310	8-729-900-89	TRANSISTOR DTC144ES	
Q311	8-729-900-89	TRANSISTOR DTC144ES	
Q312	8-729-245-83	TRANSISTOR 2SC2458	
Q313	8-729-204-83	TRANSISTOR 2SA1048	
Q314	8-729-900-89	TRANSISTOR DTC144ES	
Q315	8-729-831-33	TRANSISTOR 2SD313HP	
Q316	8-729-247-33	TRANSISTOR 2SA473	
Q317	8-729-900-65	TRANSISTOR DTA144ES	
Q318	8-729-900-89	TRANSISTOR DTC144ES	
Q319	8-729-900-80	TRANSISTOR DTC114ES	
Q320	8-729-245-83	TRANSISTOR 2SC2458	
Q321	8-729-245-83	TRANSISTOR 2SC2458	
Q322	8-729-245-83	TRANSISTOR 2SC2458	
Q323	8-729-900-89	TRANSISTOR DTC144ES	
Q324	8-729-245-83	TRANSISTOR 2SC2458	
Q325	8-729-831-33	TRANSISTOR 2SD313HP	
Q326	8-729-900-89	TRANSISTOR DTC144ES	
Q327	8-729-900-89	TRANSISTOR DTC144ES	
Q328	8-729-245-83	TRANSISTOR 2SC2458	
Q329	8-729-204-83	TRANSISTOR 2SA1048	
Q330	8-729-245-83	TRANSISTOR 2SC2458	
Q331	8-729-900-89	TRANSISTOR DTC144ES	
Q333	8-729-204-83	TRANSISTOR 2SA1048	
Q334	8-729-245-83	TRANSISTOR 2SC2458	
Q335	8-729-900-89	TRANSISTOR DTC144ES	
Q336	8-729-245-83	TRANSISTOR 2SC2458	
Q337	8-729-900-89	TRANSISTOR DTC144ES	
Q338	8-729-177-32	TRANSISTOR 2SD773	
Q339	8-729-900-89	TRANSISTOR DTC144ES	
Q340	8-729-900-89	TRANSISTOR DTC144ES	
Q341	8-729-900-89	TRANSISTOR DTC144ES	
Q342	8-729-900-65	TRANSISTOR DTA144ES	
Q343	8-729-900-89	TRANSISTOR DTC144ES	
Q344	8-729-900-89	TRANSISTOR DTC144ES	
Q345	8-729-113-32	TRANSISTOR 2SB733	
Q346	8-729-204-83	TRANSISTOR 2SA1048	
Q350	8-729-900-89	TRANSISTOR DTC144ES	
Q351	8-729-900-89	TRANSISTOR DTC144ES	
Q355	8-729-900-89	TRANSISTOR DTC144ES	
Q356	8-729-204-83	TRANSISTOR 2SA1048	
Q357	8-729-204-83	TRANSISTOR 2SA1048	
Q358	8-729-245-83	TRANSISTOR 2SC2458	
Q359	8-729-245-83	TRANSISTOR 2SC2458	
Q360	8-729-900-65	TRANSISTOR DTA144ES	
Q361	8-729-900-89	TRANSISTOR DTC144ES	
Q362	8-729-900-89	TRANSISTOR DTC144ES	
Q363	8-729-245-83	TRANSISTOR 2SC2458	
Q364	8-729-900-89	TRANSISTOR DTC144ES	

Ref.No	Part No.	Description				Remark
Q365	8-729-900-89	TRANSISTOR DTC144ES				
Q366	8-729-245-83	TRANSISTOR 2SC2458				
Q367	8-729-900-89	TRANSISTOR DTC144ES				
Q501	8-729-245-83	TRANSISTOR 2SC2458				
Q612	8-729-900-89	TRANSISTOR DTC144ES				
Q613	8-729-900-89	TRANSISTOR DTC144ES				
Q614	8-729-900-89	TRANSISTOR DTC144ES				
		RESISTOR				
R105	1-249-429-11	CARBON	10K	5%	1/6W	
R106	1-249-429-11	CARBON	10K	5%	1/6W	
R107	1-249-429-11	CARBON	10K	5%	1/6W	
R108	1-249-429-11	CARBON	10K	5%	1/6W	
R110	1-247-843-00	CARBON	3.3K	5%	1/6W	
R111	1-247-903-00	CARBON	1M	5%	1/6W	
R113	1-247-879-00	CARBON	100K	5%	1/6W	
R114	1-247-843-00	CARBON	3.3K	5%	1/6W	
R115	1-247-843-00	CARBON	3.3K	5%	1/6W	
R116	1-247-843-00	CARBON	3.3K	5%	1/6W	
R117	1-247-843-00	CARBON	3.3K	5%	1/6W	
R119	1-249-429-11	CARBON	10K	5%	1/6W	
R120	1-249-429-11	CARBON	10K	5%	1/6W	
R121	1-249-429-11	CARBON	10K	5%	1/6W	
R122	1-249-429-11	CARBON	10K	5%	1/6W	
R123	1-249-429-11	CARBON	10K	5%	1/6W	
R127	1-247-887-00	CARBON	220K	5%	1/6W	
R128	1-247-901-00	CARBON	820K	5%	1/6W	
R129	1-249-429-11	CARBON	10K	5%	1/6W	
R130	1-247-821-00	CARBON	390	5%	1/6W	
R131	1-247-898-00	CARBON	620K	5%	1/6W	
R132	1-249-429-11	CARBON	10K	5%	1/6W	
R133	1-249-414-11	CARBON	560	5%	1/6W	
R134	1-249-414-11	CARBON	560	5%	1/6W	
R135	1-249-429-11	CARBON	10K	5%	1/6W	
R136	1-249-429-11	CARBON	10K	5%	1/6W	
R137	1-249-421-11	CARBON	2.2K	5%	1/6W	
R138	1-249-429-11	CARBON	10K	5%	1/6W	
R139	1-249-421-11	CARBON	2.2K	5%	1/6W	
R142	1-249-419-11	CARBON	1.5K	5%	1/6W	
R143	⚠ 1-247-831-00	CARBON	1K	5%	1/6W	
R146	1-247-831-00	CARBON	1K	5%	1/6W	
R147	1-247-831-00	CARBON	1K	5%	1/6W	
R148	1-247-831-00	CARBON	1K	5%	1/6W	
R149	1-247-779-00	CARBON	6.8	5%	1/6W	
R150	1-247-851-00	CARBON	6.8K	5%	1/6W	
R151	1-247-851-00	CARBON	6.8K	5%	1/6W	
R160	1-247-841-00	CARBON	2.7K	5%	1/6W	
R161	1-249-429-11	CARBON	10K	5%	1/6W	
R170	1-249-421-11	CARBON	2.2K	5%	1/6W	
R171	1-249-429-11	CARBON	10K	5%	1/6W	
R172	1-249-429-11	CARBON	10K	5%	1/6W	
R175	1-249-425-11	CARBON	4.7K	5%	1/6W	
R176	1-249-425-11	CARBON	4.7K	5%	1/6W	

Ref.No	Part No.	Description				Remark
R301	1-249-421-11	CARBON	2.2K	5%	1/6W	
R302	1-247-847-00	CARBON	4.7K	5%	1/6W	
R304	1-247-883-00	CARBON	150K	5%	1/6W	
R305	1-249-429-11	CARBON	10K	5%	1/6W	
R306	1-247-869-00	CARBON	39K	5%	1/6W	
R307	1-247-877-00	CARBON	82K	5%	1/6W	
R308	1-247-877-00	CARBON	82K	5%	1/6W	
R309	1-247-885-00	CARBON	180K	5%	1/6W	
R311	1-247-883-00	CARBON	150K	5%	1/6W	
R312	1-249-429-11	CARBON	10K	5%	1/6W	
R313	1-247-841-00	CARBON	2.7K	5%	1/6W	
R314	1-215-467-00	METAL	82K	1%	1/6W	
R315	1-215-400-00	METAL	130	1%	1/6W	
R316	1-215-400-00	METAL	130	1%	1/6W	
R317	1-215-420-00	METAL	910	1%	1/6W	
R318	1-215-433-00	METAL	3.3K	1%	1/6W	
R319	1-249-437-11	CARBON	47K	5%	1/6W	
R320	1-249-421-11	CARBON	2.2K	5%	1/6W	
R321	1-249-429-11	CARBON	10K	5%	1/6W	
R322	1-247-859-00	CARBON	15K	5%	1/6W	
R323	1-249-437-11	CARBON	47K	5%	1/6W	
R324	1-249-437-11	CARBON	47K	5%	1/6W	
R325	1-247-879-00	CARBON	100K	5%	1/6W	
R326	1-247-863-00	CARBON	22K	5%	1/6W	
R329	1-215-485-00	METAL	470K	1%	1/6W	
R330	1-215-485-00	METAL	470K	1%	1/6W	
R331	1-247-889-00	CARBON	270K	5%	1/6W	
R332	1-247-889-00	CARBON	270K	5%	1/6W	
R333	1-247-879-00	CARBON	100K	5%	1/6W	
R334	1-247-867-00	CARBON	33K	5%	1/6W	
R335	1-247-859-00	CARBON	15K	5%	1/6W	
R336	1-249-429-11	CARBON	10K	5%	1/6W	
R337	1-249-429-11	CARBON	10K	5%	1/6W	
R338	1-247-881-00	CARBON	120K	5%	1/6W	
R339	1-247-867-00	CARBON	33K	5%	1/6W	
R340	1-249-437-11	CARBON	47K	5%	1/6W	
R341	1-247-879-00	CARBON	100K	5%	1/6W	
R343	1-247-831-00	CARBON	1K	5%	1/6W	
R344	1-249-425-11	CARBON	4.7K	5%	1/6W	
R345	1-247-873-00	CARBON	56K	5%	1/6W	
R346	1-249-437-11	CARBON	47K	5%	1/6W	
R347	1-247-863-00	CARBON	22K	5%	1/6W	
R348	1-247-881-00	CARBON	120K	5%	1/6W	
R349	1-247-807-00	CARBON	100	5%	1/6W	
R350	1-247-903-00	CARBON	1M	5%	1/6W	
R351	⚠ 1-212-356-00	METAL OXIDE	0.47	5%	1W F	
R352	1-247-861-00	CARBON	18K	5%	1/6W	
R353	1-249-429-11	CARBON	10K	5%	1/6W	
R354	1-247-861-00	CARBON	18K	5%	1/6W	
R355	1-247-879-00	CARBON	100K	5%	1/6W	
R356	1-249-437-11	CARBON	47K	5%	1/6W	
R357	1-249-434-11	CARBON	27K	5%	1/6W	
R358	1-247-867-00	CARBON	33K	5%	1/6W	

The components identified by shading and mark ⚠ are critical for safety. Replace only with part number specified.

When indicating parts by reference number, please include the board name.

SS-50

Ref.No	Part No.	Description				Remark
R359	1-247-867-00	CARBON	33K	5%	1/6W	
R360	1-247-831-00	CARBON	1K	5%	1/6W	
R361	1-247-867-00	CARBON	33K	5%	1/6W	
R362	1-249-429-11	CARBON	10K	5%	1/6W	
R363	1-247-867-00	CARBON	33K	5%	1/6W	
R364	1-247-807-00	CARBON	100	5%	1/6W	
R365 ⚠	1-212-360-00	METAL OXIDE	1	5%	1W	F
R366	1-247-831-00	CARBON	1K	5%	1/6W	
R367 ⚠	1-212-368-00	METAL OXIDE	4.7	5%	1W	F
R368	1-247-833-00	CARBON	1.2K	5%	1/6W	
R369	1-247-833-00	CARBON	1.2K	5%	1/6W	
R370	1-247-847-00	CARBON	4.7K	5%	1/6W	
R371	1-247-847-00	CARBON	4.7K	5%	1/6W	
R372	1-247-831-00	CARBON	1K	5%	1/6W	
R373	1-249-429-11	CARBON	10K	5%	1/6W	
R374	1-247-859-00	CARBON	15K	5%	1/6W	
R375	1-247-879-00	CARBON	100K	5%	1/6W	
R376	1-247-895-00	CARBON	470K	5%	1/6W	
R377	1-249-437-11	CARBON	47K	5%	1/6W	
R378	1-247-879-00	CARBON	100K	5%	1/6W	
R379	1-249-429-11	CARBON	10K	5%	1/6W	
R380	1-249-437-11	CARBON	47K	5%	1/6W	
R381	1-247-863-00	CARBON	22K	5%	1/6W	
R382	1-215-485-00	METAL	470K	1%	1/6W	
R383	1-215-457-00	METAL	33K	1%	1/6W	
R384	1-247-837-00	CARBON	1.8K	5%	1/6W	
R385	1-247-869-00	CARBON	39K	5%	1/6W	
R388	1-247-891-00	CARBON	330K	5%	1/6W	
R389	1-247-903-00	CARBON	1M	5%	1/6W	
R390	1-247-831-00	CARBON	1K	5%	1/6W	
R391	1-249-419-11	CARBON	1.5K	5%	1/6W	
R392	1-249-429-11	CARBON	10K	5%	1/6W	
R393	1-247-859-00	CARBON	15K	5%	1/6W	
R394	1-247-879-00	CARBON	100K	5%	1/6W	
R395	1-247-883-00	CARBON	150K	5%	1/6W	
R396	1-247-859-00	CARBON	15K	5%	1/6W	
R397	1-247-867-00	CARBON	33K	5%	1/6W	
R398	1-247-867-00	CARBON	33K	5%	1/6W	
R399	1-247-850-00	CARBON	6.2K	5%	1/6W	
R400	1-247-903-00	CARBON	1M	5%	1/6W	
R401	1-247-879-00	CARBON	100K	5%	1/6W	
R402	1-247-889-00	CARBON	270K	5%	1/6W	
R403	1-247-895-00	CARBON	470K	5%	1/6W	
R404	1-249-437-11	CARBON	47K	5%	1/6W	
R405	1-247-861-00	CARBON	18K	5%	1/6W	
R406	1-247-859-00	CARBON	15K	5%	1/6W	
R407	1-247-831-00	CARBON	1K	5%	1/6W	
R408	1-247-863-00	CARBON	22K	5%	1/6W	
R409	1-247-863-00	CARBON	22K	5%	1/6W	
R410	1-247-867-00	CARBON	33K	5%	1/6W	
R413	1-249-437-11	CARBON	47K	5%	1/6W	
R415	1-249-437-11	CARBON	47K	5%	1/6W	
R417	1-247-857-00	CARBON	12K	5%	1/6W	

Ref.No	Part No.	Description				Remark
R418	1-247-859-00	CARBON	15K	5%	1/6W	
R419	1-249-421-11	CARBON	2.2K	5%	1/6W	
R420	1-249-437-11	CARBON	47K	5%	1/6W	
R421	1-247-843-00	CARBON	3.3K	5%	1/6W	
R422	1-249-429-11	CARBON	10K	5%	1/6W	
R425	1-249-437-11	CARBON	47K	5%	1/6W	
R426	1-249-437-11	CARBON	47K	5%	1/6W	
R427	1-247-859-00	CARBON	15K	5%	1/6W	
R428	1-249-434-11	CARBON	27K	5%	1/6W	
R429	1-249-429-11	CARBON	10K	5%	1/6W	
R430	1-247-831-00	CARBON	1K	5%	1/6W	
R431	1-249-429-11	CARBON	10K	5%	1/6W	
R440	1-247-877-00	CARBON	82K	5%	1/6W	
R442	1-249-437-11	CARBON	47K	5%	1/6W	
R443	1-249-437-11	CARBON	47K	5%	1/6W	
R448 ⚠	1-247-815-00	CARBON	220	5%	1/6W	
R449	1-247-851-00	CARBON	6.8K	5%	1/6W	
R450	1-249-437-11	CARBON	47K	5%	1/6W	
R451	1-249-429-11	CARBON	10K	5%	1/6W	
R452	1-249-437-11	CARBON	47K	5%	1/6W	
R453	1-247-867-00	CARBON	33K	5%	1/6W	
R454	1-249-437-11	CARBON	47K	5%	1/6W	
R455	1-249-437-11	CARBON	47K	5%	1/6W	
R456	1-247-879-00	CARBON	100K	5%	1/6W	
R457	1-249-437-11	CARBON	47K	5%	1/6W	
R458	1-249-429-11	CARBON	10K	5%	1/6W	
R459	1-249-421-11	CARBON	2.2K	5%	1/6W	
R460	1-247-859-00	CARBON	15K	5%	1/6W	
R461	1-247-863-00	CARBON	22K	5%	1/6W	
R462	1-247-891-00	CARBON	330K	5%	1/6W	
R464	1-249-437-11	CARBON	47K	5%	1/6W	
R465	1-249-429-11	CARBON	10K	5%	1/6W	
R466	1-247-837-00	CARBON	1.8K	5%	1/6W	
R467	1-247-831-00	CARBON	1K	5%	1/6W	
R468	1-249-419-11	CARBON	1.5K	5%	1/6W	
R470	1-247-843-00	CARBON	3.3K	5%	1/6W	
R471	1-247-861-00	CARBON	18K	5%	1/6W	
R472	1-247-903-00	CARBON	1M	5%	1/6W	
R473	1-247-903-00	CARBON	1M	5%	1/6W	
R474	1-247-849-00	CARBON	5.6K	5%	1/6W	
R475	1-249-469-11	CARBON	100K	5%	1/4W	
R480	1-249-429-11	CARBON	10K	5%	1/6W	
R482	1-247-862-00	CARBON	20K	5%	1/6W	
R483	1-247-859-00	CARBON	15K	5%	1/6W	
R484	1-249-425-11	CARBON	4.7K	5%	1/6W	
R486	1-249-437-11	CARBON	47K	5%	1/6W	
R487	1-249-437-11	CARBON	47K	5%	1/6W	
R488	1-247-887-00	CARBON	220K	5%	1/6W	
R490	1-247-847-00	CARBON	4.7K	5%	1/6W	
R491	1-249-437-11	CARBON	47K	5%	1/6W	
R492	1-249-437-11	CARBON	47K	5%	1/6W	
R501	1-249-437-11	CARBON	47K	5%	1/6W	
R502	1-247-859-00	CARBON	15K	5%	1/6W	

The components identified by shading and mark ⚠ are critical for safety. Replace only with part number specified.

When indicating parts by reference number, please include the board name.

Ref.No	Part No.	Description				Remark
R503	1-249-421-11	CARBON	2.2K	5%	1/6W	
R504	1-247-803-00	CARBON	68	5%	1/6W	
R505	1-247-831-00	CARBON	1K	5%	1/6W	
R506	1-249-429-11	CARBON	10K	5%	1/6W	
R507	1-249-429-11	CARBON	10K	5%	1/6W	
R508	1-247-879-00	CARBON	100K	5%	1/6W	
R509	1-247-879-00	CARBON	100K	5%	1/6W	
R510	1-247-843-00	CARBON	3.3K	5%	1/6W	
R511	1-249-429-11	CARBON	10K	5%	1/6W	
R512	1-249-429-11	CARBON	10K	5%	1/6W	
R513	1-249-429-11	CARBON	10K	5%	1/6W	
R623	1-249-421-11	CARBON	2.2K	5%	1/6W	
R624	1-249-437-11	CARBON	47K	5%	1/6W	
R625	1-249-437-11	CARBON	47K	5%	1/6W	
R626	1-249-437-11	CARBON	47K	5%	1/6W	
R630	1-249-419-11	CARBON	1.5K	5%	1/6W	
R632	1-247-815-00	CARBON	220	5%	1/6W	

VARIABLE RESISTOR

RV101	1-228-991-00	RES, ADJ, CARBON 2.2K
RV102	1-228-270-00	RES, VAR, CARBON 10K
RV104	1-228-995-00	RES, ADJ, CARBON 22K
RV301	1-228-997-00	RES, ADJ, CARBON 100K
RV302	1-228-995-00	RES, ADJ, CARBON 22K
RV303	1-228-997-00	RES, ADJ, CARBON 100K
RV304	1-228-997-00	RES, ADJ, CARBON 100K
RV305	1-228-997-00	RES, ADJ, METAL GLAZE 100K
RV306	1-228-996-00	RES, ADJ, METAL GLAZE 47K
RV307	1-228-992-11	RES, ADJ, METAL GLAZE 3.3K
RV308	1-228-997-00	RES, ADJ, METAL GLAZE 100K
RV601	1-228-993-00	RES, ADJ, CARBON 4.7K
RV602	1-228-993-00	RES, ADJ, CARBON 4.7K
RV603	1-228-993-00	RES, ADJ, CARBON 4.7K
RV604	1-228-993-00	RES, ADJ, CARBON 4.7K

CRYSTAL

X101	1-527-726-00	VIBRATOR, CRYSTAL
X102	1-527-965-00	OSCILLATOR, CERAMIC
X103	1-527-822-00	OSCILLATOR, CERAMIC

****

*A-6717-408-A DR-33 BOARD, COMPLETE
****

*3-683-631-01 CLAMP

CAPACITOR

C001	1-123-381-00	ELECT	2.2MF	20%	50V
C002	1-123-381-00	ELECT	2.2MF	20%	50V
C005	1-161-059-00	CERAMIC	0.047MF	10%	25V
C006	1-129-794-00	FILM	0.003MF	5%	100V
C007	1-129-794-00	FILM	0.003MF	5%	100V
C008	1-161-059-00	CERAMIC	0.047MF	10%	25V
C009	1-161-059-00	CERAMIC	0.047MF	10%	25V
C010	1-123-330-00	ELECT	22MF	20%	16V
C011	1-102-973-00	CERAMIC	100PF	5%	50V
C012	1-161-059-00	CERAMIC	0.047MF	10%	25V
C013	1-161-013-00	CERAMIC	0.01MF	10%	25V
C014	1-161-013-00	CERAMIC	0.01MF	10%	25V

CONNECTOR

CN001	*1-564-010-11	PIN, CONNECTOR 11P
CN002	*1-560-892-00	PIN, CONNECTOR 4P
CN003	*1-560-891-00	PIN, CONNECTOR 3P
CN004	*1-564-009-00	PIN, CONNECTOR 10P
CN005	*1-560-892-00	PIN, CONNECTOR 4P
CN006	*1-560-890-00	PIN, CONNECTOR 2P
CN007	*1-560-891-00	PIN, CONNECTOR 3P
CN008	*1-560-890-00	PIN, CONNECTOR 2P
CN010	*1-560-468-00	PIN, CONNECTOR 5P
CN011	*1-560-466-00	PIN, CONNECTOR 3P
CN012	*1-560-891-00	PIN, CONNECTOR 3P
CN013	*1-564-005-00	PIN, CONNECTOR 6P
CN014	*1-564-005-00	PIN, CONNECTOR 6P
CN015	*1-564-003-00	PIN, CONNECTOR 4P
CN017	*1-560-900-00	PIN, CONNECTOR 12P
CN018	*1-564-011-11	PIN, CONNECTOR 12P
CN019	*1-564-011-11	PIN, CONNECTOR 12P
CN020	*1-564-010-11	PIN, CONNECTOR 11P

IC

IC002	8-759-800-72	IC LA7205

RESISTOR

R001	1-247-831-00	CARBON	1K	5%	1/6W
R002	1-247-815-00	CARBON	220	5%	1/6W
R003	1-247-831-00	CARBON	1K	5%	1/6W
R004	1-247-815-00	CARBON	220	5%	1/6W
R019	1-247-861-00	CARBON	18K	5%	1/6W
R020	1-247-862-00	CARBON	20K	5%	1/6W
R021	1-247-873-00	CARBON	56K	5%	1/6W

****

*A-6721-248-A TA-36 BOARD, COMPLETE (ES MODEL)
****

1-404-438-00 FILTER, SAW
*1-555-110-00 CABLE, PIN
*3-662-227-00 HOLDER (R-3), LED
3-671-893-00 CLAMP (LOW TYPE)
*3-674-390-00 HOLDER (B), LED

*3-683-631-01 CLAMP
3-701-748-00 CLAMP

When indicating parts by reference number, please include the board name.

TA-36

Ref.No	Part No.	Description			Remark
		BATTERY			
B701	1-528-132-00	BATTERY, STORAGE, NI-CD			
		CAPACITOR			
C001	1-102-529-00	CERAMIC	100PF	5%	50V
C002	1-102-529-00	CERAMIC	100PF	5%	50V
C003	1-102-947-00	CERAMIC	10PF	5%	50V
C004	1-102-523-00	CERAMIC	56PF	5%	50V
C005	1-102-125-00	CERAMIC	0.0047MF	10%	50V
C006	1-102-125-00	CERAMIC	0.0047MF	10%	50V
C007	1-102-125-00	CERAMIC	0.0047MF	10%	50V
C008	1-102-125-00	CERAMIC	0.0047MF	10%	50V
C009	1-102-125-00	CERAMIC	0.0047MF	10%	50V
C010	1-102-125-00	CERAMIC	0.0047MF	10%	50V
C011	1-102-125-00	CERAMIC	0.0047MF	10%	50V
C012	1-102-125-00	CERAMIC	0.0047MF	10%	50V
C013	1-123-369-00	ELECT	4.7MF	20%	25V
C014	1-102-125-00	CERAMIC	0.0047MF	10%	50V
C015	1-161-059-00	CERAMIC	0.047MF	10%	25V
C016	1-102-529-00	CERAMIC	100PF	5%	50V
C017	1-102-963-00	CERAMIC	33PF	5%	50V
C018	1-102-504-00	CERAMIC	4PF	0.25PF	50V
C019	1-102-529-00	CERAMIC	100PF	5%	50V
C020	1-102-504-00	CERAMIC	4PF	0.25PF	50V
C021	1-102-963-00	CERAMIC	33PF	5%	50V
C022	1-123-333-00	ELECT	100MF	20%	16V
C023	1-161-013-00	CERAMIC	0.01MF	10%	25V
C024	1-102-125-00	CERAMIC	0.0047MF	10%	50V
C025	1-123-379-00	ELECT	0.47MF	20%	50V
C026	1-102-973-00	CERAMIC	100PF	5%	50V
C027	1-102-125-00	CERAMIC	0.0047MF	10%	50V
C028	1-123-286-00	ELECT	0.33MF	20%	50V
C029	1-161-013-00	CERAMIC	0.01MF	10%	25V
C030	1-101-361-00	CERAMIC	150PF	5%	50V
C031	1-123-380-00	ELECT	1MF	20%	50V
C032	1-130-014-00	FILM	470PF	5%	50V
C033	1-102-525-00	CERAMIC	68PF	5%	50V
C034	1-161-055-00	CERAMIC	0.022MF	10%	25V
C035	1-161-055-00	CERAMIC	0.022MF	10%	25V
C036	1-161-055-00	CERAMIC	0.022MF	10%	25V
C037	1-123-332-00	ELECT	47MF	20%	16V
C038	1-130-478-00	MYLAR	0.0039MF	5%	50V
C039	1-130-478-00	MYLAR	0.0039MF	5%	50V
C040	1-130-478-00	MYLAR	0.0039MF	5%	50V
C041	1-123-380-00	ELECT	1MF	20%	50V
C042	1-123-380-00	ELECT	1MF	20%	50V
C043	1-123-332-00	ELECT	47MF	20%	16V
C044	1-123-356-00	ELECT	10MF	20%	16V
C045	1-123-356-00	ELECT	10MF	20%	16V
C046	1-161-059-00	CERAMIC	0.047MF	10%	25V
C047	1-123-333-00	ELECT	100MF	20%	16V
C048	1-123-308-00	ELECT	220MF	20%	10V

Ref.No	Part No.	Description			Remark
C049	1-136-147-00	FILM	0.0033MF	5%	50V
C050	1-130-014-00	FILM	470PF	5%	50V
C051	1-161-055-00	CERAMIC	0.022MF	10%	25V
C052	1-161-059-00	CERAMIC	0.047MF	10%	25V
C053	1-136-244-11	FILM	0.1MF	2%	50V
C054	1-136-244-11	FILM	0.1MF	2%	50V
C055	1-123-330-00	ELECT	22MF	20%	16V
C056	1-136-243-11	FILM	0.047MF	2%	50V
C057	1-136-243-11	FILM	0.047MF	2%	50V
C058	1-123-333-00	ELECT	100MF	20%	16V
C059	1-123-333-00	ELECT	100MF	20%	16V
C060	1-123-356-00	ELECT	10MF	20%	16V
C061	1-161-013-00	CERAMIC	0.01MF	10%	25V
C062	1-123-356-00	ELECT	10MF	20%	16V
C063	1-102-125-00	CERAMIC	0.0047MF	10%	50V
C064	1-161-013-00	CERAMIC	0.01MF	10%	25V
C065	1-102-963-00	CERAMIC	33PF	5%	50V
C066	1-130-493-00	MYLAR	0.068MF	5%	50V
C067	1-130-493-00	MYLAR	0.068MF	5%	50V
C068	1-130-495-00	MYLAR	0.1MF	5%	50V
C069	1-102-973-00	CERAMIC	100PF	5%	50V
C070	1-123-380-00	ELECT	1MF	20%	50V
C072	1-161-013-00	CERAMIC	0.01MF	10%	25V
C075	1-102-963-00	CERAMIC	33PF	5%	50V
C076	1-102-963-00	CERAMIC	33PF	5%	50V
C077	1-123-381-00	ELECT	2.2MF	20%	50V
C078	1-161-059-00	CERAMIC	0.047MF	10%	25V
C079	1-161-013-00	CERAMIC	0.01MF	10%	25V
C080	1-161-013-00	CERAMIC	0.01MF	10%	25V
C081	1-123-332-00	ELECT	47MF	20%	16V
C082	1-123-356-00	ELECT	10MF	20%	50V
C083	1-123-380-00	ELECT	1MF	20%	50V
C201	1-102-123-00	CERAMIC	0.0033MF	10%	50V
C301	1-123-356-00	ELECT	10MF	20%	50V
C401	1-123-318-00	ELECT	33MF	20%	16V
C402	1-102-121-00	CERAMIC	0.0022MF	10%	50V
C403	1-102-527-00	CERAMIC	82PF	5%	50V
C501	1-123-356-00	ELECT	10MF	20%	16V
C502	1-123-381-00	ELECT	2.2MF	20%	50V
C503	1-123-332-00	ELECT	47MF	20%	16V
C504	1-102-074-00	CERAMIC	0.001MF	10%	50V
C505	1-123-369-00	ELECT	4.7MF	20%	25V
C506	1-102-808-00	CERAMIC	6PF	1PF	50V
C508	1-102-816-00	CERAMIC	120PF	5%	50V
C511	1-123-369-00	ELECT	4.7MF	20%	25V
C512	1-123-332-00	ELECT	47MF	20%	16V
C513	1-161-013-00	CERAMIC	0.01MF	10%	25V
C601	1-101-004-00	CERAMIC	0.01MF		50V
C602	1-101-004-00	CERAMIC	0.01MF		50V
C603	1-123-356-00	ELECT	10MF	20%	16V
C604	1-123-382-00	ELECT	3.3MF	20%	50V
C605	1-101-001-00	CERAMIC	0.001MF		50V
C606	1-101-004-00	CERAMIC	0.01MF		50V

When indicating parts by reference number, please include the board name.

TA-36

Ref.No	Part No.	Description			Remark
C608	1-123-380-00	ELECT	1MF	20%	50V
C701	1-123-330-00	ELECT	22MF	20%	16V
C702	1-123-330-00	ELECT	22MF	20%	16V
C703	1-102-121-00	CERAMIC	0.0022MF	10%	50V
C704	1-123-381-00	ELECT	2.2MF	20%	50V
C705	1-123-330-00	ELECT	22MF	20%	16V
C706	1-123-308-00	ELECT	220MF	20%	10V
C800	1-101-004-00	CERAMIC	0.01MF		50V
C801	1-130-483-00	MYLAR	0.01MF	5%	50V
C802	1-136-164-00	MYLAR	0.082MF	5%	50V
C803	1-101-004-00	CERAMIC	0.01MF		50V
C804	1-123-608-00	ELECT	0.22MF	20%	50V
C805	1-123-332-00	ELECT	47MF	20%	16V
C806	1-123-608-00	ELECT	0.22MF	20%	50V
C901	1-123-332-00	ELECT	47MF	20%	16V
C902	1-102-111-00	CERAMIC	270PF	10%	50V
C903	1-130-474-00	MYLAR	0.0018MF	5%	50V
C904	1-123-332-00	ELECT	47MF	20%	16V
C905	1-123-332-00	ELECT	47MF	20%	16V
C906	1-123-369-00	ELECT	4.7MF	20%	25V
C907	1-130-473-00	MYLAR	0.0015MF	5%	50V
C908	1-130-483-00	MYLAR	0.01MF	5%	50V
C909	1-123-381-00	ELECT	2.2MF	20%	50V
C910	1-123-332-00	ELECT	47MF	20%	16V
C911	1-102-978-00	CERAMIC	220PF	5%	50V
C912	1-123-332-00	ELECT	47MF	20%	16V
C913	1-123-356-00	ELECT	10MF	20%	16V
C914	1-123-330-00	ELECT	22MF	20%	16V
C915	1-123-379-00	ELECT	0.47MF	20%	50V
C916	1-123-332-00	ELECT	47MF	20%	16V
C917	1-130-481-00	MYLAR	0.0068MF	5%	50V
C918	1-123-356-00	ELECT	10MF	20%	16V
C919	1-130-477-00	MYLAR	0.0033MF	5%	50V
C920	1-130-479-00	MYLAR	0.0047MF	5%	50V
C921	1-123-332-00	ELECT	47MF	20%	16V
C922	1-136-215-00	FILM	0.0068MF	10%	400V
C923	1-107-080-00	MICA	62PF	5%	50V
C951	1-123-332-00	ELECT	47MF	20%	16V

FILTER

CF001	1-527-840-00	FILTER, CERAMIC
CF002	1-527-839-00	FILTER, CERAMIC
CF003	1-527-822-00	OSCILLATOR, CERAMIC

CONNECTOR

CN001	*1-560-891-00	PIN, CONNECTOR 3P
CN002	*1-560-896-00	PIN, CONNECTOR 8P
CN003	*1-560-894-00	PIN, CONNECTOR 6P
CN004	*1-560-900-00	PIN, CONNECTOR 12P
CN501	*1-560-892-00	PIN, CONNECTOR 4P
CN502	*1-560-896-00	PIN, CONNECTOR 8P
CN901	*1-564-030-00	PIN, CONNECTOR 5P
CN902	*1-564-033-00	PIN, CONNECTOR 8P

Ref.No	Part No.	Description	Remark

TRIMMER

CT001	1-404-134-00	TRAP, CERAMIC (5.5MHZ)

DIODE

D001	8-719-911-19	DIODE 1SS119
D003	8-719-911-19	DIODE 1SS119
D004	8-719-911-19	DIODE 1SS119
D005	8-719-812-33	DIODE TLG123A
D006	8-719-812-32	DIODE TLY123
D007	8-719-812-31	DIODE TLR123
D008	8-719-000-12	DIODE MC931
D009	8-719-812-31	DIODE TLR123
D010	8-719-200-02	DIODE 10E-2
D011	8-719-911-19	DIODE 1SS119
D301	8-719-000-12	DIODE MC931
D401	8-719-000-06	DIODE MC921
D402	8-719-911-19	DIODE 1SS119
D505	8-719-911-19	DIODE 1SS119
D508	8-719-911-19	DIODE 1SS119
D601	8-719-911-19	DIODE 1SS119
D602	8-719-911-19	DIODE 1SS119
D603	8-719-911-19	DIODE 1SS119
D604	8-719-911-19	DIODE 1SS119
D605	8-719-911-19	DIODE 1SS119
D607	8-719-911-19	DIODE 1SS119
D608	8-719-911-19	DIODE 1SS119
D609	8-719-911-19	DIODE 1SS119
D701	8-719-911-19	DIODE 1SS119
D702	8-719-911-19	DIODE 1SS119
D703	8-719-100-31	DIODE RD5.1EB3
D704	8-719-911-19	DIODE 1SS119
D705	8-719-911-19	DIODE 1SS119
D706	8-719-911-19	DIODE 1SS119
D707	8-719-911-19	DIODE 1SS119
D800	8-719-911-19	DIODE 1SS119
D801	8-719-911-19	DIODE 1SS119
D901	8-719-000-06	DIODE MC921
D902	8-719-911-19	DIODE 1SS119

IC

IC001	8-759-276-07	IC TA7607AP
IC002	8-759-909-54	IC TDA2546A
IC003	8-759-913-15	IC TDA3800GS
IC004	8-759-145-58	IC UPC4558C
IC005	8-759-602-16	IC M54572L
IC006	8-759-157-40	IC UPC574J
IC007	8-759-603-11	IC M50160-115SP
IC008	8-759-600-66	IC M58653P
IC009	8-759-105-50	IC UPD7507SC-068
IC601	8-759-205-76	IC TC504013BP
IC901	8-759-101-73	IC UPC1513HA
IC902	8-759-802-11	IC LA7091

When indicating parts by reference number, please include the board name.

TA-36

Ref.No	Part No.	Description	Remark
		COIL	
L001	1-408-397-00	MICRO INDUCTOR 1UH	
L002	1-408-592-41	MICRO INDUCTOR 1.2UH	
L003	1-408-406-00	MICRO INDUCTOR 5.6UH	
L004	1-408-406-00	MICRO INDUCTOR 5.6UH	
L005	1-408-604-00	MICRO INDUCTOR 12UH	
L006	1-408-408-00	MICRO INDUCTOR 8.2UH	
L007	1-408-403-00	MICRO INDUCTOR 3.3UH	
L008	1-408-397-00	MICRO INDUCTOR 1UH	
L009	1-408-421-00	MICRO INDUCTOR 100UH	
L501	1-408-421-00	MICRO INDUCTOR 100UH	
L502	1-408-417-00	MICRO INDUCTOR 47UH	
L701	1-407-168-XX	MICRO INDUCTOR 82UH	
L901	1-407-508-00	MICRO INDUCTOR 22MMH	
L902	1-407-510-00	MICRO INDUCTOR 27MMH	
L903	1-410-120-11	MICRO INDUCTOR 1.2MMH	
		VARIABLE COIL	
LV901	1-408-713-00	VARIABLE INDUCTOR	
		TRANSISTOR	
Q001	8-729-203-28	TRANSISTOR 2SC2216	
Q002	8-729-245-83	TRANSISTOR 2SC2458	
Q003	8-729-900-74	TRANSISTOR DTC143TS	
Q004	8-729-900-74	TRANSISTOR DTC143TS	
Q005 ⚠	8-729-374-02	TRANSISTOR 2SB740	
Q006	8-729-900-89	TRANSISTOR DTC144ES	
Q007	8-729-245-83	TRANSISTOR 2SC2458	
Q008	8-729-245-83	TRANSISTOR 2SC2458	
Q009	8-729-245-83	TRANSISTOR 2SC2458	
Q011	8-729-204-83	TRANSISTOR 2SA1048	
Q012	8-729-204-83	TRANSISTOR 2SA1048	
Q013	8-729-900-89	TRANSISTOR DTC144ES	
Q014	8-729-900-89	TRANSISTOR DTC144ES	
Q015	8-729-900-89	TRANSISTOR DTC144ES	
Q201	8-729-204-83	TRANSISTOR 2SA1048	
Q202	8-729-245-83	TRANSISTOR 2SC2458	
Q301	8-729-900-65	TRANSISTOR DTA144ES	
Q401	8-729-245-83	TRANSISTOR 2SC2458	
Q501	8-729-245-83	TRANSISTOR 2SC2458	
Q502	8-729-204-83	TRANSISTOR 2SA1048	
Q503	8-729-384-48	TRANSISTOR 2SA844	
Q504	8-729-245-83	TRANSISTOR 2SC2458	
Q505	8-729-245-83	TRANSISTOR 2SC2458	
Q506	8-729-245-83	TRANSISTOR 2SC2458	
Q507	8-729-245-83	TRANSISTOR 2SC2458	
Q508	8-729-900-80	TRANSISTOR DTC114ES	
Q509	8-729-204-83	TRANSISTOR 2SA1048	
Q601	8-729-900-89	TRANSISTOR DTC144ES	
Q602	8-729-245-83	TRANSISTOR 2SC2458	
Q603	8-729-245-83	TRANSISTOR 2SC2458	
Q605	8-729-900-89	TRANSISTOR DTC144ES	
Q606	8-729-245-83	TRANSISTOR 2SC2458	
Q607	8-729-245-83	TRANSISTOR 2SC2458	
Q608	8-729-245-83	TRANSISTOR 2SC2458	
Q609	8-729-245-83	TRANSISTOR 2SC2458	
Q610	8-729-900-89	TRANSISTOR DTC144ES	
Q701	8-729-177-32	TRANSISTOR 2SD773	
Q702	8-729-245-83	TRANSISTOR 2SC2458	
Q703	8-729-900-80	TRANSISTOR DTC114ES	
Q704	8-729-204-83	TRANSISTOR 2SA1048	
Q800	8-729-900-74	TRANSISTOR DTC143TS	
Q802	8-729-900-89	TRANSISTOR DTC144ES	
Q901	8-729-900-89	TRANSISTOR DTC144ES	
Q904	8-729-245-83	TRANSISTOR 2SC2458	
Q906	8-729-177-43	TRANSISTOR 2SD774	
Q907	8-729-245-83	TRANSISTOR 2SC2458	
		RESISTOR	
R001	1-249-421-11	CARBON 2.2K 5% 1/6W	
R002	1-247-847-00	CARBON 4.7K 5% 1/6W	
R003	1-247-815-00	CARBON 220 5% 1/6W	
R004	1-247-819-00	CARBON 330 5% 1/6W	
R005	1-247-813-00	CARBON 180 5% 1/6W	
R006	1-247-837-00	CARBON 1.8K 5% 1/6W	
R007	1-249-419-11	CARBON 1.5K 5% 1/6W	
R008	1-247-867-00	CARBON 33K 5% 1/6W	
R009	1-247-879-00	CARBON 100K 5% 1/6W	
R010	1-247-879-00	CARBON 100K 5% 1/6W	
R011	1-247-901-00	CARBON 820K 5% 1/6W	
R012	1-247-831-00	CARBON 1K 5% 1/6W	
R014	1-247-807-00	CARBON 100 5% 1/6W	
R015	1-247-817-00	CARBON 270 5% 1/6W	
R016	1-247-815-00	CARBON 220 5% 1/6W	
R017	1-247-847-00	CARBON 4.7K 5% 1/6W	
R018	1-247-829-00	CARBON 820 5% 1/6W	
R019	1-247-829-00	CARBON 820 5% 1/6W	
R020	1-247-829-00	CARBON 820 5% 1/6W	
R021	1-247-891-00	CARBON 330K 5% 1/6W	
R022	1-249-437-11	CARBON 47K 5% 1/6W	
R023	1-247-853-00	CARBON 8.2K 5% 1/6W	
R024	1-247-863-00	CARBON 22K 5% 1/6W	
R025	1-247-853-00	CARBON 8.2K 5% 1/6W	
R026	1-247-863-00	CARBON 22K 5% 1/6W	
R027	1-249-429-11	CARBON 10K 5% 1/6W	
R028	1-249-429-11	CARBON 10K 5% 1/6W	
R031	1-247-861-00	CARBON 18K 5% 1/6W	
R032	1-249-434-11	CARBON 27K 5% 1/6W	
R033	1-247-829-00	CARBON 820 5% 1/6W	
R034	1-247-831-00	CARBON 1K 5% 1/6W	
R035	1-215-487-00	METAL 560K 1% 1/6W	
R036	1-215-409-00	METAL 330 1% 1/6W	
R037	1-215-461-00	METAL 47K 1% 1/6W	
R038	1-215-460-00	METAL 43K 1% 1/6W	
R039	1-215-408-00	METAL 300 1% 1/6W	

The components identified by shading and mark ⚠ are critical for safety. Replace only with part number specified.

When indicating parts by reference number, please include the board name.

Ref.No	Part No.	Description				Remark
R040	1-215-486-00	METAL	510K	1%	1/6W	
R041	1-247-831-00	CARBON	1K	5%	1/6W	
R042	1-206-670-00	METAL OXIDE	1.8K	5%	2W	F
R043	1-247-847-00	CARBON	4.7K	5%	1/6W	
R044	1-247-831-00	CARBON	1K	5%	1/6W	
R045	1-247-833-00	CARBON	1.2K	5%	1/6W	
R046	1-249-419-11	CARBON	1.5K	5%	1/6W	
R047	1-249-421-11	CARBON	2.2K	5%	1/6W	
R048	1-247-891-00	CARBON	330K	5%	1/6W	
R049	1-247-863-00	CARBON	22K	5%	1/6W	
R050	1-247-863-00	CARBON	22K	5%	1/6W	
R051	1-247-863-00	CARBON	22K	5%	1/6W	
R052	1-247-863-00	CARBON	22K	5%	1/6W	
R053	1-247-863-00	CARBON	22K	5%	1/6W	
R054	1-247-877-00	CARBON	82K	5%	1/6W	
R055	1-247-851-00	CARBON	6.8K	5%	1/6W	
R056	1-247-843-00	CARBON	3.3K	5%	1/6W	
R058	1-247-867-00	CARBON	33K	5%	1/6W	
R059	1-247-863-00	CARBON	22K	5%	1/6W	
R060	1-247-847-00	CARBON	4.7K	5%	1/6W	
R061	1-247-863-00	CARBON	22K	5%	1/6W	
R062	1-247-867-00	CARBON	33K	5%	1/6W	
R063	1-249-429-11	CARBON	10K	5%	1/6W	
R064	1-249-429-11	CARBON	10K	5%	1/6W	
R066	1-249-429-11	CARBON	10K	5%	1/6W	
R067	1-247-903-00	CARBON	1M	5%	1/6W	
R068	1-247-831-00	CARBON	1K	5%	1/6W	
R070	1-247-853-00	CARBON	8.2K	5%	1/6W	
R071	1-249-437-11	CARBON	47K	5%	1/6W	
R072	1-249-437-11	CARBON	47K	5%	1/6W	
R073	1-249-437-11	CARBON	47K	5%	1/6W	
R074	1-247-833-00	CARBON	1.2K	5%	1/6W	
R076	1-249-421-11	CARBON	2.2K	5%	1/6W	
R077	1-247-847-00	CARBON	4.7K	5%	1/6W	
R201	1-247-819-00	CARBON	330	5%	1/6W	
R202	1-247-887-00	CARBON	220K	5%	1/6W	
R203	1-247-845-00	CARBON	3.9K	5%	1/6W	
R204	1-247-827-00	CARBON	680	5%	1/6W	
R205	1-249-414-11	CARBON	560	5%	1/6W	
R301	1-249-429-11	CARBON	10K	5%	1/6W	
R302	1-249-429-11	CARBON	10K	5%	1/6W	
R303	1-247-849-00	CARBON	5.6K	5%	1/6W	
R401	1-247-831-00	CARBON	1K	5%	1/6W	
R402	1-247-823-00	CARBON	470	5%	1/6W	
R403	1-247-867-00	CARBON	33K	5%	1/6W	
R404	1-247-831-00	CARBON	1K	5%	1/6W	
R501	1-249-429-11	CARBON	10K	5%	1/6W	
R503	1-249-414-11	CARBON	560	5%	1/6W	
R504	1-249-429-11	CARBON	10K	5%	1/6W	
R505	1-247-847-00	CARBON	4.7K	5%	1/6W	
R507	1-247-833-00	CARBON	1.2K	5%	1/6W	
R508	1-247-831-00	CARBON	1K	5%	1/6W	
R509	1-247-849-00	CARBON	5.6K	5%	1/6W	
R510	1-247-847-00	CARBON	4.7K	5%	1/6W	
R511	1-249-429-11	CARBON	10K	5%	1/6W	
R512	1-247-857-00	CARBON	12K	5%	1/6W	
R513	1-247-831-00	CARBON	1K	5%	1/6W	
R514	1-247-807-00	CARBON	100	5%	1/6W	
R516	1-247-815-00	CARBON	220	5%	1/6W	
R517	1-249-414-11	CARBON	560	5%	1/6W	
R519	1-247-815-00	CARBON	220	5%	1/6W	
R523	1-247-847-00	CARBON	4.7K	5%	1/6W	
R524	1-247-807-00	CARBON	100	5%	1/6W	
R525	1-247-831-00	CARBON	1K	5%	1/6W	
R526	1-247-837-00	CARBON	1.8K	5%	1/6W	
R527	1-247-807-00	CARBON	100	5%	1/6W	
R550	1-247-799-00	CARBON	47	5%	1/6W	
R601	1-249-429-11	CARBON	10K	5%	1/6W	
R602	1-249-429-11	CARBON	10K	5%	1/6W	
R603	1-249-429-11	CARBON	10K	5%	1/6W	
R604	1-249-429-11	CARBON	10K	5%	1/6W	
R605	1-249-429-11	CARBON	10K	5%	1/6W	
R606	1-249-429-11	CARBON	10K	5%	1/6W	
R607	1-249-429-11	CARBON	10K	5%	1/6W	
R608	1-249-434-11	CARBON	27K	5%	1/6W	
R609	1-247-849-00	CARBON	5.6K	5%	1/6W	
R610	1-247-867-00	CARBON	33K	5%	1/6W	
R611	1-247-867-00	CARBON	33K	5%	1/6W	
R612	1-247-843-00	CARBON	3.3K	5%	1/6W	
R613	1-249-429-11	CARBON	10K	5%	1/6W	
R614	1-247-861-00	CARBON	18K	5%	1/6W	
R615	1-247-869-00	CARBON	39K	5%	1/6W	
R616	1-249-421-11	CARBON	2.2K	5%	1/6W	
R617	1-249-437-11	CARBON	47K	5%	1/6W	
R618	1-249-429-11	CARBON	10K	5%	1/6W	
R619	1-247-847-00	CARBON	4.7K	5%	1/6W	
R620	1-249-429-11	CARBON	10K	5%	1/6W	
R622	1-249-429-11	CARBON	10K	5%	1/6W	
R701	1-247-791-00	CARBON	22	5%	1/6W	
R702	1-247-811-00	CARBON	150	5%	1/6W	
R703	1-247-831-00	CARBON	1K	5%	1/6W	
R704	1-247-831-00	CARBON	1K	5%	1/6W	
R705	1-247-819-00	CARBON	330	5%	1/6W	
R706	1-249-429-11	CARBON	10K	5%	1/6W	
R707	1-249-429-11	CARBON	10K	5%	1/6W	
R800	1-247-847-00	CARBON	4.7K	5%	1/6W	
R801	1-247-847-00	CARBON	4.7K	5%	1/6W	
R802	⚠ 1-212-853-00	FUSIBLE	6.8	5%	1/4W	F
R805	1-249-429-11	CARBON	10K	5%	1/6W	
R806	1-247-843-00	CARBON	3.3K	5%	1/6W	
R807	1-249-437-11	CARBON	47K	5%	1/6W	
R820	1-247-869-00	CARBON	39K	5%	1/6W	
R821	1-247-861-00	CARBON	18K	5%	1/6W	
R901	1-249-429-11	CARBON	10K	5%	1/6W	
R902	1-247-783-00	CARBON	10	5%	1/6W	
R903	1-247-859-00	CARBON	15K	5%	1/6W	

The components identified by shading and mark ⚠ are critical for safety. Replace only with part number specified.

When indicating parts by reference number, please include the board name.

TA-36 TA-37

Ref.No	Part No.	Description				Remark
R904	1-247-831-00	CARBON	1K	5%	1/6W	
R905	1-247-821-00	CARBON	390	5%	1/6W	
R906	1-247-861-00	CARBON	18K	5%	1/6W	
R907	1-247-885-00	CARBON	180K	5%	1/6W	
R908	1-249-429-11	CARBON	10K	5%	1/6W	
R909	1-247-867-00	CARBON	33K	5%	1/6W	
R912	1-247-899-00	CARBON	680K	5%	1/6W	
R913	1-247-867-00	CARBON	33K	5%	1/6W	
R914	1-247-829-00	CARBON	820	5%	1/6W	
R915	1-249-429-11	CARBON	10K	5%	1/6W	
R916	1-247-831-00	CARBON	1K	5%	1/6W	
R917	1-247-807-00	CARBON	100	5%	1/6W	
R919 ⚠	1-212-853-00	FUSIBLE	6.8	5%	1/4W	F
R921	1-247-831-00	CARBON	1K	5%	1/6W	
R922	1-247-859-00	CARBON	15K	5%	1/6W	
R923	1-247-077-00	CARBON	3.3	5%	1/4W	
R925	1-249-437-11	CARBON	47K	5%	1/6W	
R926	1-247-853-00	CARBON	8.2K	5%	1/6W	
R950	1-247-857-00	CARBON	12K	5%	1/6W	
R951	1-247-867-00	CARBON	33K	5%	1/6W	

VARIABLE RESISTOR

RV001	1-228-993-00	RES, ADJ, CARBON 4.7K
RV002	1-228-995-00	RES, ADJ, CARBON 22K
RV901	1-228-994-00	RES, ADJ, CARBON 10K
RV902	1-228-998-00	RES, ADJ, METAL GLAZE 220K

RELAY

RY901	1-515-418-00	RELAY

SWITCH

S001	1-553-997-00	SWITCH, KEY BOARD
S002	1-553-997-00	SWITCH, KEY BOARD
S003	1-553-997-00	SWITCH, KEY BOARD
S004	1-553-997-00	SWITCH, KEY BOARD
S005	1-553-997-00	SWITCH, KEY BOARD
S006	1-553-997-00	SWITCH, KEY BOARD
S007	1-553-997-00	SWITCH, KEY BOARD

TRANSFORMER

T001	1-404-068-00	COIL, VIF
T002	1-404-068-00	COIL, VIF
T003	1-404-427-00	VIFT
T004	1-404-427-00	VIFT
T005	1-404-477-00	COIL, IF
T006	1-404-465-12	COIL, VIF (MOLD TYPE)
T007	1-404-477-00	COIL, IF
T008	1-404-619-11	COIL, IF
T701	1-446-571-00	TRANSFORMER, CONVERTOR
T901	1-433-275-00	TRANSFORMER, BIAS OSCILLATOR

TUNER

TU001 ⚠	1-463-577-31	TUNER, ET (BT-883AD)

The components identified by shading and mark ⚠ are critical for safety. Replace only with part number specified.

When indicating parts by reference number, please include the board name.

Ref.No	Part No.	Description	Remark
	*A-6721-258-A	TA-37 BOARD, COMPLETE (E MODEL)	
		**********	
	*1-555-110-00	CABLE, PIN	
	*3-662-227-00	HOLDER (R-3), LED	
	3-671-893-00	CLAMP (LOW TYPE)	
	*3-674-390-00	HOLDER (B), LED	
	*3-683-631-01	CLAMP	
	3-701-748-00	CLAMP	
	*4-336-029-00	PLATE, SHIELD	

BATTERY

B701	1-528-132-00	BATTERY, STORAGE, NI-CD

CAPACITOR

C001	1-102-529-00	CERAMIC	100PF	5%	50V
C002	1-102-529-00	CERAMIC	100PF	5%	50V
C003	1-102-947-00	CERAMIC	10PF	5%	50V
C004	1-102-523-00	CERAMIC	56PF	5%	50V
C005	1-161-013-00	CERAMIC	0.01MF	10%	25V
C006	1-102-125-00	CERAMIC	0.0047MF	10%	50V
C007	1-102-125-00	CERAMIC	0.0047MF	10%	50V
C008	1-102-074-00	CERAMIC	0.001MF	10%	50V
C009	1-102-125-00	CERAMIC	0.0047MF	10%	50V
C010	1-102-125-00	CERAMIC	0.0047MF	10%	50V
C011	1-102-125-00	CERAMIC	0.0047MF	10%	50V
C012	1-102-125-00	CERAMIC	0.0047MF	10%	50V
C013	1-123-369-00	ELECT	4.7MF	20%	25V
C014	1-102-125-00	CERAMIC	0.0047MF	10%	50V
C015	1-161-059-00	CERAMIC	0.047MF	10%	25V
C016	1-102-529-00	CERAMIC	100PF	5%	50V
C017	1-102-963-00	CERAMIC	33PF	5%	50V
C018	1-102-504-00	CERAMIC	4PF	0.25PF	50V
C019	1-102-529-00	CERAMIC	100PF	5%	50V
C020	1-102-504-00	CERAMIC	4PF	0.25PF	50V
C021	1-102-963-00	CERAMIC	33PF	5%	50V
C022	1-123-333-00	ELECT	100MF	20%	16V
C023	1-161-013-00	CERAMIC	0.01MF	10%	25V
C024	1-102-125-00	CERAMIC	0.0047MF	10%	50V
C025	1-123-379-00	ELECT	0.47MF	20%	50V
C058	1-123-333-00	ELECT	100MF	20%	16V
C059	1-123-333-00	ELECT	100MF	20%	16V
C060	1-123-356-00	ELECT	10MF	20%	16V
C061	1-161-013-00	CERAMIC	0.01MF	10%	25V
C062	1-123-356-00	ELECT	10MF	20%	16V

Ref.No	Part No.	Description			Remark
C063	1-102-125-00	CERAMIC	0.0047MF	10%	50V
C064	1-161-013-00	CERAMIC	0.01MF	10%	25V
C065	1-102-963-00	CERAMIC	33PF	5%	50V
C066	1-130-493-00	MYLAR	0.068MF	5%	50V
C067	1-130-493-00	MYLAR	0.068MF	5%	50V
C068	1-130-495-00	MYLAR	0.1MF	5%	50V
C069	1-102-973-00	CERAMIC	100PF	5%	50V
C070	1-123-380-00	ELECT	1MF	20%	50V
C072	1-161-013-00	CERAMIC	0.01MF	10%	25V
C073	1-161-047-00	CERAMIC	0.0047MF	20%	25V
C074	1-102-116-00	CERAMIC	680PF	10%	50V
C075	1-102-963-00	CERAMIC	33PF	5%	50V
C076	1-102-963-00	CERAMIC	33PF	5%	50V
C077	1-123-381-00	ELECT	2.2MF	20%	50V
C078	1-161-059-00	CERAMIC	0.047MF	10%	25V
C079	1-161-013-00	CERAMIC	0.01MF	10%	25V
C080	1-161-013-00	CERAMIC	0.01MF	10%	25V
C081	1-123-332-00	ELECT	47MF	20%	16V
C082	1-123-356-00	ELECT	10MF	20%	50V
C083	1-123-332-00	ELECT	47MF	20%	16V
C101	1-102-976-00	CERAMIC	180PF	5%	50V
C102	1-161-013-00	CERAMIC	0.01MF	10%	25V
C103	1-123-318-00	ELECT	33MF	20%	16V
C104	1-102-959-00	CERAMIC	22PF	5%	50V
C106	1-102-125-00	CERAMIC	0.0047MF	10%	50V
C107	1-161-013-00	CERAMIC	0.01MF	10%	25V
C108	1-161-013-00	CERAMIC	0.01MF	10%	25V
C109	1-102-959-00	CERAMIC	22PF	5%	50V
C113	1-102-959-00	CERAMIC	22PF	5%	50V
C115	1-161-013-00	CERAMIC	0.01MF	10%	25V
C116	1-123-380-00	ELECT	1MF	20%	50V
C117	1-123-333-00	ELECT	100MF	20%	16V
C118	1-161-059-00	CERAMIC	0.047MF	10%	25V
C150	1-101-880-00	CERAMIC	47PF	5%	50V
C201	1-102-123-00	CERAMIC	0.0033MF	10%	50V
C301	1-123-356-00	ELECT	10MF	20%	50V
C501	1-123-356-00	ELECT	10MF	20%	16V
C502	1-123-381-00	ELECT	2.2MF	20%	50V
C503	1-123-332-00	ELECT	47MF	20%	16V
C504	1-102-074-00	CERAMIC	0.001MF	10%	50V
C505	1-123-369-00	ELECT	4.7MF	20%	25V
C506	1-102-808-00	CERAMIC	6PF	1PF	50V
C508	1-102-816-00	CERAMIC	120PF	5%	50V
C511	1-123-369-00	ELECT	4.7MF	20%	25V
C512	1-123-332-00	ELECT	47MF	20%	16V
C513	1-161-013-00	CERAMIC	0.01MF	10%	25V
C601	1-101-004-00	CERAMIC	0.01MF		50V
C602	1-101-004-00	CERAMIC	0.01MF		50V
C603	1-123-356-00	ELECT	10MF	20%	16V
C604	1-123-382-00	ELECT	3.3MF	20%	50V
C605	1-101-001-00	CERAMIC	0.001MF		50V
C606	1-101-004-00	CERAMIC	0.01MF		50V
C608	1-123-380-00	ELECT	1MF	20%	50V

Ref.No	Part No.	Description			Remark
C701	1-123-330-00	ELECT	22MF	20%	16V
C702	1-123-330-00	ELECT	22MF	20%	16V
C703	1-102-121-00	CERAMIC	0.0022MF	10%	50V
C704	1-123-381-00	ELECT	2.2MF	20%	50V
C705	1-123-330-00	ELECT	22MF	20%	16V
C706	1-123-308-00	ELECT	220MF	20%	10V
C800	1-101-004-00	CERAMIC	0.01MF		50V
C801	1-130-483-00	MYLAR	0.01MF	5%	50V
C802	1-136-164-00	MYLAR	0.082MF	5%	50V
C803	1-101-004-00	CERAMIC	0.01MF		50V
C804	1-123-608-00	ELECT	0.22MF	20%	50V
C805	1-123-332-00	ELECT	47MF	20%	16V
C806	1-123-608-00	ELECT	0.22MF	20%	50V
C901	1-123-332-00	ELECT	47MF	20%	16V
C902	1-102-111-00	CERAMIC	270PF	10%	50V
C903	1-130-474-00	MYLAR	0.0018MF	5%	50V
C904	1-123-332-00	ELECT	47MF	20%	16V
C905	1-123-332-00	ELECT	47MF	20%	16V
C906	1-123-369-00	ELECT	4.7MF	20%	25V
C907	1-130-473-00	MYLAR	0.0015MF	5%	50V
C908	1-130-483-00	MYLAR	0.01MF	5%	50V
C909	1-123-381-00	ELECT	2.2MF	20%	50V
C910	1-123-332-00	ELECT	47MF	20%	16V
C911	1-102-978-00	CERAMIC	220PF	5%	50V
C912	1-123-332-00	ELECT	47MF	20%	16V
C913	1-123-356-00	ELECT	10MF	20%	16V
C914	1-123-330-00	ELECT	22MF	20%	16V
C915	1-123-379-00	ELECT	0.47MF	20%	50V
C916	1-123-332-00	ELECT	47MF	20%	16V
C917	1-130-481-00	MYLAR	0.0068MF	5%	50V
C918	1-123-356-00	ELECT	10MF	20%	16V
C919	1-130-477-00	MYLAR	0.0033MF	5%	50V
C920	1-130-479-00	MYLAR	0.0047MF	5%	50V
C921	1-123-332-00	ELECT	47MF	20%	16V
C922	1-136-215-00	FILM	0.0068MF	10%	400V
C923	1-107-080-00	MICA	62PF	5%	50V
C951	1-123-332-00	ELECT	47MF	20%	16V

DISCRIMINATOR

CD101	1-404-380-00	DISCRIMINATOR, CERAMIC 5.5MHZ

FILTER

CF003	1-527-822-00	OSCILLATOR, CERAMIC
CF101	1-527-263-00	CERAMIC FILTER (5.5MHZ)

CONNECTOR

CN001	*1-560-891-00	PIN, CONNECTOR 3P
CN002	*1-560-896-00	PIN, CONNECTOR 8P
CN003	*1-560-894-00	PIN, CONNECTOR 6P
CN004	*1-560-900-00	PIN, CONNECTOR 12P
CN501	*1-560-892-00	PIN, CONNECTOR 4P
CN502	*1-560-896-00	PIN, CONNECTOR 8P

When indicating parts by reference number, please include the board name.

TA-37

Ref.No	Part No.	Description	Remark
CN901	*1-564-030-00	PIN, CONNECTOR 5P	
CN902	*1-564-033-00	PIN, CONNECTOR 8P	
		TRIMMER	
CT001	1-404-134-00	TRAP, CERAMIC (5.5MHZ)	
CT101	1-409-333-00	TRAP, CERAMIC (6.0MHZ)	
		DIODE	
D003	8-719-911-19	DIODE 1SS119	
D005	8-719-812-33	DIODE TLG123A	
D006	8-719-812-31	DIODE TLR123	
D007	8-719-812-31	DIODE TLR123	
D008	8-719-000-12	DIODE MC931	
D009	8-719-812-32	DIODE TLY123	
D010	8-719-200-02	DIODE 10E-2	
D101	8-719-911-19	DIODE 1SS119	
D301	8-719-000-12	DIODE MC931	
D302	8-719-911-19	DIODE 1SS119	
D402	8-719-911-19	DIODE 1SS119	
D505	8-719-911-19	DIODE 1SS119	
D508	8-719-911-19	DIODE 1SS119	
D601	8-719-911-19	DIODE 1SS119	
D602	8-719-911-19	DIODE 1SS119	
D603	8-719-911-19	DIODE 1SS119	
D604	8-719-911-19	DIODE 1SS119	
D605	8-719-911-19	DIODE 1SS119	
D607	8-719-911-19	DIODE 1SS119	
D608	8-719-911-19	DIODE 1SS119	
D609	8-719-911-19	DIODE 1SS119	
D701	8-719-911-19	DIODE 1SS119	
D702	8-719-911-19	DIODE 1SS119	
D703	8-719-100-31	DIODE RD5.1EB3	
D704	8-719-911-19	DIODE 1SS119	
D705	8-719-911-19	DIODE 1SS119	
D706	8-719-911-19	DIODE 1SS119	
D707	8-719-911-19	DIODE 1SS119	
D800	8-719-911-19	DIODE 1SS119	
D801	8-719-911-19	DIODE 1SS119	
D901	8-719-000-06	DIODE MC921	
D902	8-719-911-19	DIODE 1SS119	
		IC	
IC001	8-759-276-07	IC TA7607AP	
IC005	8-759-602-16	IC M54572L	
IC006	8-759-157-40	IC UPC574J	
IC007	8-759-603-11	IC M50160-115SP	
IC008	8-759-600-66	IC M58653P	
IC009	8-759-105-50	IC UPD7507SC-068	
IC101	8-759-103-70	IC UPC1391HA	
IC601	8-759-205-76	IC TC504013BP	
IC901	8-759-101-73	IC UPC1513HA	
IC902	8-759-802-11	IC LA7091	

The components identified by shading and mark ⚠ are critical for safety. Replace only with part number specified.

When indicating parts by reference number, please include the board name.

Ref.No	Part No.	Description	Remark
		COIL	
L001	1-408-397-00	MICRO INDUCTOR 1UH	
L002	1-408-397-00	MICRO INDUCTOR 1UH	
L003	1-408-406-00	MICRO INDUCTOR 5.6UH	
L004	1-408-406-00	MICRO INDUCTOR 5.6UH	
L005	1-408-408-00	MICRO INDUCTOR 8.2UH	
L009	1-408-421-00	MICRO INDUCTOR 100UH	
L101	1-408-604-00	MICRO INDUCTOR 12UH	
L102	1-408-406-00	MICRO INDUCTOR 5.6UH	
L103	1-408-413-00	MICRO INDUCTOR 22UH	
L104	1-408-412-00	MICRO INDUCTOR 18UH	
L106	1-408-421-00	MICRO INDUCTOR 100UH	
L501	1-408-421-00	MICRO INDUCTOR 100UH	
L502	1-408-417-00	MICRO INDUCTOR 47UH	
L701	1-407-168-XX	MICRO INDUCTOR 82UH	
L901	1-407-508-00	MICRO INDUCTOR 22MMH	
L902	1-407-510-00	MICRO INDUCTOR 27MMH	
L903	1-410-120-11	MICRO INDUCTOR 1.2MMH	
		VARIABLE COIL	
LV901	1-408-713-00	VARIABLE INDUCTOR	
		TRANSISTOR	
Q001	8-729-203-28	TRANSISTOR 2SC2717	
Q005	⚠8-729-374-02	TRANSISTOR 2SB740	
Q006	8-729-900-89	TRANSISTOR DTC144ES	
Q007	8-729-245-83	TRANSISTOR 2SC2458	
Q008	8-729-245-83	TRANSISTOR 2SC2458	
Q009	8-729-245-83	TRANSISTOR 2SC2458	
Q011	8-729-204-83	TRANSISTOR 2SA1048	
Q012	8-729-204-83	TRANSISTOR 2SA1048	
Q013	8-729-900-89	TRANSISTOR DTC144ES	
Q015	8-729-900-89	TRANSISTOR DTC144ES	
Q101	8-729-245-83	TRANSISTOR 2SC2458	
Q106	8-729-900-74	TRANSISTOR DTC143TS	
Q201	8-729-204-83	TRANSISTOR 2SA1048	
Q202	8-729-245-83	TRANSISTOR 2SC2458	
Q301	8-729-900-65	TRANSISTOR DTA144ES	
Q501	8-729-245-83	TRANSISTOR 2SC2458	
Q502	8-729-204-83	TRANSISTOR 2SA1048	
Q503	8-729-117-54	TRANSISTOR 2SA1175	
Q504	8-729-245-83	TRANSISTOR 2SC2458	
Q505	8-729-245-83	TRANSISTOR 2SC2458	
Q506	8-729-245-83	TRANSISTOR 2SC2458	
Q507	8-729-245-83	TRANSISTOR 2SC2458	
Q508	8-729-900-80	TRANSISTOR DTC114ES	
Q509	8-729-204-83	TRANSISTOR 2SA1048	
Q601	8-729-900-89	TRANSISTOR DTC144ES	
Q602	8-729-245-83	TRANSISTOR 2SC2458	
Q603	8-729-245-83	TRANSISTOR 2SC2458	
Q605	8-729-900-89	TRANSISTOR DTC144ES	
Q606	8-729-245-83	TRANSISTOR 2SC2458	

TA-37

Ref.No	Part No.	Description	Remark
Q607	8-729-245-83	TRANSISTOR 2SC2458	
Q608	8-729-245-83	TRANSISTOR 2SC2458	
Q609	8-729-245-83	TRANSISTOR 2SC2458	
Q610	8-729-900-89	TRANSISTOR DTC144ES	
Q701	8-729-177-32	TRANSISTOR 2SD773	
Q702	8-729-245-83	TRANSISTOR 2SC2458	
Q703	8-729-900-80	TRANSISTOR DTC114ES	
Q704	8-729-204-83	TRANSISTOR 2SA1048	
Q800	8-729-900-89	TRANSISTOR DTC144ES	
Q802	8-729-900-89	TRANSISTOR DTC144ES	
Q901	8-729-900-89	TRANSISTOR DTC144ES	
Q904	8-729-245-83	TRANSISTOR 2SC2458	
Q906	8-729-177-43	TRANSISTOR 2SD774	
Q907	8-729-245-83	TRANSISTOR 2SC2458	

RESISTOR

Ref.No	Part No.	Description				Remark
R001	1-249-421-11	CARBON	2.2K	5%	1/6W	
R002	1-247-847-00	CARBON	4.7K	5%	1/6W	
R003	1-247-815-00	CARBON	220	5%	1/6W	
R004	1-247-819-00	CARBON	330	5%	1/6W	
R005	1-247-813-00	CARBON	180	5%	1/6W	
R006	1-247-837-00	CARBON	1.8K	5%	1/6W	
R007	1-249-419-11	CARBON	1.5K	5%	1/6W	
R008	1-247-867-00	CARBON	33K	5%	1/6W	
R009	1-247-879-00	CARBON	100K	5%	1/6W	
R010	1-247-879-00	CARBON	100K	5%	1/6W	
R011	1-247-901-00	CARBON	820K	5%	1/6W	
R012	1-247-831-00	CARBON	1K	5%	1/6W	
R013	1-247-815-00	CARBON	220	5%	1/6W	
R042	1-206-670-00	METAL OXIDE	1.8K	5%	2W	F
R043	1-247-847-00	CARBON	4.7K	5%	1/6W	
R044	1-247-831-00	CARBON	1K	5%	1/6W	
R045	1-247-833-00	CARBON	1.2K	5%	1/6W	
R046	1-249-421-11	CARBON	2.2K	5%	1/6W	
R047	1-249-421-11	CARBON	2.2K	5%	1/6W	
R048	1-247-891-00	CARBON	330K	5%	1/6W	
R049	1-247-863-00	CARBON	22K	5%	1/6W	
R050	1-247-863-00	CARBON	22K	5%	1/6W	
R051	1-247-863-00	CARBON	22K	5%	1/6W	
R052	1-247-863-00	CARBON	22K	5%	1/6W	
R053	1-247-863-00	CARBON	22K	5%	1/6W	
R054	1-247-877-00	CARBON	82K	5%	1/6W	
R055	1-247-851-00	CARBON	6.8K	5%	1/6W	
R056	1-247-843-00	CARBON	3.3K	5%	1/6W	
R058	1-247-867-00	CARBON	33K	5%	1/6W	
R059	1-247-863-00	CARBON	22K	5%	1/6W	
R060	1-247-847-00	CARBON	4.7K	5%	1/6W	
R061	1-247-863-00	CARBON	22K	5%	1/6W	
R062	1-247-867-00	CARBON	33K	5%	1/6W	
R063	1-249-429-11	CARBON	10K	5%	1/6W	
R064	1-249-429-11	CARBON	10K	5%	1/6W	
R065	1-249-429-11	CARBON	10K	5%	1/6W	
R066	1-249-429-11	CARBON	10K	5%	1/6W	
R067	1-247-903-00	CARBON	1M	5%	1/6W	
R068	1-247-831-00	CARBON	1K	5%	1/6W	
R070	1-247-853-00	CARBON	8.2K	5%	1/6W	
R071	1-249-437-11	CARBON	47K	5%	1/6W	
R072	1-249-437-11	CARBON	47K	5%	1/6W	
R073	1-249-437-11	CARBON	47K	5%	1/6W	
R074	1-247-833-00	CARBON	1.2K	5%	1/6W	
R076	1-249-419-11	CARBON	1.5K	5%	1/6W	
R077	1-247-847-00	CARBON	4.7K	5%	1/6W	
R101	1-247-807-00	CARBON	100	5%	1/6W	
R102	1-247-817-00	CARBON	270	5%	1/6W	
R103	1-247-815-00	CARBON	220	5%	1/6W	
R104	1-247-829-00	CARBON	820	5%	1/6W	
R105	1-247-819-00	CARBON	330	5%	1/6W	
R108	1-247-847-00	CARBON	4.7K	5%	1/6W	
R109	1-247-863-00	CARBON	22K	5%	1/6W	
R110	1-247-831-00	CARBON	1K	5%	1/6W	
R111	1-247-815-00	CARBON	220	5%	1/6W	
R113	1-247-831-00	CARBON	1K	5%	1/6W	
R115	1-249-437-11	CARBON	47K	5%	1/6W	
R116	1-247-891-00	CARBON	330K	5%	1/6W	
R201	1-247-819-00	CARBON	330	5%	1/6W	
R202	1-247-887-00	CARBON	220K	5%	1/6W	
R203	1-247-845-00	CARBON	3.9K	5%	1/6W	
R204	1-247-827-00	CARBON	680	5%	1/6W	
R205	1-249-414-11	CARBON	560	5%	1/6W	
R301	1-249-429-11	CARBON	10K	5%	1/6W	
R302	1-249-429-11	CARBON	10K	5%	1/6W	
R303	1-247-849-00	CARBON	5.6K	5%	1/6W	
R501	1-249-429-11	CARBON	10K	5%	1/6W	
R503	1-249-414-11	CARBON	560	5%	1/6W	
R504	1-249-429-11	CARBON	10K	5%	1/6W	
R505	1-247-847-00	CARBON	4.7K	5%	1/6W	
R507	1-247-833-00	CARBON	1.2K	5%	1/6W	
R508	1-247-831-00	CARBON	1K	5%	1/6W	
R509	1-247-849-00	CARBON	5.6K	5%	1/6W	
R510	1-247-847-00	CARBON	4.7K	5%	1/6W	
R511	1-249-429-11	CARBON	10K	5%	1/6W	
R512	1-247-857-00	CARBON	12K	5%	1/6W	
R513	1-247-831-00	CARBON	1K	5%	1/6W	
R514	1-247-807-00	CARBON	100	5%	1/6W	
R516	1-247-815-00	CARBON	220	5%	1/6W	
R517	1-249-414-11	CARBON	560	5%	1/6W	
R519	1-247-815-00	CARBON	220	5%	1/6W	
R523	1-247-847-00	CARBON	4.7K	5%	1/6W	
R524	1-247-807-00	CARBON	100	5%	1/6W	
R525	1-247-831-00	CARBON	1K	5%	1/6W	
R526	1-247-837-00	CARBON	1.8K	5%	1/6W	
R527	1-247-807-00	CARBON	100	5%	1/6W	
R550	1-247-799-00	CARBON	47	5%	1/6W	
R601	1-249-429-11	CARBON	10K	5%	1/6W	
R602	1-249-429-11	CARBON	10K	5%	1/6W	
R603	1-249-429-11	CARBON	10K	5%	1/6W	

When indicating parts by reference number, please include the board name.

TA-37

Ref.No	Part No.	Description				Remark
R604	1-249-429-11	CARBON	10K	5%	1/6W	
R605	1-249-429-11	CARBON	10K	5%	1/6W	
R606	1-249-429-11	CARBON	10K	5%	1/6W	
R607	1-249-429-11	CARBON	10K	5%	1/6W	
R608	1-249-434-11	CARBON	27K	5%	1/6W	
R609	1-247-849-00	CARBON	5.6K	5%	1/6W	
R610	1-247-867-00	CARBON	33K	5%	1/6W	
R611	1-247-867-00	CARBON	33K	5%	1/6W	
R612	1-247-843-00	CARBON	3.3K	5%	1/6W	
R613	1-249-429-11	CARBON	10K	5%	1/6W	
R614	1-247-861-00	CARBON	18K	5%	1/6W	
R615	1-247-869-00	CARBON	39K	5%	1/6W	
R616	1-249-421-11	CARBON	2.2K	5%	1/6W	
R617	1-249-437-11	CARBON	47K	5%	1/6W	
R618	1-249-429-11	CARBON	10K	5%	1/6W	
R619	1-247-847-00	CARBON	4.7K	5%	1/6W	
R620	1-249-429-11	CARBON	10K	5%	1/6W	
R622	1-249-429-11	CARBON	10K	5%	1/6W	
R701	1-247-791-00	CARBON	22	5%	1/6W	
R702	1-247-811-00	CARBON	150	5%	1/6W	
R703	1-247-831-00	CARBON	1K	5%	1/6W	
R704	1-247-831-00	CARBON	1K	5%	1/6W	
R705	1-247-819-00	CARBON	330	5%	1/6W	
R706	1-249-429-11	CARBON	10K	5%	1/6W	
R707	1-249-429-11	CARBON	10K	5%	1/6W	
R800	1-247-847-00	CARBON	4.7K	5%	1/6W	
R801	1-247-847-00	CARBON	4.7K	5%	1/6W	
R802	⚠1-212-853-00	FUSIBLE	6.8	5%	1/4W	F
R805	1-249-429-11	CARBON	10K	5%	1/6W	
R806	1-247-843-00	CARBON	3.3K	5%	1/6W	
R807	1-249-437-11	CARBON	47K	5%	1/6W	
R820	1-247-869-00	CARBON	39K	5%	1/6W	
R821	1-247-861-00	CARBON	18K	5%	1/6W	
R901	1-249-429-11	CARBON	10K	5%	1/6W	
R902	1-247-783-00	CARBON	10	5%	1/6W	
R903	1-247-859-00	CARBON	15K	5%	1/6W	
R904	1-247-831-00	CARBON	1K	5%	1/6W	
R905	1-247-821-00	CARBON	390	5%	1/6W	
R906	1-247-861-00	CARBON	18K	5%	1/6W	
R907	1-247-885-00	CARBON	180K	5%	1/6W	
R908	1-249-429-11	CARBON	10K	5%	1/6W	
R909	1-247-867-00	CARBON	33K	5%	1/6W	
R912	1-247-899-00	CARBON	680K	5%	1/6W	
R913	1-247-867-00	CARBON	33K	5%	1/6W	
R914	1-247-829-00	CARBON	820	5%	1/6W	
R915	1-249-429-11	CARBON	10K	5%	1/6W	
R916	1-247-831-00	CARBON	1K	5%	1/6W	
R917	1-247-807-00	CARBON	100	5%	1/6W	
R919	⚠1-212-853-00	FUSIBLE	6.8	5%	1/4W	F
R921	1-247-831-00	CARBON	1K	5%	1/6W	
R922	1-247-859-00	CARBON	15K	5%	1/6W	
R923	1-247-077-00	CARBON	3.3	5%	1/4W	
R925	1-249-437-11	CARBON	47K	5%	1/6W	

Ref.No	Part No.	Description				Remark
R926	1-247-853-00	CARBON	8.2K	5%	1/6W	
R950	1-247-857-00	CARBON	12K	5%	1/6W	
R951	1-247-867-00	CARBON	33K	5%	1/6W	
		VARIABLE RESISTOR				
RV001	1-228-993-00	RES, ADJ, CARBON 4.7K				
RV901	1-228-994-00	RES, ADJ, CARBON 10K				
RV902	1-228-998-00	RES, ADJ, METAL GLAZE 220K				
		RELAY				
RY901	1-515-418-00	RELAY				
		SWITCH				
S001	1-553-997-00	SWITCH, KEY BOARD				
S002	1-553-997-00	SWITCH, KEY BOARD				
S003	1-553-997-00	SWITCH, KEY BOARD				
S004	1-553-997-00	SWITCH, KEY BOARD				
S005	1-553-997-00	SWITCH, KEY BOARD				
S006	1-553-997-00	SWITCH, KEY BOARD				
S007	1-553-997-00	SWITCH, KEY BOARD				
		SAWF				
SAWF1011	-404-563-11	SAWF				
		TRANSFORMER				
T001	1-404-068-00	COIL, VIF				
T002	1-404-068-00	COIL, VIF				
T003	1-404-427-00	VIFT				
T004	1-404-427-00	VIFT				
T101	1-404-428-00	VIFT				
T701	1-446-571-00	TRANSFORMER, CONVERTOR				
T901	1-433-275-00	TRANSFORMER, BIAS OSCILLATOR				
		TUNER				
TU001	⚠1-463-584-21	TUNER, ET (BT-881AD)				

****

The components identified by shading and mark ⚠ are critical for safety. Replace only with part number specified.

When indicating parts by reference number, please include the board name.

LM-17 PW-15 US-1 LS-11 FL-8 FL-9

Ref.No	Part No.	Description			Remark
	*1-616-601-11	LM-17 BOARD			
		**********			
		CAPACITOR			
C101	1-161-057-00	CERAMIC	0.033MF	20% 25V	
C102	1-161-057-00	CERAMIC	0.033MF	20% 25V	
		COIL			
L101	1-408-120-00	MICRO INDUCTOR 18UH			
L102	1-408-120-00	MICRO INDUCTOR 18UH			
**********					
	*1-617-041-11	PW-15 BOARD			
		**********			
	*3-697-646-01	HOLDER (PW), LED			
		DIODE			
D101	8-719-812-33	DIODE TLG123A			
		RESISTOR			
R101	1-247-708-11	CARBON	470	5% 1/4W	
		VARIABLE RESISTOR			
RV101	1-230-856-11	RES, VAR, CARBON 50K/50K			
		SWITCH			
SW101	1-554-174-00	SWITCH, KEY BOARD			
**********					
	*1-616-598-11	US-1 BOARD			
		**********			
**********					
	*1-616-600-11	LS-11 BOARD			
		**********			
		CAPACITOR			
C001	1-161-057-00	CERAMIC	0.033MF	20% 25V	
C002	1-161-057-00	CERAMIC	0.033MF	20% 25V	
		COIL			
L001	1-408-120-00	MICRO INDUCTOR 18UH			
L002	1-408-120-00	MICRO INDUCTOR 18UH			
**********					
	*A-6724-466-A	FL-8 BOARD, COMPLETE			
		**********			
	*3-697-606-01	HOLDER, LED, B-HIFI			
	*3-697-607-01	HOLDER (SU), LED			

Ref.No	Part No.	Description			Remark
	*3-697-648-01	HOLDER, INDICATION TUBE			
		CAPACITOR			
C001	1-123-356-00	ELECT	10MF	20% 16V	
		CONNECTOR			
CN001	*1-564-016-00	PIN, CONNECTOR 6P			
CN002	*1-564-001-11	PIN, CONNECTOR 2P			
		TRIMMER			
CV101	1-141-022-11	CAP, TRIMMER, CERAMIC			
		DIODE			
D001	8-719-906-49	DIODE LT-9230N			
D002	8-719-812-33	DIODE TLG123A			
		INDICATOR TUBE			
FL001	1-519-366-11	INDICATOR TUBE, FLUORESCENT			
		IC			
IC001	8-741-131-70	IC BX-1317			
		RESISTOR			
R001	1-249-437-11	CARBON	47K	5% 1/6W	
R003	1-247-801-00	CARBON	56	5% 1/6W	
R004	1-247-813-00	CARBON	180	5% 1/6W	
R005	1-247-813-00	CARBON	180	5% 1/6W	
R006	1-249-421-11	CARBON	2.2K	5% 1/6W	
R007	1-249-421-11	CARBON	2.2K	5% 1/6W	
		VARIABLE RESISTOR			
RV001	1-230-986-11	RES, VAR, SLIDE 20K/20K			
RV002	1-228-994-00	RES, ADJ, CARBON 10K			
RV003	1-228-994-00	RES, ADJ, CARBON 10K			
		SWITCH			
S001	1-554-174-00	SWITCH, KEY BOARD			
S002	1-554-174-00	SWITCH, KEY BOARD			
S003	1-554-174-00	SWITCH, KEY BOARD			
S004	1-554-174-00	SWITCH, KEY BOARD			
S005	1-554-174-00	SWITCH, KEY BOARD			
S006	1-554-174-00	SWITCH, KEY BOARD			
**********					
	*A-6724-467-A	FL-9 BOARD, COMPLETE			
		**********			
		CAPACITOR			
C102	1-123-617-00	ELECT	10MF	20% 16V	
C103	1-123-617-00	ELECT	10MF	20% 16V	

When indicating parts by reference number, please include the board name.

FL-9 FR-20

Ref.No	Part No.	Description			Remark
C104	1-102-508-00	CERAMIC	10PF	0.5PF	50V
C105	1-161-025-00	CERAMIC	0.1MF	10%	25V
C106	1-123-611-00	ELECT	1MF	20%	50V
		CONNECTOR			
CN101	*1-564-003-00	PIN, CONNECTOR 4P			
CN102	*1-564-011-11	PIN, CONNECTOR 12P			
		COMPOSITION CIRCUIT BLOCK			
CP101	1-232-967-11	COMPOSITION CIRCUIT BLOCK			
		DIODE			
D102	8-719-100-54	DIODE RD9.1E-B2			
		IC			
IC101	8-752-800-26	IC CXP5016-104S			
IC102	8-759-913-41	IC S-8054ALB			
		TRANSISTOR			
Q102	8-729-900-80	TRANSISTOR DTC114ES			
Q103	8-729-900-80	TRANSISTOR DTC114ES			
		RESISTOR			
R104	1-249-429-11	CARBON	10K	5%	1/6W
R107	1-247-843-00	CARBON	3.3K	5%	1/6W
R109	1-247-879-00	CARBON	100K	5%	1/6W
		CRYSTAL			
X101	1-567-519-11	VIBRATOR, CRYSTAL			
**********					
	*A-6725-469-A	FR-20 BOARD, COMPLETE			
		**********			
	*3-684-005-01	HOLDER (S), LED			
	*3-697-663-01	HOLDER (FR), LED			
		CAPACITOR			
C001	1-161-025-00	CERAMIC	0.1MF	10%	25V
C002	1-161-025-00	CERAMIC	0.1MF	10%	25V
C003	1-102-518-00	CERAMIC	33PF	5%	50V
C004	1-102-518-00	CERAMIC	33PF	5%	50V
		CONNECTOR			
CN004	*1-564-016-00	PIN, CONNECTOR 6P			
CN005	*1-564-013-00	PIN, CONNECTOR 3P			
CN006	*1-564-013-00	PIN, CONNECTOR 3P			
		DIODE			
D001	8-719-911-19	DIODE 1SS119			
D002	8-719-911-19	DIODE 1SS119			
D003	8-719-911-19	DIODE 1SS119			

Ref.No	Part No.	Description	Remark
D004	8-719-911-19	DIODE 1SS119	
D005	8-719-911-19	DIODE 1SS119	
D006	8-719-911-19	DIODE 1SS119	
D007	8-719-911-19	DIODE 1SS119	
D008	8-719-812-33	DIODE TLG123A	
D009	8-719-812-31	DIODE TLR123	
D010	8-719-812-31	DIODE TLR123	
D011	8-719-812-31	DIODE TLR123	
D012	8-719-812-30	DIODE TLO123	
D013	8-719-812-32	DIODE TLY123	
D014	8-719-812-32	DIODE TLY123	
D015	8-719-812-33	DIODE TLG123A	
D016	8-719-812-33	DIODE TLG123A	
D017	8-719-812-33	DIODE TLG123A	
D018	8-719-812-33	DIODE TLG123A	
D019	8-719-812-33	DIODE TLG123A	
D020	8-719-812-33	DIODE TLG123A	
D021	8-719-812-33	DIODE TLG123A	
D022	8-719-812-33	DIODE TLG123A	
D023	8-719-812-33	DIODE TLG123A	
D024	8-719-812-33	DIODE TLG123A	
D025	8-719-911-19	DIODE 1SS119	
D026	8-719-911-19	DIODE 1SS119	
D027	8-719-911-19	DIODE 1SS119	
D028	8-719-911-19	DIODE 1SS119	
D029	8-719-911-19	DIODE 1SS119	
D030	8-719-911-19	DIODE 1SS119	
D031	8-719-911-19	DIODE 1SS119	
D032	8-719-911-19	DIODE 1SS119	
D033	8-719-911-19	DIODE 1SS119	
D034	8-719-911-19	DIODE 1SS119	
D035	8-719-911-19	DIODE 1SS119	
D036	8-719-911-19	DIODE 1SS119	
		IC	
IC001	8-759-105-54	IC UPD7508HG-536-22	
IC002	8-759-901-38	IC SN74LS138N	
		TRANSISTOR	
Q001	8-729-245-83	TRANSISTOR 2SC2458	
Q002	8-729-245-83	TRANSISTOR 2SC2458	
Q003	8-729-902-11	TRANSISTOR 2SC2021	
Q004	8-729-902-11	TRANSISTOR 2SC2021	
Q005	8-729-245-83	TRANSISTOR 2SC2458	
Q006	8-729-245-83	TRANSISTOR 2SC2458	
Q007	8-729-245-83	TRANSISTOR 2SC2458	
Q008	8-729-245-83	TRANSISTOR 2SC2458	
Q009	8-729-117-54	TRANSISTOR 2SA1175	
Q020	8-729-117-54	TRANSISTOR 2SA1175	
		RESISTOR	
R004	1-249-437-11	CARBON 47K 5%	1/6W
R005	1-247-873-00	CARBON 56K 5%	1/6W

When indicating parts by reference number, please include the board name.

Ref.No	Part No.	Description				Remark
R006	1-249-437-11	CARBON	47K	5%	1/6W	
R007	1-247-873-00	CARBON	56K	5%	1/6W	
R008	1-247-843-00	CARBON	3.3K	5%	1/6W	
R009	1-247-879-00	CARBON	100K	5%	1/6W	
R018	1-247-879-00	CARBON	100K	5%	1/6W	
R019	1-247-879-00	CARBON	100K	5%	1/6W	
R020	1-247-879-00	CARBON	100K	5%	1/6W	
R021	1-247-879-00	CARBON	100K	5%	1/6W	
R022	1-247-879-00	CARBON	100K	5%	1/6W	
R023	1-247-879-00	CARBON	100K	5%	1/6W	
R024	1-247-879-00	CARBON	100K	5%	1/6W	
R025	1-247-805-00	CARBON	82	5%	1/6W	
R026	1-247-805-00	CARBON	82	5%	1/6W	
R027	1-247-805-00	CARBON	82	5%	1/6W	
R028	1-247-805-00	CARBON	82	5%	1/6W	
R029	1-247-805-00	CARBON	82	5%	1/6W	
R030	1-247-805-00	CARBON	82	5%	1/6W	
R031	1-247-805-00	CARBON	82	5%	1/6W	
R032	1-247-809-00	CARBON	120	5%	1/6W	
R033	1-249-414-11	CARBON	560	5%	1/6W	
R034	1-249-414-11	CARBON	560	5%	1/6W	
R035	1-249-421-11	CARBON	2.2K	5%	1/6W	
R036	1-247-859-00	CARBON	15K	5%	1/6W	
R037	1-247-843-00	CARBON	3.3K	5%	1/6W	
R040	1-247-895-11	CARBON	470K	5%	1/6W	
		VARIABLE RESISTOR				
RV001	1-230-431-11	RES, VAR, CARBON 100K				
RV002	1-230-430-11	RES, VAR, CARBON 10K				
RV003	1-230-430-11	RES, VAR, CARBON 10K				
		SWITCH				
S001	1-553-716-00	SWITCH, SLIDE				
S002	1-553-754-00	SWITCH, SLIDE				
S003	1-553-716-00	SWITCH, SLIDE				
S004	1-553-754-00	SWITCH, SLIDE				
S005	1-553-716-00	SWITCH, SLIDE				
S006	1-553-754-00	SWITCH, SLIDE				
S007	1-553-716-00	SWITCH, SLIDE				
S008	1-553-716-00	SWITCH, SLIDE				
S009	1-553-716-00	SWITCH, SLIDE				
S010	1-553-754-00	SWITCH, SLIDE				
S011	1-554-174-00	SWITCH, KEY BOARD				
S012	1-554-174-00	SWITCH, KEY BOARD				
S013	1-554-174-00	SWITCH, KEY BOARD				
S014	1-554-174-00	SWITCH, KEY BOARD				
S015	1-554-174-00	SWITCH, KEY BOARD				
S016	1-554-174-00	SWITCH, KEY BOARD				
S017	1-554-174-00	SWITCH, KEY BOARD				
S018	1-554-174-00	SWITCH, KEY BOARD				
S019	1-554-174-00	SWITCH, KEY BOARD				
S020	1-554-174-00	SWITCH, KEY BOARD				
S021	1-554-174-00	SWITCH, KEY BOARD				
S022	1-554-174-00	SWITCH, KEY BOARD				
S023	1-554-174-00	SWITCH, KEY BOARD				
S024	1-554-174-00	SWITCH, KEY BOARD				
S025	1-554-174-00	SWITCH, KEY BOARD				
S026	1-554-174-00	SWITCH, KEY BOARD				
S027	1-554-174-00	SWITCH, KEY BOARD				
S028	1-554-174-00	SWITCH, KEY BOARD				
S029	1-554-174-00	SWITCH, KEY BOARD				
S030	1-554-174-00	SWITCH, KEY BOARD				
S031	1-554-174-00	SWITCH, KEY BOARD				
S032	1-554-174-00	SWITCH, KEY BOARD				
S033	1-554-174-00	SWITCH, KEY BOARD				
S034	1-554-174-00	SWITCH, KEY BOARD				
S035	1-554-174-00	SWITCH, KEY BOARD				
S037	1-554-174-00	SWITCH, KEY BOARD				
S038	1-554-174-00	SWITCH, KEY BOARD				
		CRYSTAL				
X001	1-527-822-00	OSCILLATOR, CERAMIC				
**********						
	*1-616-599-11	RD-17 BOARD **********				
	*3-696-392-01	HOLDER, PI				
		DIODE				
PC001	8-719-751-42	DIODE NJL5141E-AC				
PC002	8-719-751-42	DIODE NJL5141E-AC				
**********						
	*1-617-042-11	HP-18 BOARD **********				
		JACK				
J001	1-507-796-21	JACK				
**********						
	*1-617-043-11	MC-10 BOARD **********				
		JACK				
J901	1-507-678-00	JACK				
		RESISTOR				
R102	1-247-831-00	CARBON	1K	5%	1/6W	
R103	1-247-879-00	CARBON	100K	5%	1/6W	
**********						
	*1-616-602-11	OC-1 BOARD **********				
		SWITCH				
MS-1	1-570-424-11	SWITCH, MICRO				
MS-2	1-570-424-11	SWITCH, MICRO				
**********						

When indicating parts by reference number, please include the board name.

POWER BLOCK

Ref.No.	Part No.	Description	Remark
	⚠•1-413-229-11	REGULATOR, SWITCHING (SR-21E)	
		**********	
		M BOARD, COMPLETE	
		**********	
	⚠•2-431-533-01	COVER, CAPACITOR	
	⚠*•2-431-517-01	PLATE, HOLDER, TRANSISTOR	
	⚠•2-431-531-01	RUBBER, STB-SR21	

CAPACITOR

C602	⚠•1-161-742-12	CERAMIC	0.0022MF	400V
C603	⚠•1-161-742-12	CERAMIC	0.0022MF	400V
C604	⚠•1-161-742-12	CERAMIC	0.0022MF	400V
C605	⚠•1-161-742-12	CERAMIC	0.0022MF	400V
C606	⚠•1-136-416-11	FILM	0.22MF	250V
C607	⚠1-161-743-12	CERAMIC	0.0047MF	400V
C608	⚠1-161-743-12	CERAMIC	0.0047MF	400V
C609	1-125-352-00	ELECT	180MF	400V
C611	1-124-023-00	ELECT	4.7MF	350V
C612	1-124-162-00	ELECT	47MF	10V
C613	1-124-162-00	ELECT	47MF	10V
C621	1-106-347-00	FILM	0.0015MF	200V
C622	1-106-347-00	FILM	0.0015MF	200V
C623	1-161-910-00	CERAMIC	390PF	500V
C624	1-161-910-00	CERAMIC	390PF	500V
C625	1-161-915-00	CERAMIC	0.001MF	500V
C626	1-136-153-00	FILM	0.01MF	50V
C627	1-136-157-00	FILM	0.022MF	50V
C628	1-123-385-00	ELECT	22MF	100V
C630	1-124-597-11	ELECT	2200MF	16V
C631	1-136-157-00	FILM	0.022MF	50V

CONNECTOR

CN620	1-508-847-00	PIN, CONNECTOR 4P

DIODE

D601	8-719-300-63	DIODE LB156
D621	8-719-908-00	DIODE ESAC33-02C5
D622	8-719-900-93	DIODE V09C
D623	8-719-815-85	DIODE 1S1585
D624	8-719-100-61	DIODE RD11EB2
D625	8-719-100-44	DIODE RD7.5EB2
D626	8-719-100-50	DIODE RD9.1EB1
D641	8-719-900-93	DIODE V09C

FERRITE BEAD

FB621	1-543-060-00	BEAD, FERRITE
FB622	1-543-060-00	BEAD, FERRITE
FB623	1-543-060-00	BEAD, FERRITE
FB624	1-543-060-00	BEAD, FERRITE

The components identified by shading and mark ⚠ are critical for safety. Replace only with part number specified.

When indicating parts by reference number, please include the board name.

Ref.No.	Part No.	Description	Remark

COIL

L601	⚠•1-421-824-11	TRANSFORMER, LINE FILTER 20MH
L621	1-421-791-11	COIL, CHOKE 2MH

TRANSISTOR

Q601	8-729-104-66	TRANSISTOR 2SC3158
Q602	8-729-104-66	TRANSISTOR 2SC3158
Q603	8-729-100-13	TRANSISTOR 2SC2001
Q604	8-729-100-13	TRANSISTOR 2SC2001
Q621	8-729-306-72	TRANSISTOR 2SD667A
Q622	8-729-245-83	TRANSISTOR 2SC2458

RESISTOR

R602	1-205-783-11	WIRE WOUND	2.2	5W	F
R603	1-246-528-00	CARBON	200K	1/4W	
R604	1-246-528-00	CARBON	200K	1/4W	
R605	1-246-528-00	CARBON	200K	1/4W	
R606	1-246-528-00	CARBON	200K	1/4W	
R607	⚠1-212-946-11	FUSIBLE	3.3	1/2W	F
R608	⚠1-212-946-11	FUSIBLE	3.3	1/2W	F
R609	1-247-700-11	CARBON	100	1/4W	
R610	1-247-700-11	CARBON	100	1/4W	
R611	⚠1-217-418-21	FUSIBLE	0.47	1/2W	F
R621	1-206-475-11	METAL OXIDE	33	2W	F
R622	1-535-363-00	SHUNT	0.02	2W	
R623	1-247-143-00	CARBON	3.3K	1/4W	
R624	1-247-713-11	CARBON	1K	1/4W	
R625	1-247-700-11	CARBON	100	1/4W	
R626	1-213-157-11	METAL OXIDE	15K	1W	F
R627	1-247-713-11	CARBON	1K	1/4W	
R628	1-247-717-11	CARBON	2.2K	1/4W	
R629	1-249-455-11	CARBON	4.7	1/4W	
R630	1-247-702-11	CARBON	150	1/4W	

TRANSFORMER

T601	⚠•1-447-677-41	TRANSFORMER, CONVERTER
T602	⚠•1-437-120-11	TRANSFORMER, DRIVE

****

CN BOARD, COMPLETE

****

CAPACITOR

C636	1-123-330-00	ELECT	22MF	25V
C637	1-123-323-00	ELECT	470MF	16V
C638	1-124-555-00	ELECT	1000MF	16V
C639	1-123-323-00	ELECT	470MF	16V
C641	1-123-333-00	ELECT	100MF	25V
C642	1-123-333-00	ELECT	100MF	25V
C643	1-123-357-00	ELECT	22MF	50V
C644	1-123-357-00	ELECT	22MF	50V
C645	1-123-356-00	ELECT	10MF	50V
C646	1-123-357-00	ELECT	22MF	50V

POWER BLOCK

Ref.No.	Part No.	Description			Remark
		CONNECTOR			
CN1	*1-564-163-00	PIN, CONNECTOR 6P			
CN001	*1-560-894-00	PIN, CONNECTOR 6P			
CN002	*1-560-893-00	PIN, CONNECTOR 5P			
CN003	*1-560-891-00	PIN, CONNECTOR 3P			
CN004	*1-560-892-00	PIN, CONNECTOR 4P			
CN005	*1-560-896-00	PIN, CONNECTOR 8P			
		DIODE			
D630	8-719-101-04	DIODE RD33EB2			
D631	8-719-911-19	DIODE 1SS119			
D636	8-719-911-19	DIODE 1SS119			
D637	8-719-911-19	DIODE 1SS119			
D638	8-719-100-40	DIODE RD6.8EB1			
D639	8-719-911-19	DIODE 1SS119			
D640	8-719-100-38	DIODE RD6.2EB2			
		COIL			
L622	1-421-421-00	COIL, CHOKE 100μH			
L623	1-421-421-00	COIL, CHOKE 100μH			
L624	1-408-933-00	COIL, CHOKE 10μH			
		TRANSISTOR			
Q623	8-729-245-83	TRANSISTOR 2SC2458-GR			
Q624	8-729-204-83	TRANSISTOR 2SA1048-GR			
Q626	8-729-188-23	TRANSISTOR 2SD882			
Q627	8-729-188-23	TRANSISTOR 2SD882			
Q628	8-729-245-83	TRANSISTOR 2SC2458-GR			
		RESISTOR			
R640	1-247-159-00	CARBON	15K	1/4W	
R641	1-247-147-00	CARBON	4.7K	1/4W	
R642	1-247-147-00	CARBON	4.7K	1/4W	
R643	1-247-141-00	CARBON	2.7K	1/4W	
R644	1-247-143-00	CARBON	3.3K	1/4W	
R645	1-247-134-00	CARBON	1.3K	1/4W	
R646	1-247-155-00	CARBON	10K	1/4W	
R647	1-247-147-00	CARBON	4.7K	1/4W	
R650	1-205-724-11	CEMENT-COATED	22	5W	F
R651	1-247-129-00	CARBON	820	1/4W	
R652	1-205-789-11	CEMENT-COATED	1.8	5W	F
R653 ⚠	1-247-920-61	CARBON	150	1/2W	F
R654	1-247-133-00	CARBON	1.2K	1/4W	
R655	1-247-141-00	CARBON	2.7K	1/4W	
R6					
		VARIABLE RESISTOR			
RV621	1-228-991-00	RES, ADJ, METAL GLAZE 2.2K			
		RELAY			
RY621	1-515-462-00	RELAY			

****

Ref.No	Part No.	Description			Remark
	*1-616-113-11	C BOARD *******			
		CAPACITOR			
C1	1-123-333-00	ELECT	100MF	25V	
C2	1-130-150-00	FILM	0.0056MF	50V	
C3	1-136-159-00	FILM	0.033MF	50V	
C4	1-136-145-00	FILM	0.0022MF	50V	
C5	1-123-318-00	ELECT	33MF	16V	
		DIODE			
D1	8-719-200-02	DIODE 10E-2			
D2	8-719-100-67	DIODE RD13EB1			
		IC			
IC1	8-759-937-59	IC MB-3759			
		RESISTOR			
R1	1-247-825-00	CARBON	560	1/6W	
R2	1-247-867-00	CARBON	33K	1/6W	
R3	1-247-843-00	CARBON	3.3K	1/6W	
R4	1-247-831-00	CARBON	1K	1/6W	
R5	1-247-849-00	CARBON	5.6K	1/6W	
R6	1-249-421-11	CARBON	2.2K	1/6W	
R7	1-247-841-00	CARBON	2.7K	1/6W	
R8	1-247-836-00	CARBON	1.6K	1/6W (STANDARD)	
	1-249-419-11	CARBON	1.5K	1/6W (ADJUST)	
	1-247-837-00	CARBON	1.8K	1/6W (ADJUST)	
R9	1-247-861-00	CARBON	18K	1/6W	
R10	1-247-700-11	CARBON	100	1/4W	
		VARIABLE RESISTOR			
RV1	1-228-141-00	RES, ADJ, METAL GLAZE 500			
	*1-616-114-11	D BOARD *******			
		CAPACITOR			
C21	1-136-150-00	FILM	0.0056MF	50V	
C22	1-123-356-00	ELECT	10MF	50V	
C23	1-161-915-00	CERAMIC	0.001MF	500V	
C24	1-123-333-00	ELECT	100MF	25V	
C25	1-136-165-00	FILM	0.1MF	50V	
C26	1-136-165-00	FILM	0.1MF	50V	
C27	1-123-357-00	ELECT	22MF	50V	
C28	1-123-357-00	ELECT	22MF	50V	
		CONNECTOR			
CN21	1-564-163-00	PIN, CONNECTOR 6P			
		DIODE			
D21	8-719-815-85	DIODE 1S1585			
D22	8-719-815-85	DIODE 1S1585			
D23	8-719-815-85	DIODE 1S1585			

The components identified by shading and mark ⚠ are critical for safety. Replace only with part number specified.

When indicating parts by reference number, please include the board name.

POWER BLOCK

Ref.No.	Part No.	Description			Remark
		IC			
IC21	8-759-937-59	IC MB3759			
		COIL			
L21	1-421-550-00	COIL, CHOKE 66μH			
L22	1-421-421-00	COIL, CHOKE 100μH			
L23	1-408-421-00	MICRO INDUCTOR 100μH			
L24	1-408-421-00	MICRO INDUCTOR 100μH			
L25	1-408-427-00	MICRO INDUCTOR 330μH			
L26	1-408-427-00	MICRO INDUCTOR 330μH			
		IC LINK			
PS21	⚠1-532-679-11	LINK, IC			
		TRANSISTOR			
Q21	8-729-177-43	TRANSISTOR 2SD774			
Q22	8-729-177-43	TRANSISTOR 2SD774			
		RESISTOR			
R21	⚠1-247-913-61	CARBON	1K	1/4W	F
R22	1-247-807-00	CARBON	100	1/6W	
R23	1-247-807-00	CARBON	100	1/6W	
R24	1-247-837-00	CARBON	1.8K	1/6W	(STANDARD)
	1-249-419-11	CARBON	1.5K	1/6W	(ADJUST)
	1-249-421-11	CARBON	2.2K	1/6W	(ADJUST)
R25	1-247-859-00	CARBON	15K	1/6W	
R26	1-247-869-00	CARBON	39K	1/6W	
R27	1-247-811-00	CARBON	150	1/6W	
R28	1-247-887-00	CARBON	220K	1/6W	
R29	1-247-831-00	CARBON	1K	1/6W	
		VARIABLE RESISTOR			
RV21	1-228-644-00	RES, ADJ, METAL GLAZE 1K			
		TRANSFORMER			
T21	1-448-269-11	TRANSFORMER, DC-DC CONVERTER			

****

⚠*1-616-498-11	F BOARD	
	*******	
⚠1-533-170-11	HOLDER, FUSE	
⚠*1-535-443-11	TERMINAL, PIN, AC CORD	
	CAPACITOR	
C601	⚠1-136-416-11	FILM 0.22MF 250V
	FUSE	
F601	⚠1-532-237-11	FUSE, TIME LAG, T3.15A 250V
	RESISTOR	
R601	⚠1-214-947-21	METAL 2.7M 1/2W

****

Ref.No	Part No.	Description	Remark
		MISCELLANEOUS	
		**********	
⚠1-413-229-11		REGULATOR, SWITCHING (SR-21E)	
⚠1-464-479-11		BOOSTER MIXER, RF MODULATOR (ES MODEL)	
⚠1-464-481-11		BOOSTER MIXER, RF MODULATOR (E MODEL)	
1-464-526-11		T COIL SENSOR	
1-464-527-11		S COIL SENSOR	
1-520-485-11		METER UNIT, LEVEL	
⚠1-534-817-31		CORD, POWER	
8-825-508-10		HEAD, FE	
M902	8-838-096-01	MOTOR, DC (BHF-1914A) (CAPSTAN MOTOR)	
M904	X-3696-314-1	MOTOR ASSY, L (LOADING MOTOR)	
M905	X-3696-306-1	MOTOR ASSY, DC (SKATE MOTOR)	
S901	1-554-839-11	SWITCH, LEAF (2 GANG)	
S902	1-570-394-21	SWITCH, ROTARY (ROTARY ENCODER)	

ACCESSORIES AND PACKING MATERIALS

****

Part No.	Description	Remark
A-6765-943-A	COMMANDER ASSY (RMT-223)	
1-551-513-00	CORD ASSY, COAXIAL	
*3-681-287-01	LID, ACCESSORY CASE	
3-694-484-01	DRIVER, VOLUME	
*3-697-649-01	CASE, ACCESSORY	
*3-697-650-01	CUSHION (UPPER)	
*3-697-651-02	CUSHION (LOWER)	
*3-697-684-01	INDIVIDUAL CARTON (ES MODEL)	
*3-697-711-01	INDIVIDUAL CARTON (E MODEL)	
*3-697-712-01	SHEET, PROTECTION	
3-760-837-11	MANUAL, INSTRUCTION	
3-760-837-41	MANUAL, INSTRUCTION (ES MODEL)	
3-760-837-52	MANUAL, INSTRUCTION	

****

The components identified by shading and mark ⚠ are critical for safety. Replace only with part number specified.

When indicating parts by reference number, please include the board name.

3. CORRECTION

: Corrected Portion

DISASSEMBLY

Page 36

2-2. REMOVAL OF THE TA-36/37 BOARD

1) Remove the three screws (BVTP3 x 8) ❶.

2) Remove the claw ❷ in the direction shown by the arrow Ⓐ, then remove the TA-36/37 board ❸ in the direction shown by the arrow Ⓑ.

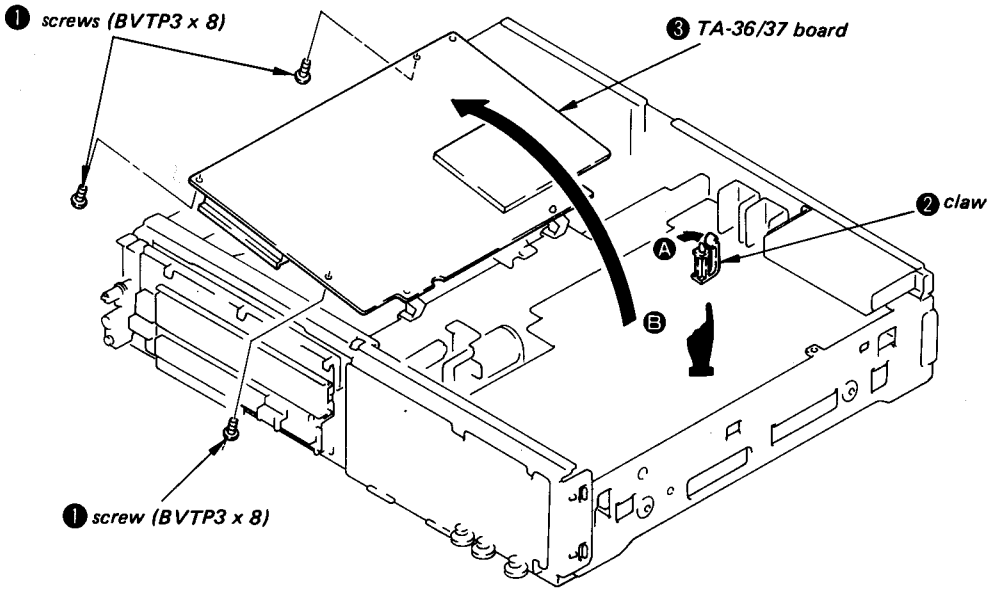

2-3. REMOVAL OF THE SS-50 BOARD

1) Remove the TA-36/37 baord. (Refer to section 2-2. REMOVAL OF THE TA-36/37 BOARD.)
2) Remove the knob ❶.
3) Remove the two screws (BVTP3 x 8) ❷.
4) Remove the RF modulator ❸.
5) Remove the four screws ❹.
6) Remove the SS-50 board ❺ in the direction shown by the arrow.

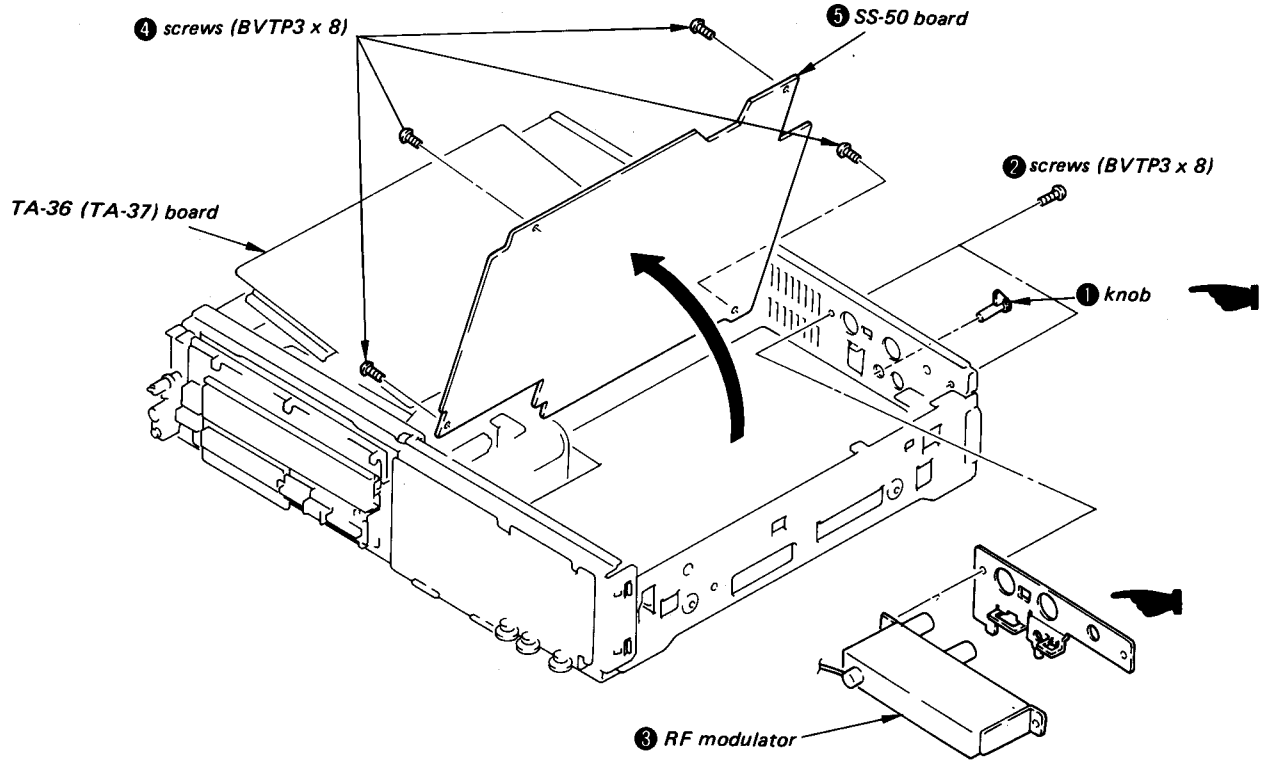

2-6. REMOVAL OF THE FL-8, FL-9 BOARD

1) Remove the one screw (BVTP3 x 8) ❶.
2) Remove the level meter board ❷.
3) Pull out the connector ❸.
4) Remove the two screws ❹.
5) Pull out the connector ❺.
6) Remove the four claws ❻ in the direction shown by the arrow Ⓐ, then remove the FL-8 board ❼ in the direction shown by the arrow Ⓑ.
7) Remove the two screws (BVTP3 x 8) ❽.
8) Remove the FL-9 board ❾.
9) Pull out the two connectors ❿.

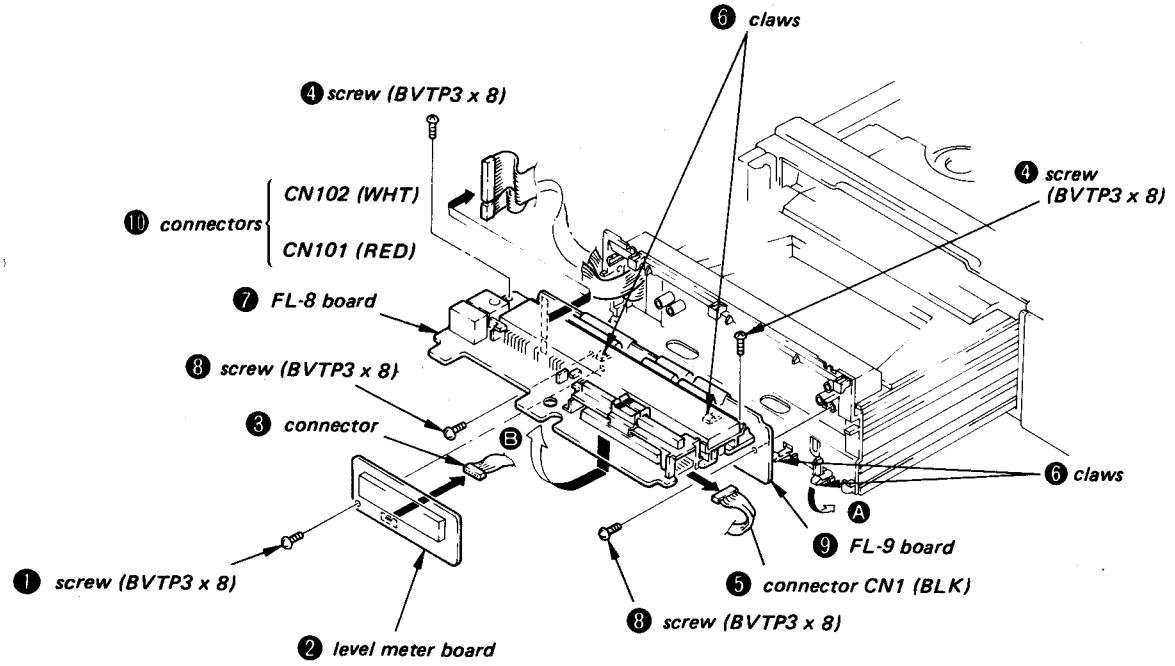

ADJUSTMENTS (SUPPLEMENT-1)

Page 43

3) RF Switching Position Adjustment (SS-50 Board)

Mode: Playback
Signal: Alignment tape colour-bar or monoscope
Oscilloscope: CH-1 TP304 (Pin (34) of IC301)
(RF SW PULSE)
CH-2 Pin (1) of CN309 (DRUM PG)

[Adjustment method]

i) PG (A) Edge
Adjust to 900 ±30 μsec with RV303.
(See Fig. 5-11 (a))

ii) PG (B) Edge
Adjust the duty cycle of RF SW PULSE to 50% ±5 μsec.

Page 49

16) Chroma Record Current Adjustment (YC-40 Board)

Mode: Record (PRO mode)
Signal: Colour-bar
Oscilloscope: Emitter of Q310 on DH-4 board.

[Adjustment method]

Adjust to 150 ±5 mVp-p with RV008.

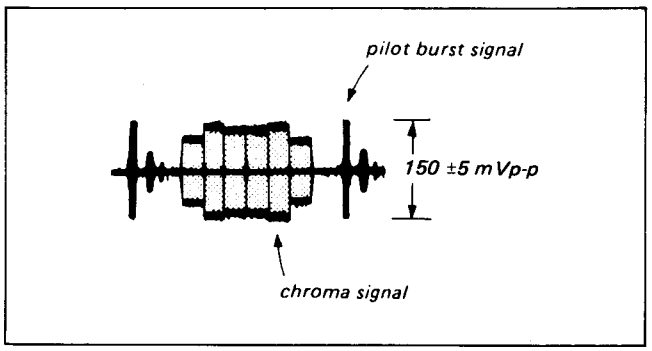

Fig. 5-30. Chroma record current adjustment